$4.40

City of Fife

Storm Water

Design and Construction

STANDARDS

March - 1993

Community Development Department

RECEIVED
APR 23 1993
CITY OF FIFE
PUBLIC WORKS DEPT.

ORIGINAL

STORM WATER DESIGN AND CONSTRUCTION STANDARDS

These Storm Water Design & Construction Standards are in addition to Fife Municipal Code 15.32, Drainage of Surface Water, Fife Municipal Code 15.36 Land Fill, and any other regulation in the Fife Municipal Code that may control the design and construction of storm water systems. You are advised to contact the City Engineer for additional information and make yourself familiar with the Fife Municipal Code.

RECEIVED
23 1993
CITY OF FIFE
PUBLIC WORKS DEPT.

ORIGINAL

ORIGINAL

CITY OF FIFE, WASHINGTON

ORDINANCE NO. ____

AN ORDINANCE OF THE FIFE CITY COUNCIL ADOPTING THE STORM WATER DESIGN AND CONSTRUCTION STANDARDS AND ESTABLISHING A NEW FIFE MUNICIPAL CODE CHAPTER 15.34

WHEREAS, the Engineering Division of the Community Development Department has prepared a set of standards for storm water design and construction; and

WHEREAS, the standards are applicable within the City of Fife; and

WHEREAS, the Community Development Director has completed his analysis of the Standards and has found that the public health, safety, and welfare would best be served by the adoption of the March 1993 Storm Water Design and Construction Standards; and

WHEREAS, the Council finds that the public health, safety and welfare of the public would be served by adopting the Community Director's recommendation; now therefore

THE CITY COUNCIL FOR THE CITY OF FIFE DO ORDAIN AS FOLLOWS:

Section 1. There is hereby created a new Chapter 15.34 to the Fife Municipal Code, which shall be entitled Storm Water Design and Construction Standards.

Section 2. There is hereby added a new section 15.34.010 which shall read as follows:

> The publication entitled "City of Fife Storm Water Design and Construction Standards", dated March, 1993 is hereby adopted by reference and no storm water system shall be installed within the City unless the equipment, material and installation meet the standards set forth in said publication.

Section 3. A true and correct copy of the City of Fife Storm Water Design and Construction Standards, March, 1993 edition is attached to the original of this ordinance. The City Clerk shall authenticate said copy and file the same, along with the original of this ordinance, in the official City records. The City clerk is further directed to keep at least one copy of said standards in the Clerk's office in order to be available for examination by the public.

Section 4. If any provision of this Ordinance is held invalid, such invalidity shall not effect any, which can be given effect without the invalid provision or application, and to this end the provisions of this Ordinance are declared to be severable.

Section 5. This Ordinance shall be in full force and effect five (5) days after its passage, approval and publication as provided by law. A summary of this Ordinance may be published in lieu of publishing the Ordinance in its entirety.

RECEIVED
MAR 23 1993
CITY OF FA
PUBLIC WORKS DE

ORIGINAL

Introduced on the ____ day of _____, 1993, passed by the City Council on the ____ day of _____,1993, and approved by the Mayor on the ____ day of _____, 1993.

_____
W. Carl Stegman, Mayor

ATTEST:

APPROVED AS TO FORM:

_____
Shirlee Kinney
City Clerk

_____
Loren D. Combs
City Attorney

Published: _____

NEW ADDITION

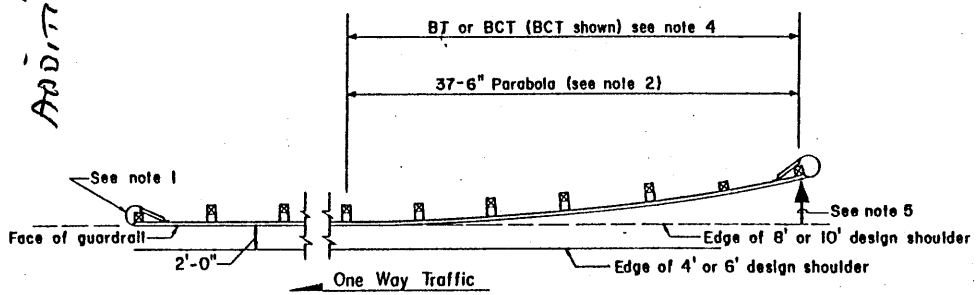

CASE 1

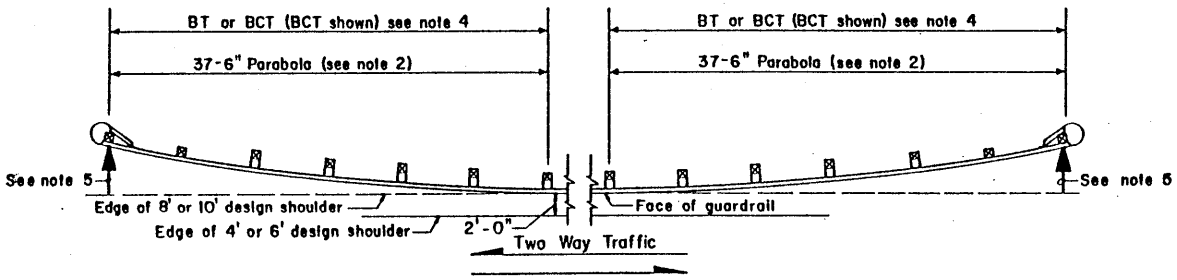

CASE 2

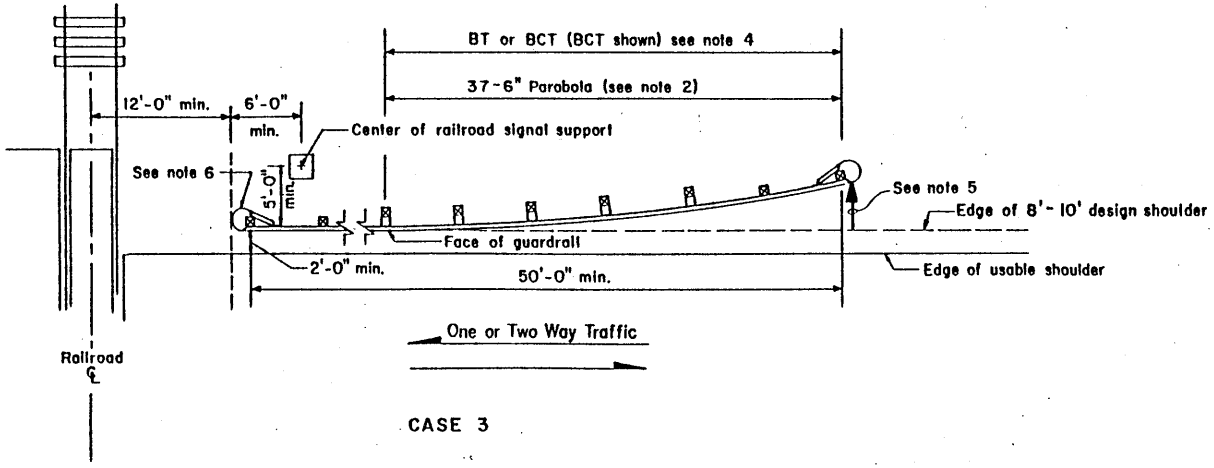

CASE 3

NOTES:

1. Type 4 anchor required. For terminal details, see applicable standard plan(s).
2. For parabola details and offset distances, see applicable standard plan(s)
3. Post spacing is 6'-3" unless otherwise shown.
4. For Buried Terminal (BT) or Breakaway Cable Terminal (BCT) details, see applicable standard plan(s). If the Buried Terminal is used a 12:1 flare rate should not be exceeded.
5. The slope into the face of the guardrail should not exceed 10:1.
6. For one way traffic use Type 4 anchor. For two way traffic use Type 1 anchor. See applicable standard plan(s) for anchor details.

GUARDRAIL PLACEMENT

INDEX

TRASH RACK DETAIL 1
CATCH BASIN TYPE 1L 2
CATCH BASIN TYPE 1P PARKING LOT 3
CATCH BASIN TYPE 2, 72 AND 96 INCH 4
FLOW RESTRICTOR/OIL POLLUTION CONTROL 5
CATCH BASIN INLET DETAIL 6
STANDARD DRY WAX DETAIL 7
STORM WATER INFILTRATION TRENCH DETAIL 8
STANDARD BASIN DETAIL 9
CLOSED DETENTION PIPE DETAIL 10
SILTATION FENCE DETAIL 11
DISPERSAL TRENCH DETAIL 12
DITCH DETAIL 13
ROCK WALL DETAIL 14
PATCH DETAIL (ASPHALT) 15
PATCH DETAIL (CONCRETE) 16

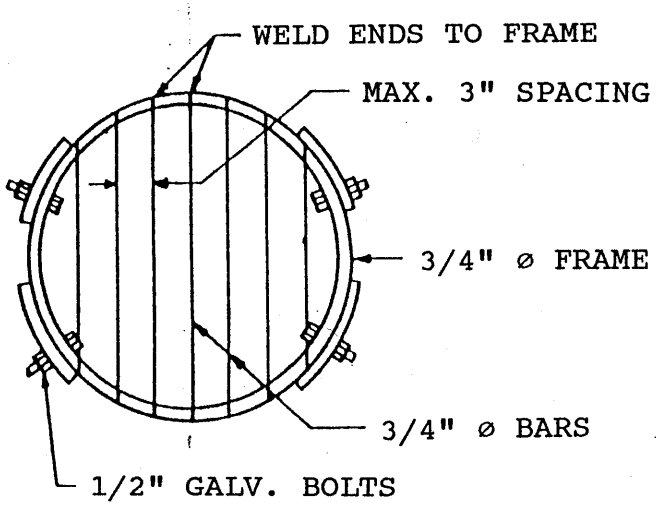

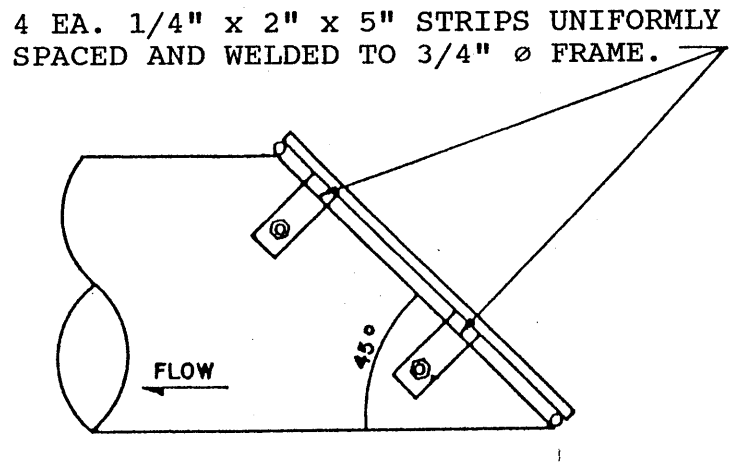

18" AND LARGER PIPE

NOTE: ALL STEEL PARTS TO BE GALVANIZED AND ASPHALT COATED (TREATMENT I OR BETTER).

TRASH RACK DETAIL

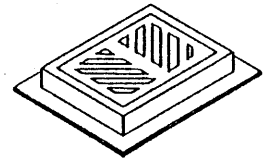

FRAME AND GRATE
(SEE STANDARD PLAN FOR DETAILS)

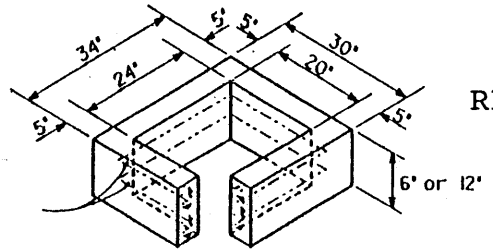

RISER SECTION

1 - #3 BAR HOOP FOR 6"
2 - #3 BAR HOOP FOR 12"

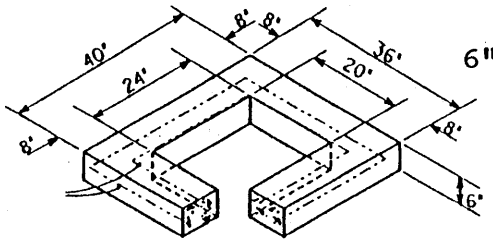

6" REDUCING SECTION

2 - #3 BAR HOOP

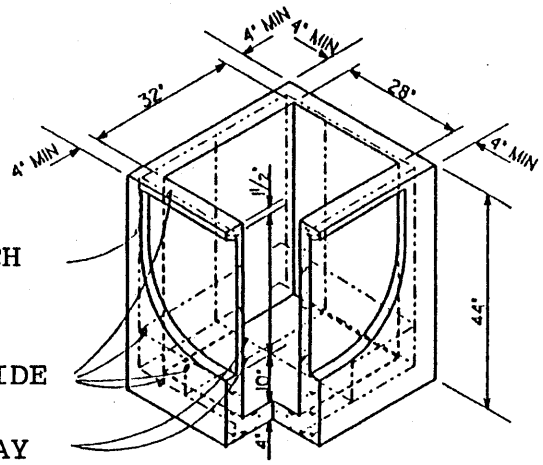

PRECAST BASE SECTION
(MEASUREMENT AT THE TOP OF THE BASE)

#3 BAR EACH CORNER

#3 BAR EACH SIDE

#3 BAR EACH WAY

NOTES:

CATCH BASINS TO BE CONSTRUCTED IN ACCORDANCE WITH ASTM C 478 (AASHTO M 199) & ASTM C 890 UNLESS OTHERWISE SHOWN ON PLANS OR NOTED IN THE STANDARD SPECIFICATIONS.

AS AN ACCEPTABLE ALTERNATE TO REBAR, WELDED WIRE FABRIC HAVING A MINIMUM AREA OF 0.12 SQUARE INCHES PER FOOT MAY BE USED. WELDED WIRE FABRIC SHALL COMPLY TO ASTM A 497 (AASHTO M 221). WIRE FABRIC SHALL NOT BE PLACED IN THE KNOCKOUT.

THE BOTTOM OF THE PRECAST BASE SECTION MAY BE ROUNDED.

PRECAST BASES SHALL BE FURNISHED WITH CUTOUTS OR KNOCKOUTS. KNOCKOUTS SHALL HAVE A WALL THICKNESS OF 2" MINIMUM.

KNOCKOUTS MAY BE ON ALL 4 SIDES WITH MAXIMUM DIAMETER OF 28". KNOCKOUTS MAY BE EITHER ROUND OR "D" SHAPE. PIPE TO BE INSTALLED IN FACTORY SUPPLIED KNOCKOUTS.

KNOCKOUT FOR CUTOUT HOLE SIZE IS EQUAL TO PIPE OUTER DIAMETER PLUS CATCH BASIN WALL THICKNESS.

THE TAPER ON THE SIDES OF THE PRECAST BASE SECTION AND RISER SECTION SHALL NOT EXCEED 1/2" PER FOOT.

CATCH BASIN FRAME AND GRATE SHALL BE IN ACCORDANCE WITH STANDARD SPECIFICATIONS AND SHALL MEET THE STRENGTH REQUIREMENTS OF FEDERAL SPECIFICATION RR-F-621D. MATING SURFACES SHALL BE FINISHED TO ASSURE NON-ROCKING FIT.

FRAME AND GRATE MAY BE INSTALLED WITH FLANGE DOWN OR CAST INTO RISER.

CATCH BASIN TYPE IL

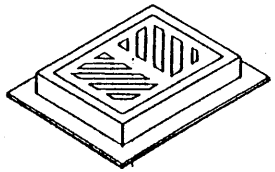

FRAME AND GRATE
(SEE STANDARD PLAN FOR DETAILS)

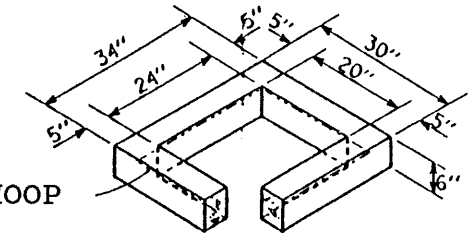

6" RISER SECTION

1 - #3 BAR HOOP

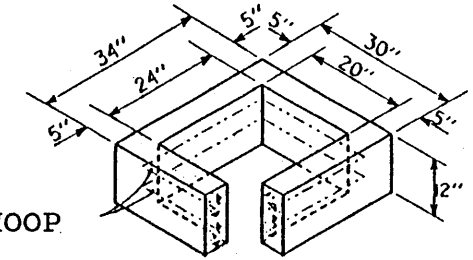

12" RISER SECTION

2 - #3 BAR HOOP

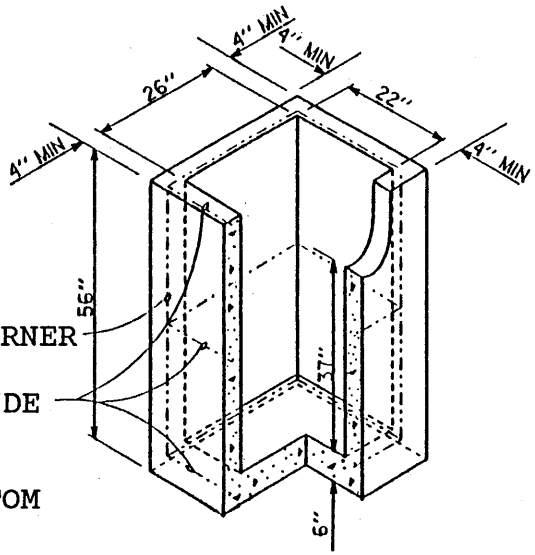

PRECAST BASE SECTION
(MEASUREMENT AT THE TOP OF THE BASE)

#3 BAR EACH CORNER

#3 BAR EACH SIDE

#3 BAR IN BOTTOM

NOTES:

CATCH BASINS TO BE CONSTRUCTED IN ACCORDANCE WITH ASTM C 478 (AASHTO M 199) & ASTM C 890 UNLESS OTHERWISE SHOWN ON PLANS OR NOTED IN THE STANDARD SPECIFICATIONS.

AS AN ACCEPTABLE ALTERNATE TO REBAR, WELDED WIRE FABRIC HAVING A MINIMUM AREA OF 0.12 SQUARE INCHES PER FOOT MAY BE USED. WELDED WIRE FABRIC SHALL COMPLY TO ASTM A 497 (AASHTO M 221). WIRE FABRIC SHALL NOT BE PLACED IN THE CUTOUTS.

THE BOTTOM OF THE PRECAST BASE SECTION MAY BE ROUNDED.

CUTOUTS MAY BE ON ALL 4 SIDES WITH MAXIMUM DIAMETER OF 14". CUTOUTS MAY BE EITHER ROUND OR "D" SHAPE. PIPE TO BE INSTALLED IN FACTORY SUPPLIED CUTOUTS.

THE TAPER ON THE SIDES OF THE PRECAST BASE SECTION AND RISER SECTION SHALL NOT EXCEED 1/2" PER FOOT.

CATCH BASIN FRAME AND GRATE SHALL BE IN ACCORDANCE WITH STANDARD SPECIFICATIONS AND MEET THE STRENGTH REQUIREMENTS OF FEDERAL SPECIFICATION RR-F-621D. MATING SURFACES SHALL BE FINISHED TO ASSURE NON-ROCKING FIT.

FRAME AND GRATE MAY BE INSTALLED WITH FLANGE DOWN OR CAST INTO RISER.

CATCH BASIN TYPE 1P
PARKING LOT C.B.

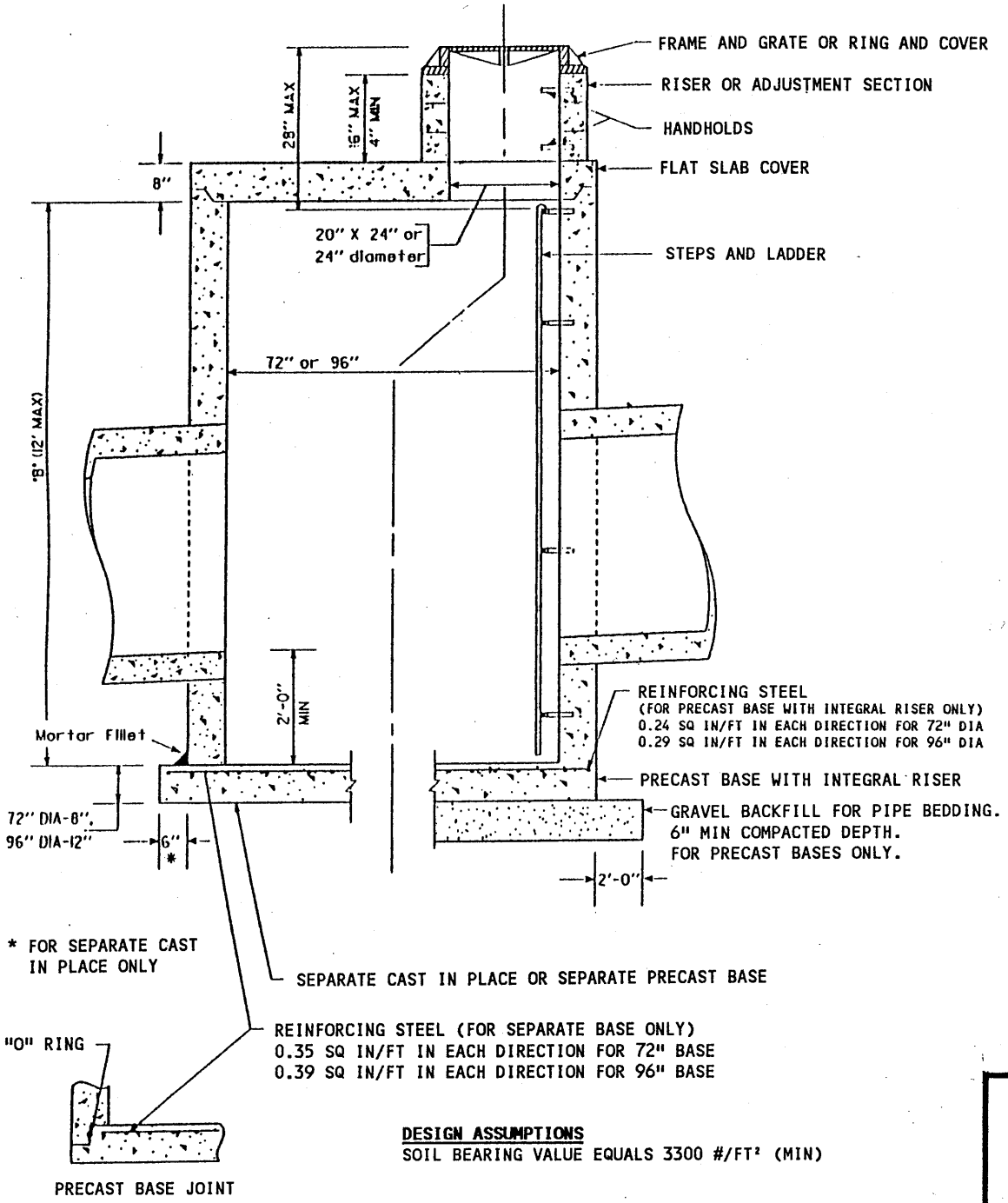

DESIGN ASSUMPTIONS
SOIL BEARING VALUE EQUALS 3300 #/FT² (MIN)

NOTES:

CATCH BASINS TO BE INSTALLED IN ACCORDANCE WITH ASTM C 478 (AASHTO M 199). & ASTM C 890 UNLESS OTHERWISE SHOWN ON PLANS OR NOTED IN THE STANDARD SPECIFICATIONS.

HANDHOLDS IN RISER OR ADJUSTMENT SECTION SHALL HAVE 3" MINIMUM CLEARANCE. STEPS IN CATCH BASIN SHALL HAVE 6" MINIMUM CLEARANCE. NO STEPS ARE REQUIRED WHEN "B" IS 4' OR LESS.

ALL REINFORCED CAST IN PLACE CONCRETE SHALL BE CLASS A. ALL PRECAST CONCRETE SHALL OBTAIN 4000 PSI @ 28 DAYS.

PRECAST BASES SHALL BE FURNISHED WITH CUTOUTS OR KNOCKOUTS. KNOCKOUTS SHALL HAVE A WALL THICKNESS OF 2" MINIMUM.

KNOCKOUT OR CUTOUT HOLE SIZE IS EQUAL TO PIPE OUTER DIAMETER PLUS CATCH BASIN WALL THICKNESS. MAXIMUM HOLE SIZE IS 60" FOR 72" CATCH BASIN. 84" FOR 96" CATCH BASIN. MINIMUM DISTANCE BETWEEN HOLES IS 12".

FRAME AND GRATE OR RING AND COVER SHALL BE IN ACCORDANCE WITH STANDARD SPECIFICATIONS AND MEET THE STRENGTH REQUIREMENTS OF FEDERAL SPECIFICATION RR-F-621D. MATING SURFACES SHALL BE FINISHED TO ASSURE NON-ROCKING FIT.

ALL BASE REINFORCING STEEL SHALL HAVE A MINIMUM YIELD STRENGTH OF 60,000 PSI AND BE PLACED IN THE UPPER HALF OF THE BASE WITH 1" MINIMUM CLEARANCE.

THE BOTTOM OF THE PRECAST CATCH BASIN MAY BE ROUNDED.

FOR DETAILS SHOWING FRAME AND GRATE, RING AND COVER SEE STANDARD PLAN "METAL FRAME AND GRATE FOR CATCH BASIN INLET".

FOR DETAILS SHOWING LADDER, STEPS, HANDRAIL AND TOP SLAB SEE STANDARD PLAN "MISCELLANEOUS CATCH BASIN DETAILS".

FRAME AND GRATE MAY BE INSTALLED WITH FLANGE DOWN OR CAST INTO RISER.

CATCH BASIN TYPE 2
72" & 96"

THIS DETAIL TO BE SHOWN AND CONSTRUCTED
WHEN PROFILE GRADE EQUALS OR EXCEEDS 6%.

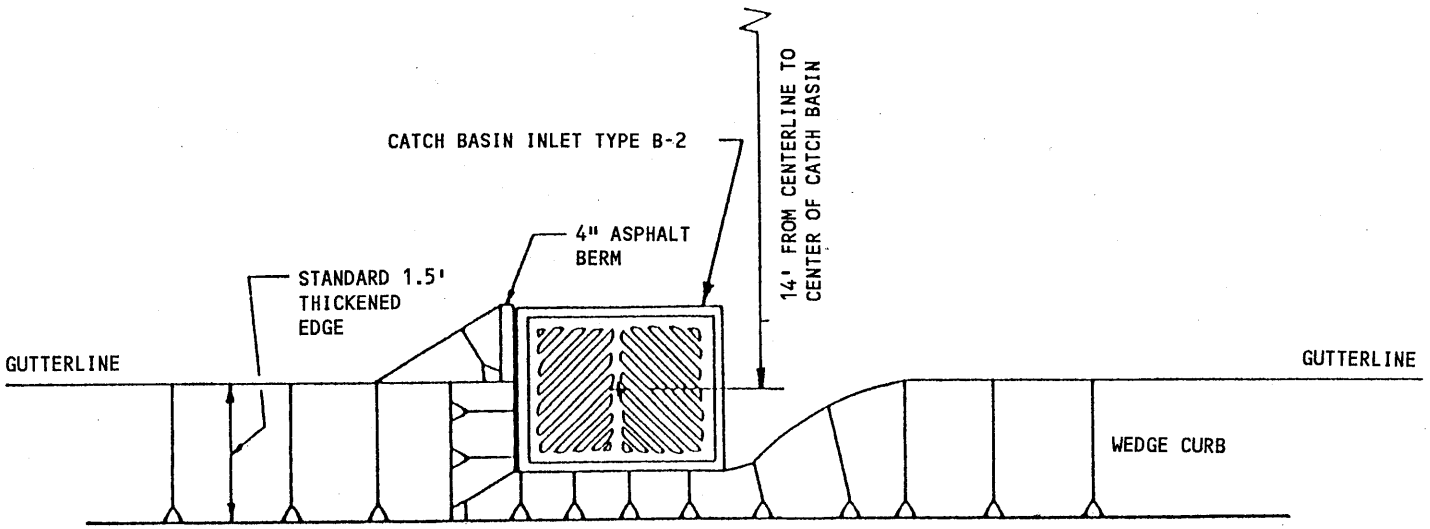

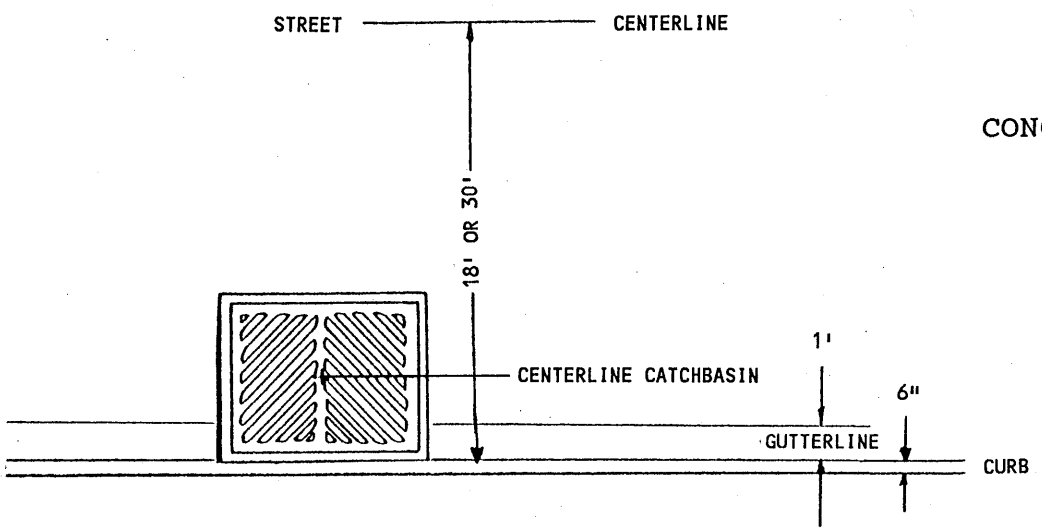

CONCRETE CURB INLET

CATCH BASIN INLET DETAIL

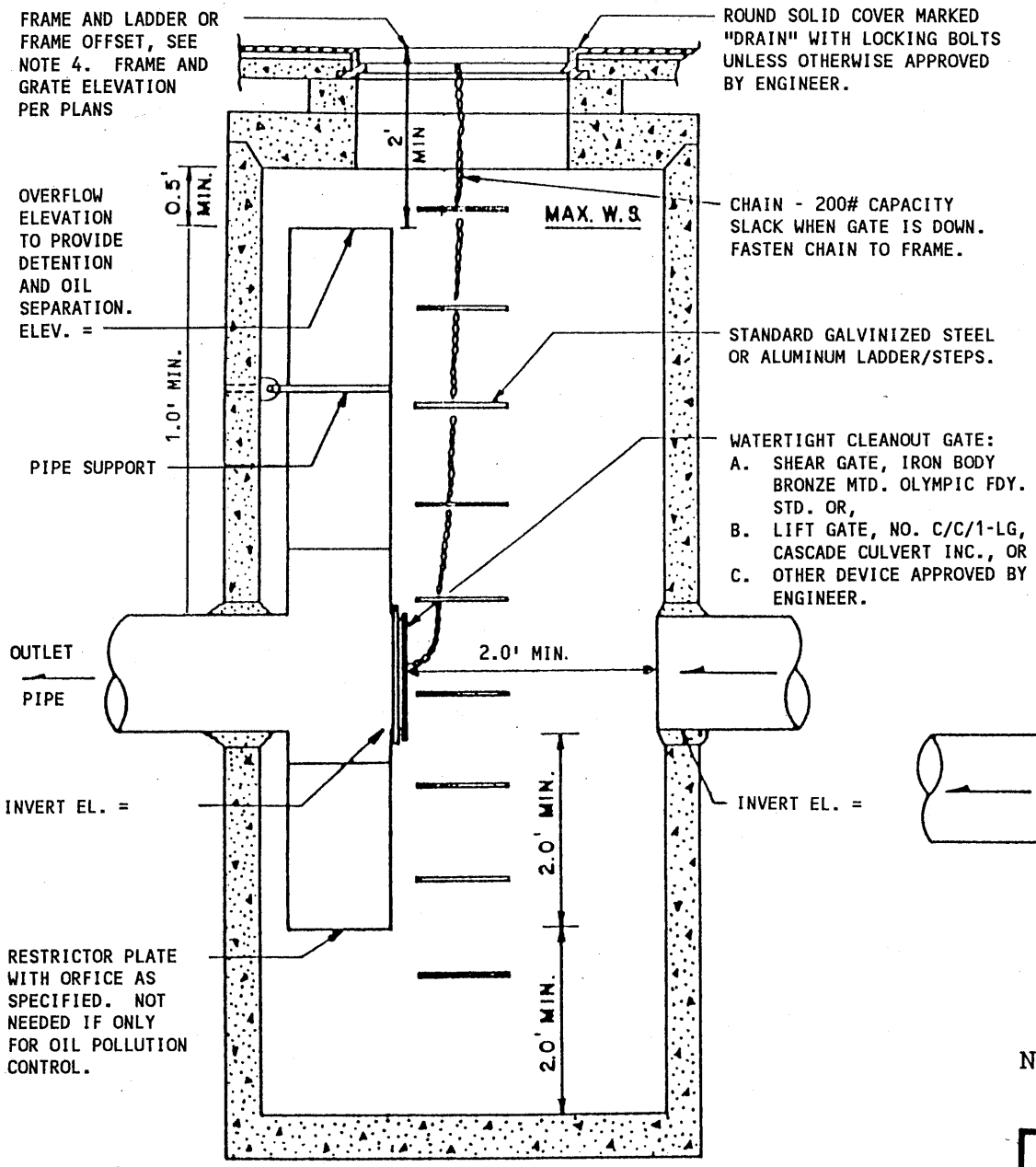

NOTES:

1. PIPE SIZES AND SLOPES, PER PLANS.
2. OUTLET CAPACITY NOT LESS THAN COMBINED INLETS.
3. METAL PARTS:
   A. CORROSION RESISTANT, GALVINIZED, OR ALUMINUM TYPE 2.
   B. IF GALVINIZED STEEL PIPE, HAVE ASPHALT TREATMENT I.
4. FRAME AND LADDER OR STEPS OFFSET SO:
   A. CLEANOUT GATE IS VISIBLE FROM TOP.
   B. CLIMBDOWN SPACE IS CLEAR OF RISER AND CLEANOUT GATE.
5. STRUCTURE SHALL BE A TYPE 2 CATCH BASIN, 54" DIAMETER MINIMUM.

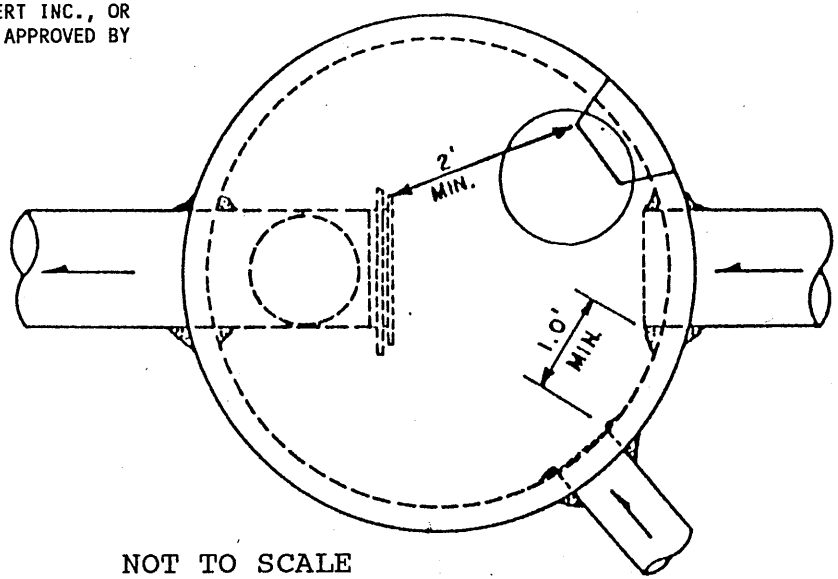

NOT TO SCALE

FLOW RESTRICTOR/ OIL POLLUTION CONTROL DEVICE

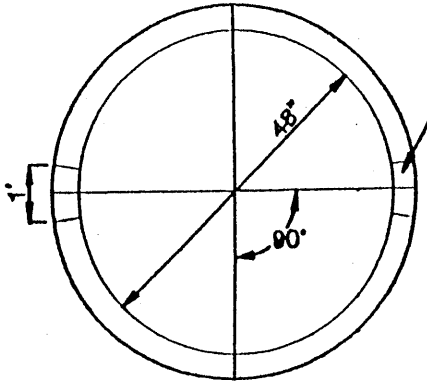

REMOVE 1' SECTION OF JOINT ON EACH RING AT FOUR LOCATIONS AS SHOWN (SEE JOINT DETAIL).

PLAN OF RING SECTION

TOP UNIT DETAIL

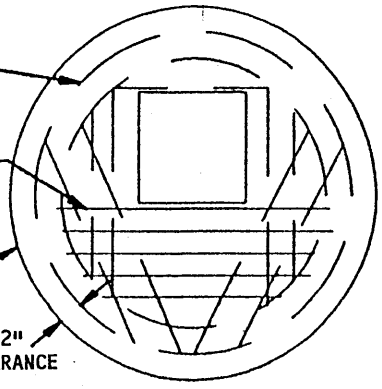

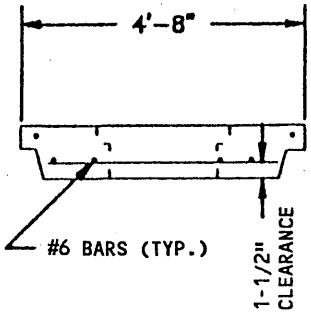

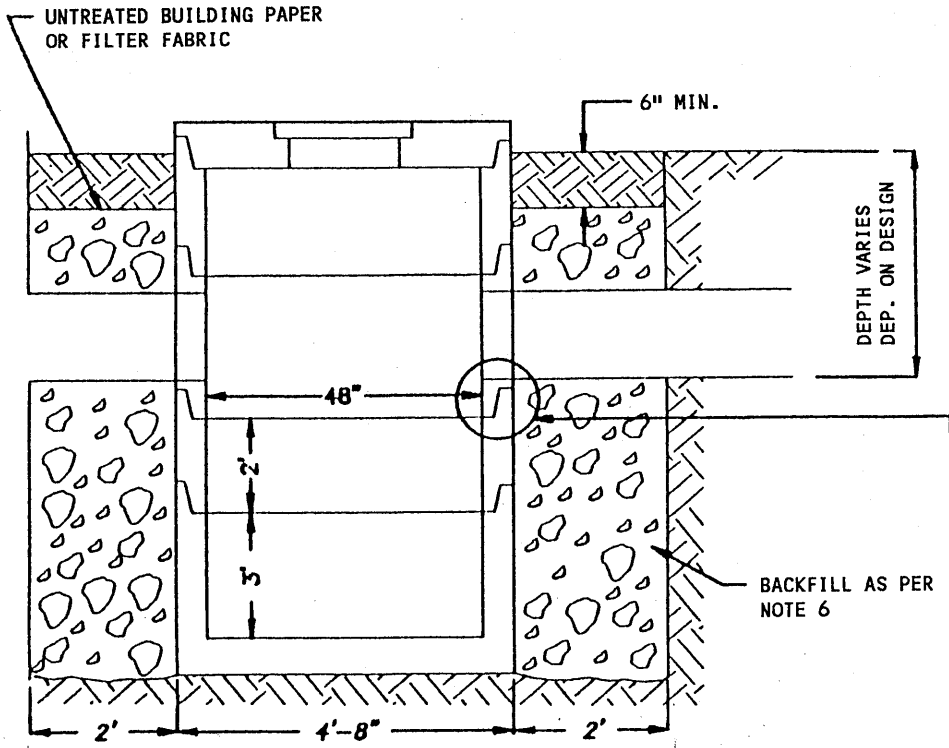

JOINT DETAIL

REMOVE BELL AND LIP FOR 1' AT FOUR LOCATIONS TO PROVIDE FOR SEEPAGE AT EACH JOINT SECTION

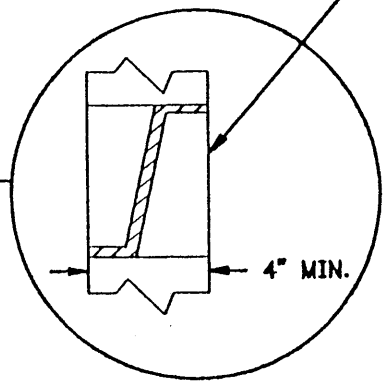

NOTES:

1. DRYWELL IS A TYPE II CATCH BASIN AND MODIFIED AS SHOWN.
2. DRYWELL TO BE BUILT IN 1' OR 2' SECTIONS ONLY. EXCEPT FOR BASE WHICH SHALL BE A 3' SECTION.
3. BASE SECTION TO BE PLACED ON STABLE GROUND.
4. EACH DRYWELL SYSTEM HALL HAVE AN OVERFLOW SYSTEM. SIZE TO BE DEPENDENT ON DESIGN CALCULATIONS.
5. TOP UNIT SHALL MEET W.S.D.O.T. SPECIFICATIONS FOR A TYPE 2 CATCH BASIN.
6. BACKFILL SHALL BE 3/4 INCH TO 2-1/2 INCHES WASHED GRAVEL. MATERIAL PASSING THE #40 SIEVE SHALL NOT EXCEED 2% BY WEIGHT.
7. FOR PERCOLATION TRENCH DETAIL SEE PAGE 5.

STANDARD DRYWELL DETAIL

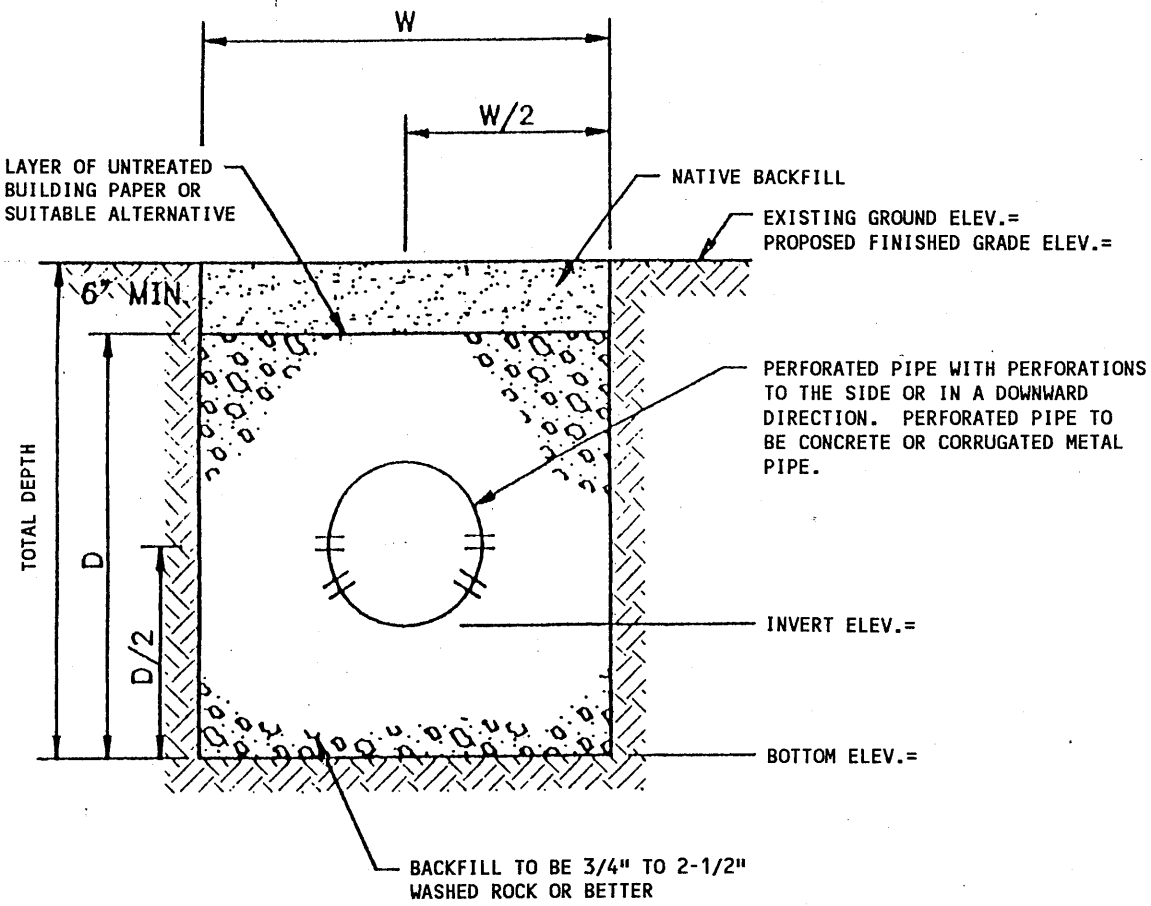

NOTES:

1. PIPE FOR STORM DRAIN PERCOLATION SYSTEMS SHALL MEET W.S.D.O.T. SPECIFICATIONS FOR ZINC-COATED (GALVANIZED) CORRUGATED IRON OR STEEL UNDERDRAIN PIPE (CHAPTER 9-04.2(4) OR PERFORATED CORRUGATED ALUMINUM ALLOY UNDERDRAIN PIPE (CHAPTER 9-04.2(5).

2. PERFORATED CONCRETE UNDERDRAIN PIPE MEETING W.S.D.O.T. SPECIFICATIONS CHAPTER 9.05.2(2) AND A.A.S.H.T.O. DESIGNATED M175, TYPE M1, MAY BE USED WITH THE ADDITIONAL CONDITIONS: THE PERFORATIONS SHALL BE CIRCULAR AND A MINIMUM OF 1/2 INCH IN DIAMETER. THEY SHALL BE CLEANLY CUT AND THE INSIDE AND OUTSIDE OF THE PIPE SHALL BE PERFECTLY SMOOTH AND UNIFORM WITH NO EXCESS CONCRETE LEFT FROM THE HOLE PERFORATIONS PROCESS. THERE SHALL BE A MINIMUM OF 7 SETS OF PERFORATIONS WITH 2 PER SET OF PERFORATIONS FOR EACH 3-1/2 FEET OF PIPE LENGTH. RUBBER GASKETS OR GROUTING OF JOINTS FOR PERFORATED PIPE RUNS WILL NOT BE REQUIRED. INSPECTION OF THE PERFORATED CONCRETE PIPE SHALL BE MADE BY THE CITY BEFORE INSTALLATION OF THE PIPE IN THE GROUND.

STORMWATER INFILTRATION TRENCH SECTION

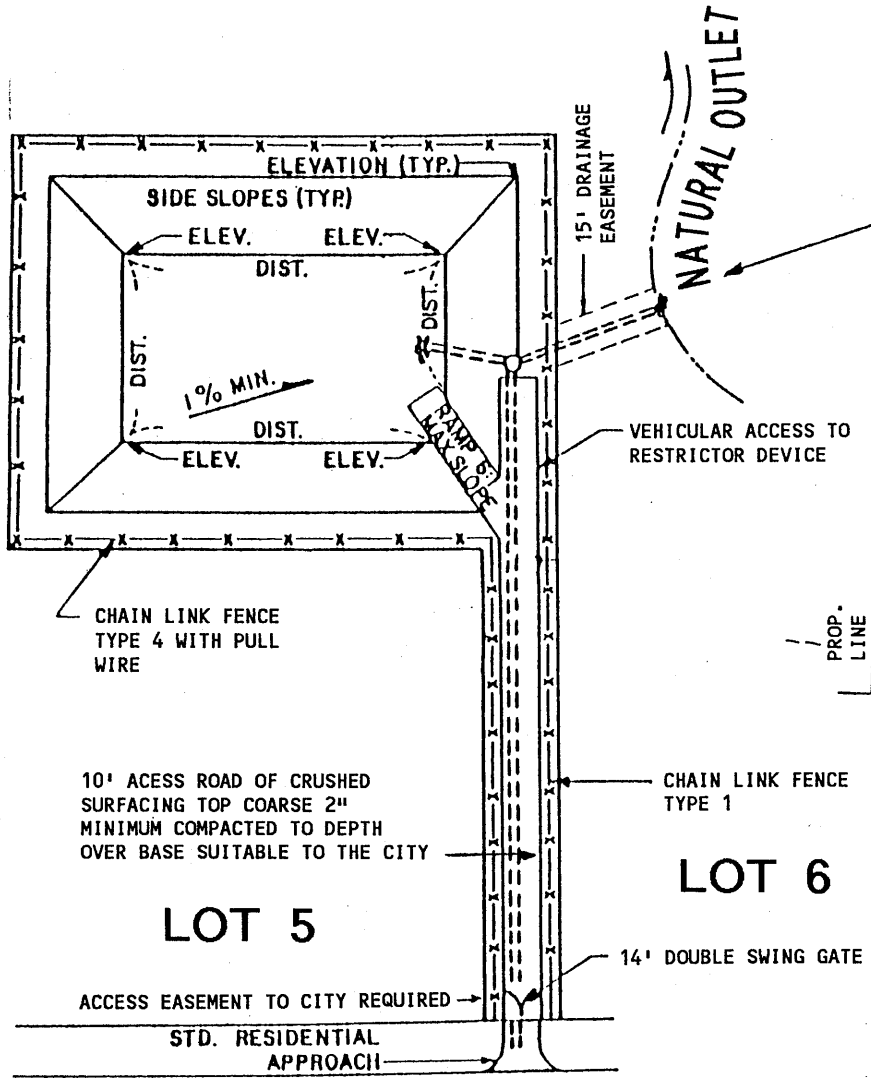

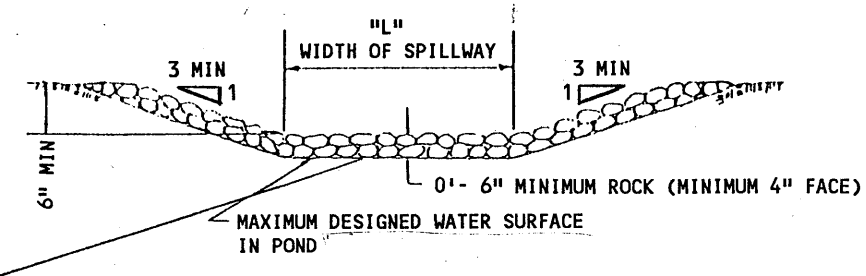

TYPICAL DETENTION POND DETAIL

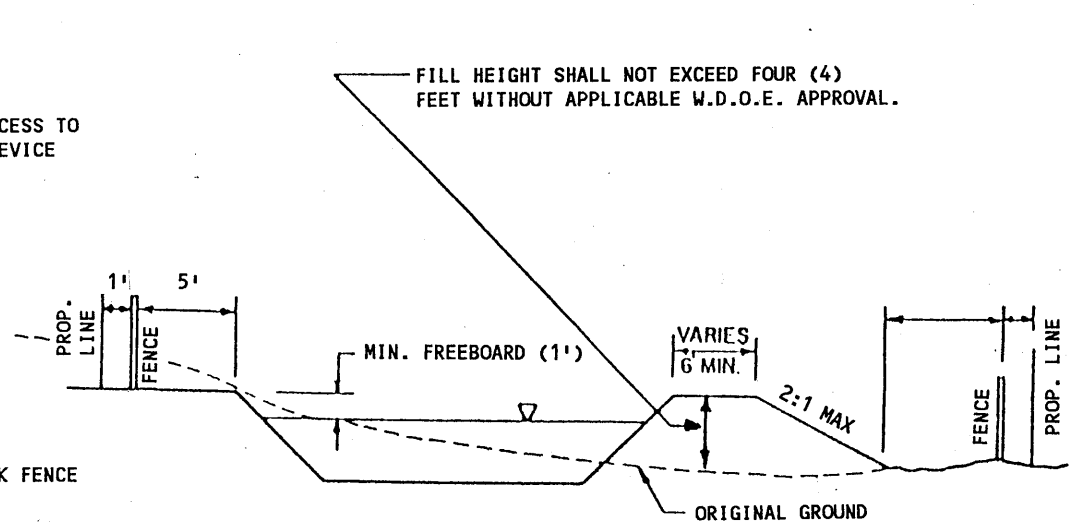

TYPICAL POND OVERFLOW SPILLWAY

SCALE: 1" = 20' HORIZONTAL
1" = 2' VERTICAL

NOTES:

1. ALL EMBANKMENT TO BE COMPACTED

2. CONSTRUCTION PLANS TO SHOW ALL DIMENSIONS, SLOPES AND ELEVATIONS.

STANDARD BASIN DETAIL

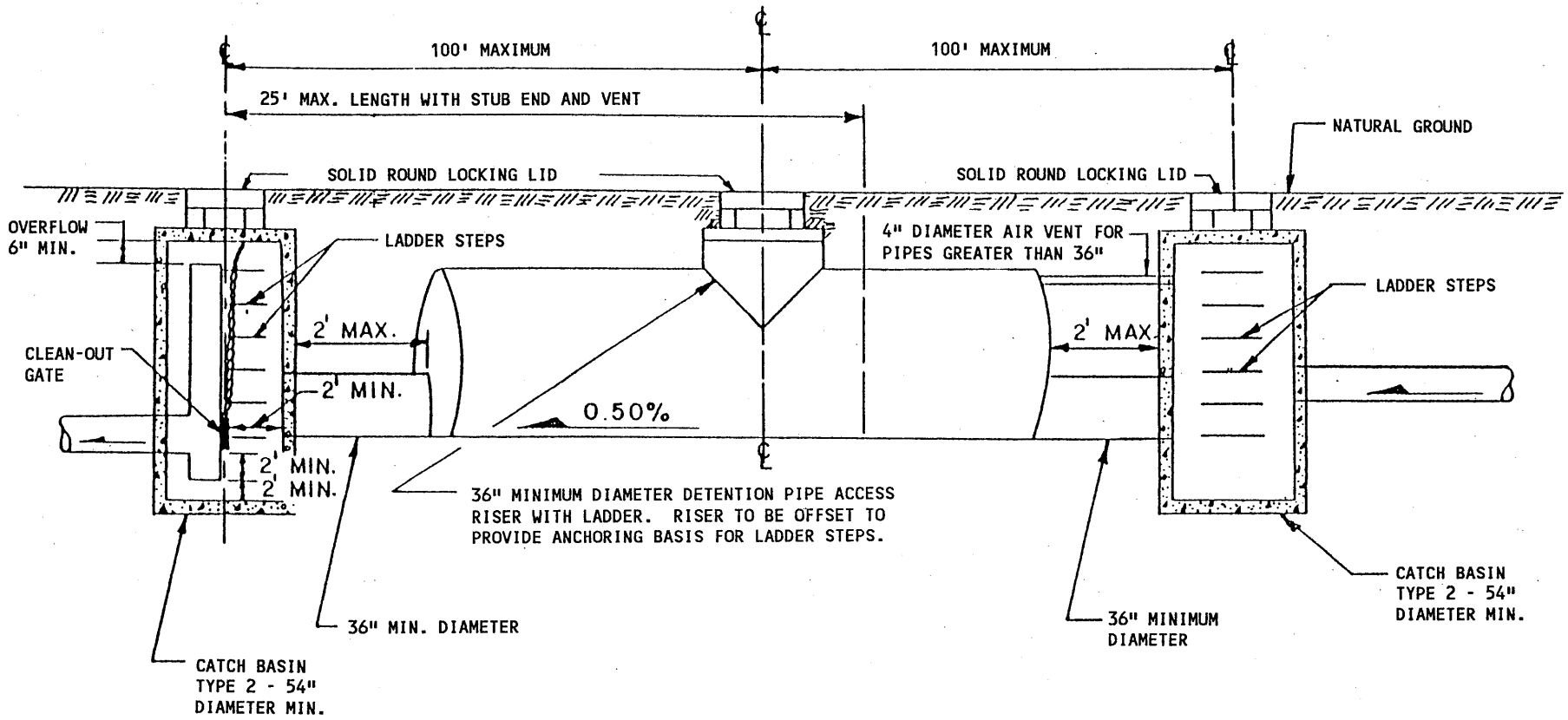

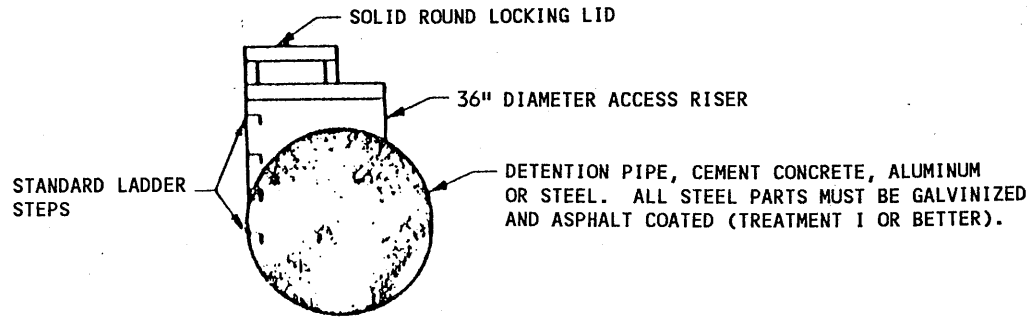

SECTION THRU ACCESS PORTAL

NO SCALE

TYPICAL CLOSED DETENTION PIPE DETAIL

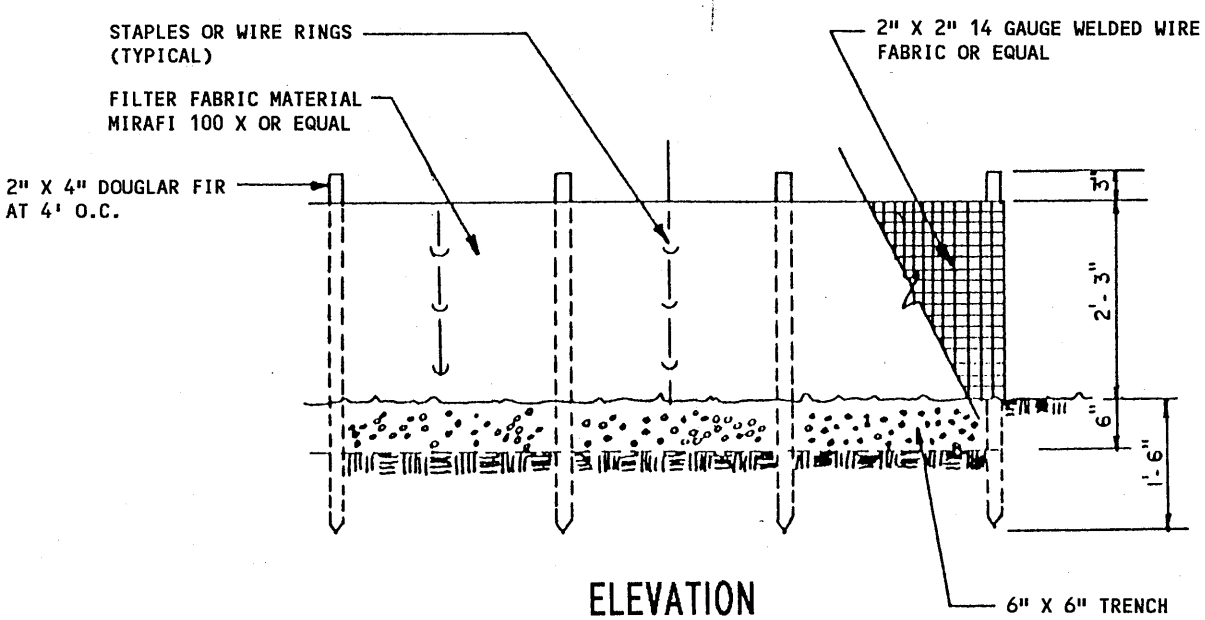

ELEVATION

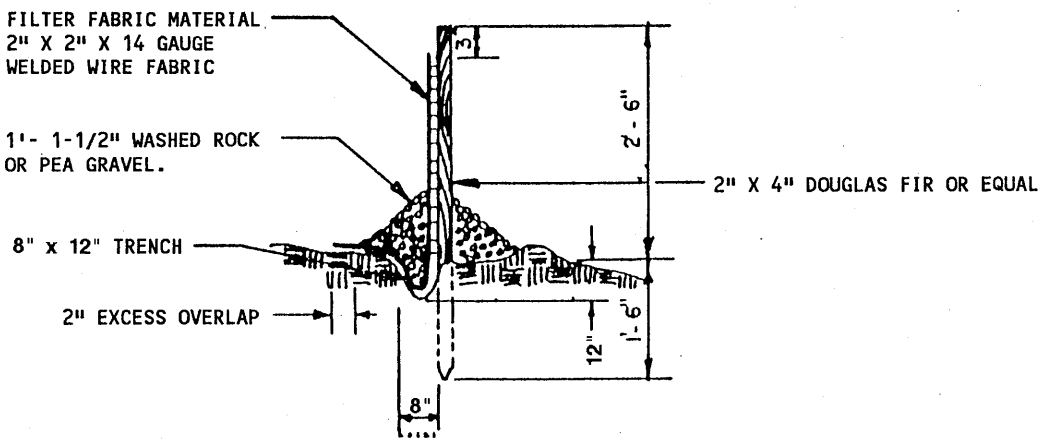

TYPICAL CROSS SECTION

NOTES:

1. PLACE 1' OF 3/4" TO 1-1/2" WASHED ROCK OR PEA GRAVEL ON BOTH SIDES OF FENCE TO CREATE A BEVEL SHAPE.
2. FABRIC SHALL COVER BOTTOM OF 6" X 6" TRENCH AND EXTEND BEYOND THE LIMITS OF THE GRAVEL IN ORDER TO MAINTAIN AN EXCESS OVERLAP OF 2" MINIMUM AS SHOWN IN TYPICAL CROSS-SECTION.

SILTATION FENCE DETAIL

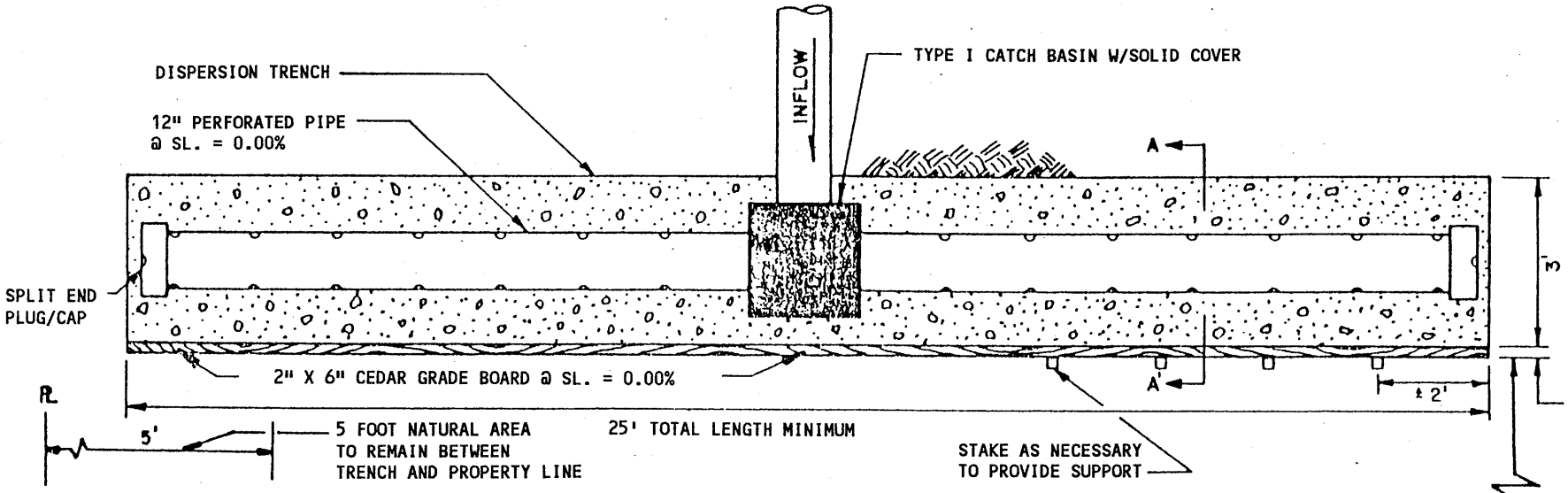

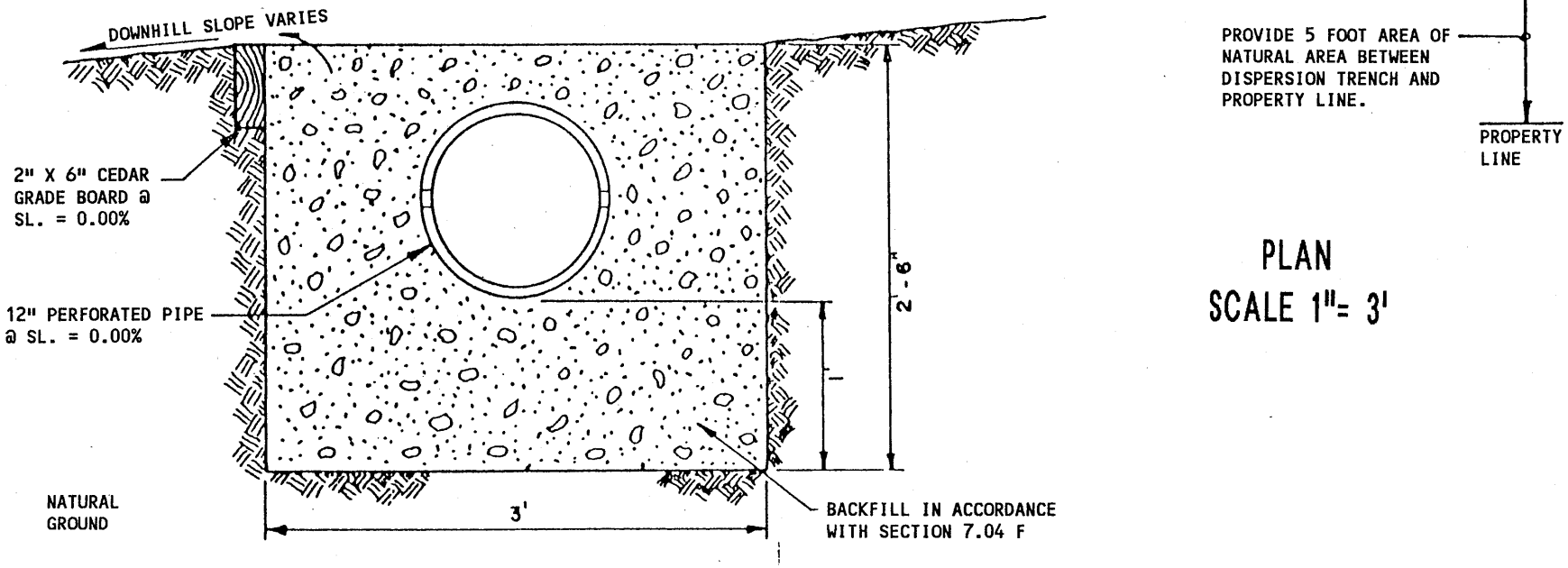

PLAN
SCALE 1" = 3'

SECTION A-A'
SCALE 1" = 1'

DISPERSAL TRENCH DETAIL

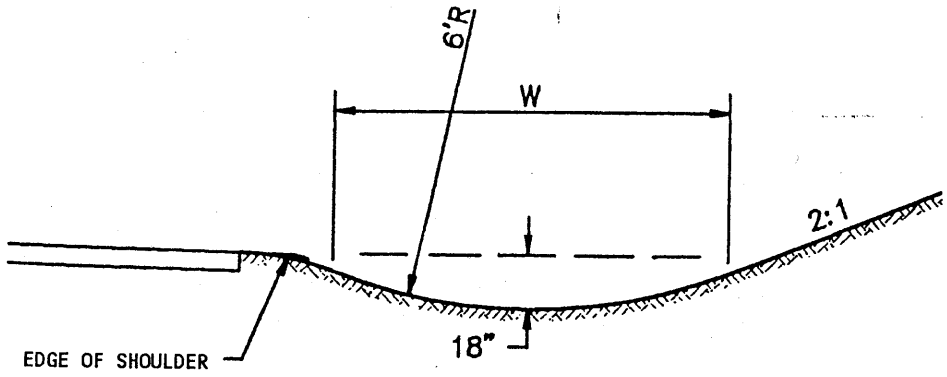

CIRCULAR

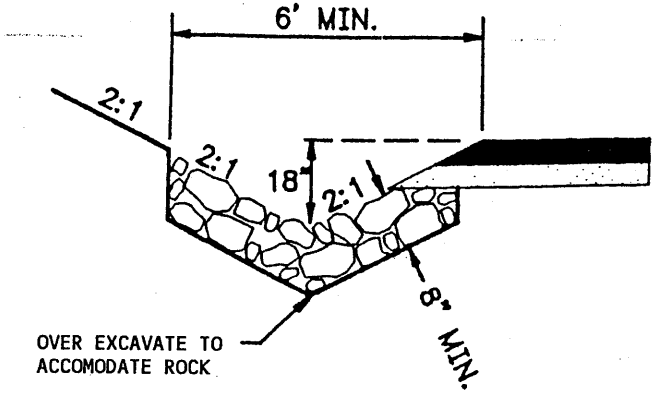

ROCK-LINED
TRIANGULAR OR
CIRCULAR DITCH

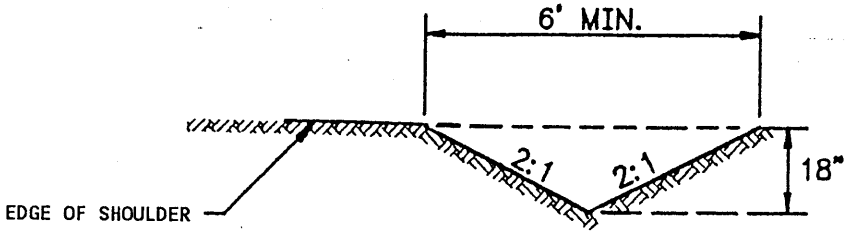

TRIANGULAR

DITCH DETAILS

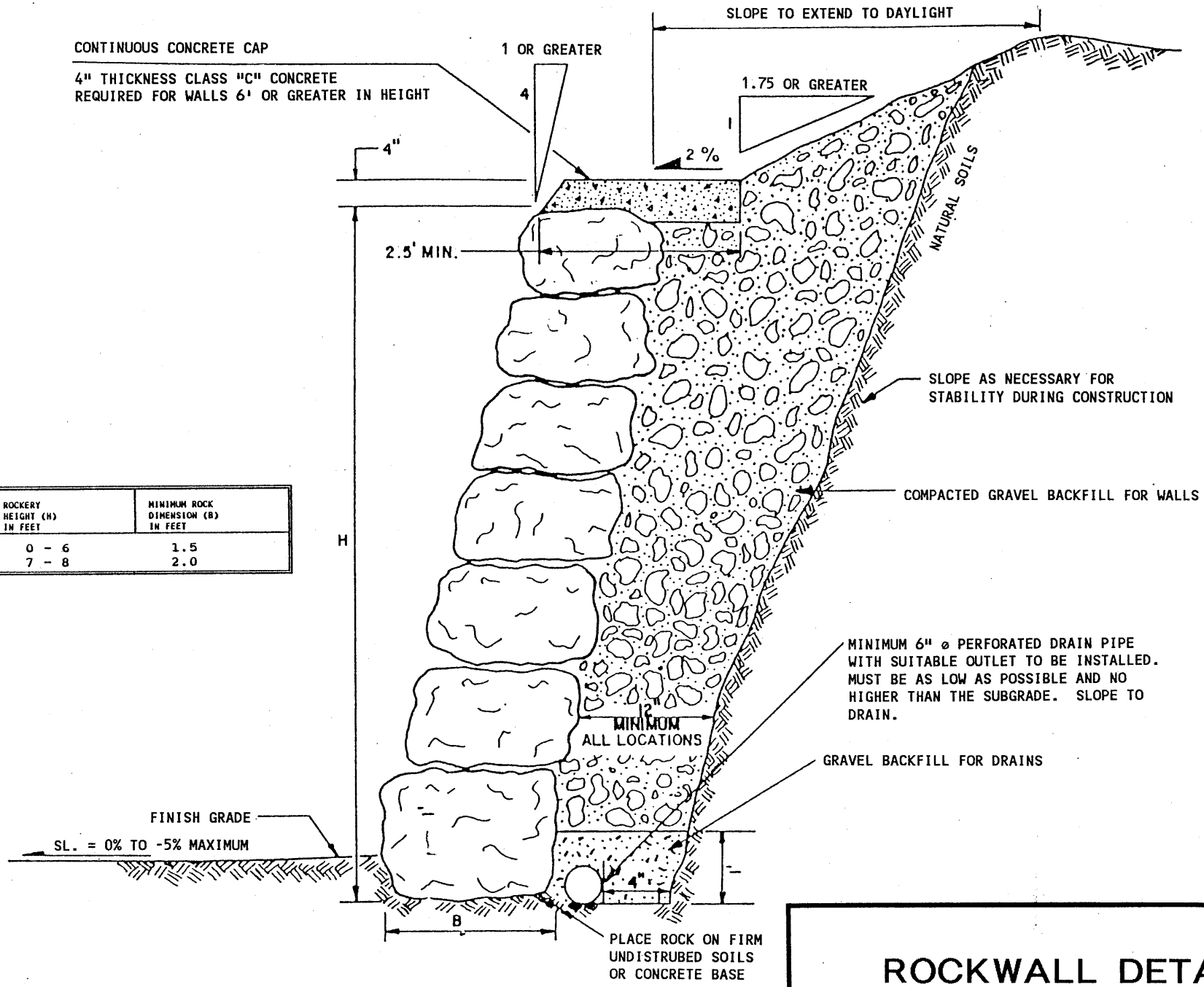

ROCKERY HEIGHT (H) IN FEET	MINIMUM ROCK DIMENSION (B) IN FEET
0 - 6	1.5
7 - 8	2.0

ROCKWALL DETAIL

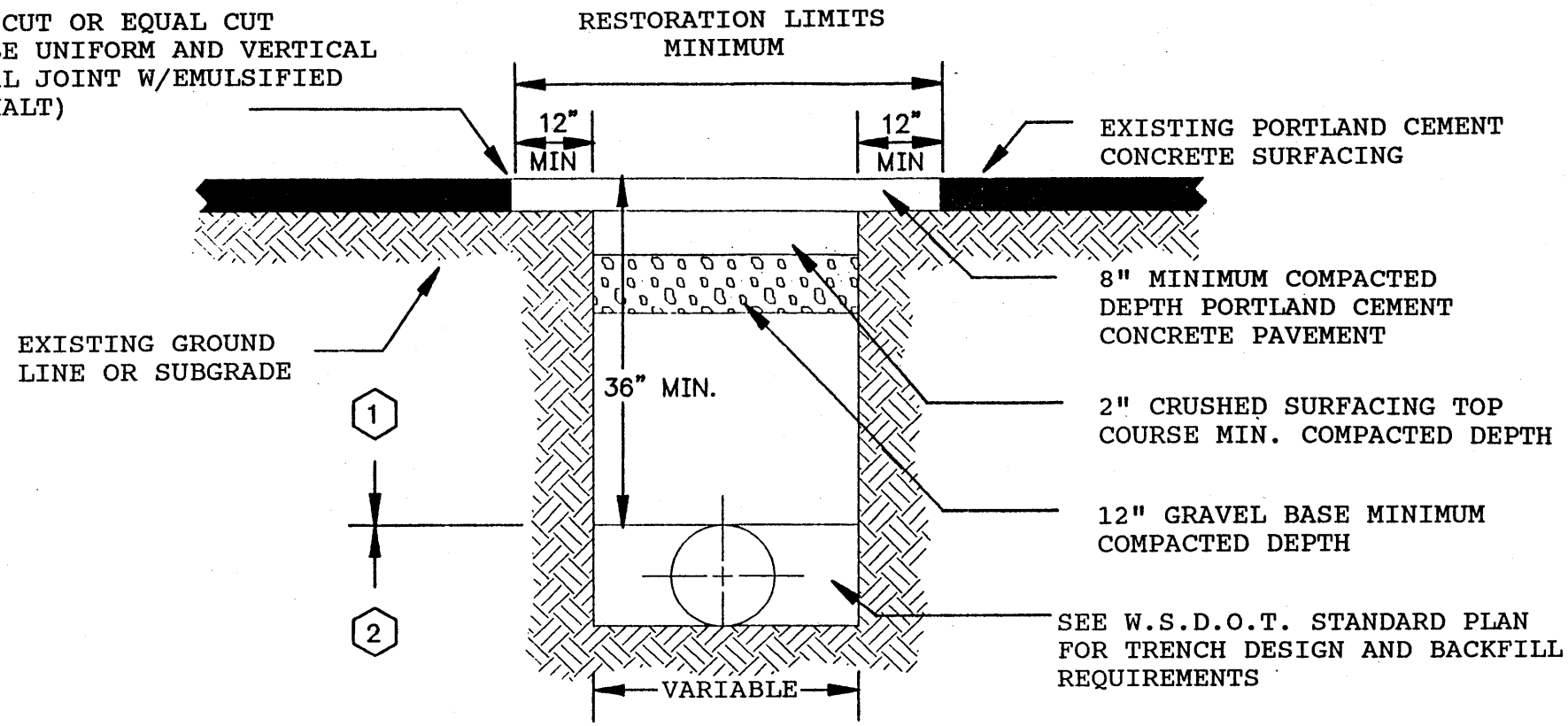

PATCH DETAIL

NO SCALE

NOTES:

1. ALL PATCHES ACROSS CITY ROADS, OR ROAD APPROACHES IN CITY RIGHT-OF-WAY SHALL CONFORM TO THIS DETAIL.

2. **TEMPORARY PATCH TO BE:**
   BACK FILLED AND COMPACTED TO EXISTING GROUND LINE AND PATCHED WITH TEMPORARY COLD MIX ASPHALT.

3. FOR LONGITUDINAL CUTS THE CITY MAY REQUIRE THE ENTIRE DRIVING LANE TO BE OVERLAID.

BACKFILL COMPACTION LEGEND

(1) BACKFILL MATERIAL PLACED IN 4" LIFTS AND COMPACTED TO 95% MAXIMUM DENSITY.

(2) BACKFILL MATERIAL PLACED IN 6" LIFTS AND COMPACTED TO 95% MAXIMUM DENSITY.

	ORIGINAL DRAWING		
	REVISIONS		

PORTLAND CEMENT CONCRETE PATCH DETAIL FOR ALL UTILITY ROAD CUTS FIGURE II

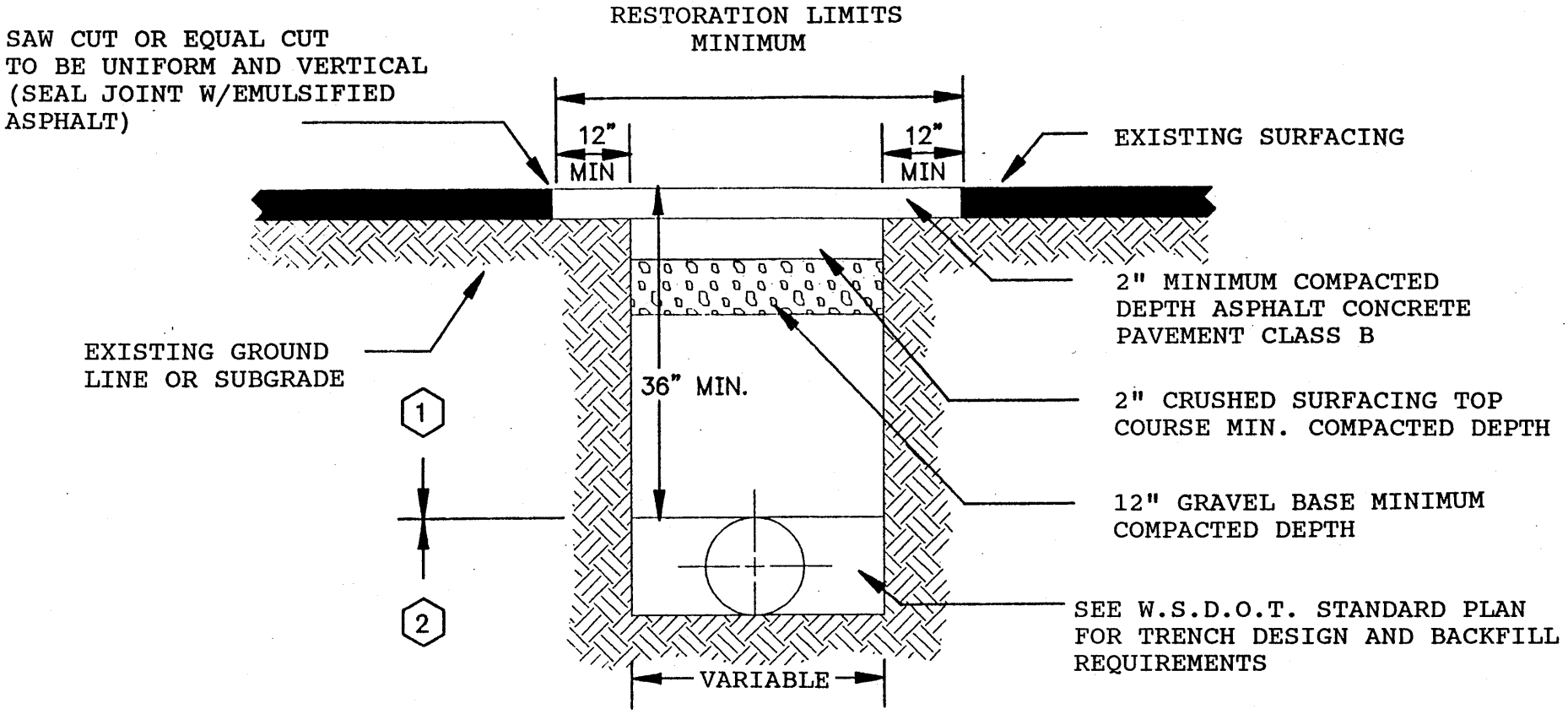

PATCH DETAIL

NO SCALE

NOTES:

1. ALL PATCHES ACROSS CITY ROADS, OR ROAD APPROACHES IN CITY RIGHT-OF-WAY SHALL CONFORM TO THIS DETAIL.

2. **TEMPORARY PATCH TO BE:**
   BACK FILLED AND COMPACTED TO EXISTING GROUND LINE AND PATCHED WITH TEMPORARY COLD MIX ASPHALT.

3. FOR LONGITUDINAL CUTS THE CITY MAY REQUIRE THE ENTIRE DRIVING LANE TO BE OVERLAID.

BACKFILL COMPACTION LEGEND

(1) BACKFILL MATERIAL PLACED IN 4" LIFTS AND COMPACTED TO 95% MAXIMUM DENSITY.

(2) BACKFILL MATERIAL PLACED IN 6" LIFTS AND COMPACTED TO 95% MAXIMUM DENSITY.

	ORIGINAL DRAWING		
	REVISIONS		

UTILITY PATCH DETAIL FOR ALL UTILITY ROAD CUTS FIGURE I