Copyright © BergerABAM. All Rights Reserved.

ZONE PLANTING SCHEDULE

Zone A	Scientific Name	Common Name	Type	Size of Plants (Material)	Plants per Group	Planting Density (Spacing)	Proportion of Planting in Strata (%)	Number of Plants
Wetland Buffer Enhancement	*Acer macrophyllum*	Bigleaf Maple	T	1 gallon container	1-3	12' centers	30	560
Scrub shrub/Forested	*Pseudotsuga menziesii*	Douglas Fir	T	1 gallon container	1-3	12' centers	20	373
area 268,720 square feet	*Thuja plicata*	Western Red Cedar	T	1 gallon container	1-3	12' centers	30	560
	Prunus emarginata	Bitter Cherry	T	1 gallon container	1-3	12' centers	20	373
								1866
	Acer circinatum	Vine Maple	S	1 gallon container	5-9	4' centers	30	4479
	Gaultheria shallon	Salal	S	1 gallon container	5-9	4' centers	15	2239
	Oemleria cerasiformis	Indian Plum	S	1 gallon container	5-9	4' centers	15	2239
	Sambucus racemosa	Red Elderberry	S	1 gallon container	5-9	4' centers	20	2986
	Symphoricarpos albus	Common Snowberry	S	1 gallon container	5-9	4' centers	20	2986
								14929
Zone B	**Scientific Name**	**Common Name**	**Type**	**Size of Plants (Material)**	**Plants per Group**	**Planting Density (Spacing)**	**Proportion of Planting in Strata (%)**	**Number of Plants**
Wetland Creation	*Salix lucida*	Pacific Willow	T	1 gallon container/live stake	1-3	12' centers	40	1139
Scrub shrub/Forested	*Populus balsamifera*	Black Cottonwood	T	1 gallon container	1-3	12' centers	30	854
area 409,961 square feet	*Thuja plicata*	Western Red Cedar	T	1 gallon container	1-3	12' centers	30	854
								2847
	Malus fusca	Western Crabapple	S	1 gallon container	5-9	4' centers	20	4555
	Lonicera involucrata	Black Twinberry	S	1 gallon container	5-9	4' centers	30	6833
	Cornus sericea	Red Twig Dogwood	S	1 gallon container	5-9	4' centers	25	5694
	Ribes lacusre	Black Gooseberry	S	1 gallon container	5-9	4' centers	25	5694
								22776
	Carex obnubta	Slough Sedge	HE	Bare root/plug	3	24" centers	30	23060
	Scirpus microcarpus	Small-fruited Bulrush	HE	Bare root/plug	3	24" centers	20	15374
	Eleocharis palustris	Common Spikerush	HE	Bare root/plug	3	24" centers	20	15374
	Juncus ensifolius	Daggerleaf Rush	HE	Bare root/plug	3	24" centers	30	23060
						Total Plant #		**76868**
Zone C	**Scientific Name**	**Common Name**	**Type**	**Size of Plants (Material)**	**Plants per Group**	**Planting Density (Spacing)**	**Proportion of Planting in Strata (%)**	**Number of Plants**
Wetland Enhancement	*Salix lucida*	Pacific Willow	T	1 gallon container/live stake	1-3	12' centers	40	362
Scrub shrub/Forested	*Fraxinus latifolia*	Oregon Ash	T	1 gallon container	1-3	12' centers	30	272
area 130,356 square feet	*Thuja plicata*	Western Red Cedar	T	1 gallon container	1-3	12' centers	30	272
								905
	Physocarpus capitatus	Pacific Ninebark	S	1 gallon container	5-9	4' centers	20	1408
	Lonicera involucrata	Black Twinberry	S	1 gallon container	5-9	4' centers	30	2133
	Cornus sericea	Red Twig Dogwood	S	1 gallon container/live stake	5-9	4' centers	25	1771
	Salix sitchensis	Sitka Willow	S	1 gallon container/live stake	5-9	4' centers	25	1771
								7082
	Carex obnubta	Slough Sedge	HE	Bare root/plug	3	24" centers	30	7381
	Scirpus microcarpus	Small-fruited Bulrush	HE	Bare root/plug	3	24" centers	20	4920
	Eleocharis palustris	Common Spikerush	HE	Bare root/plug	3	24" centers	20	4920
	Juncus ensifolius	Daggerleaf Rush	HE	Bare root/plug	3	24" centers	30	7381
								24602
Zone D	**Scientific Name**	**Common Name**	**Type**	**Size of Plants (Material)**	**Plants per Group**	**Planting Density (Spacing)**	**Proportion of Planting in Strata (%)**	**Number of Plants**
Streambank	*Cornus sericea*	Red Twig Dogwood	S	1 gallon container/live stake	5-9	4' centers	50	485
Scrub shrub/Forested	*Salix sitchensis*	Sitka Willow	S	1 gallon container/live stake	5-9	4' centers	50	485
area 16,800 square feet								**970**
	Carex obnubta	Slough Sedge	HE	Bare root/plug	3	24" centers	40	1292
	Scirpus microcarpus	Small-fruited Bulrush	HE	Bare root/plug	3	24" centers	20	646
	Eleocharis palustris	Common Spikerush	HE	Bare root/plug	3	24" centers	40	1163
								3101

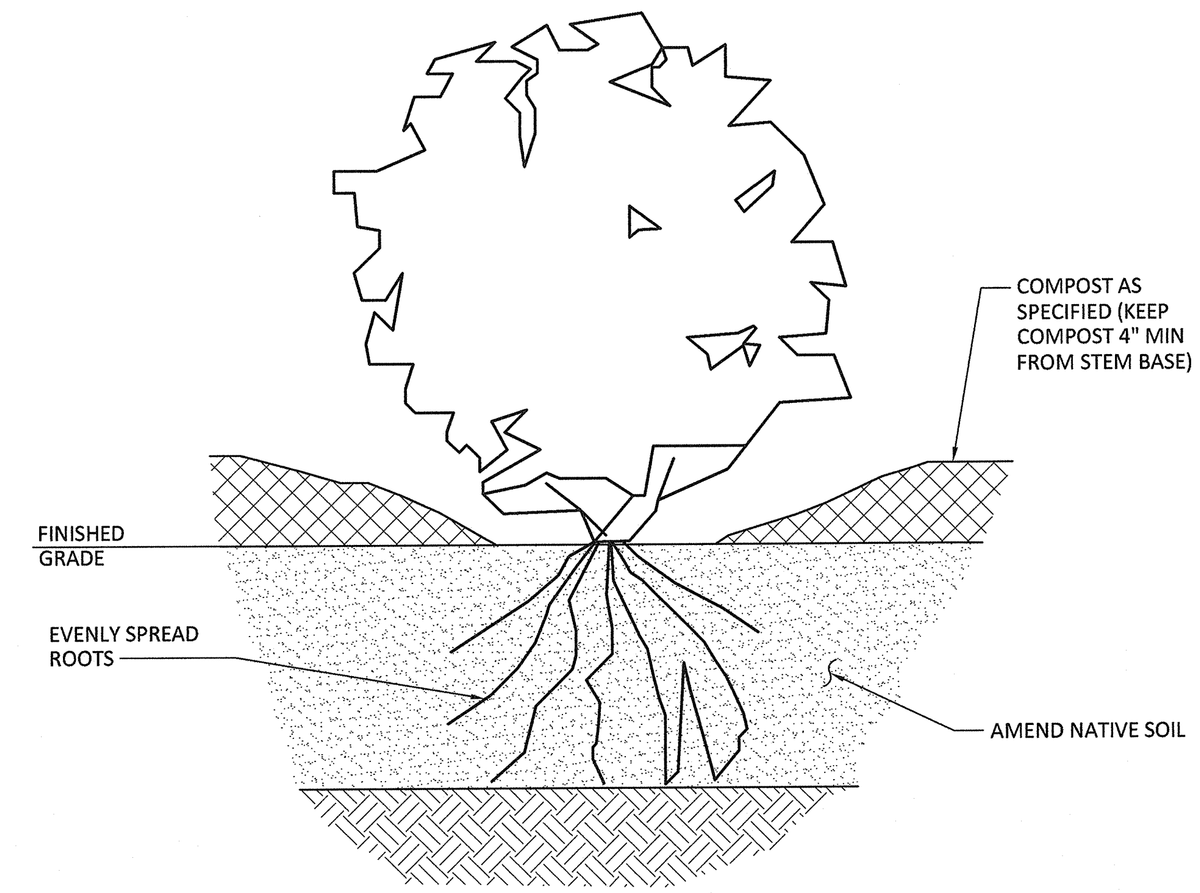

TREES & SHRUBS PLANTING DETAIL

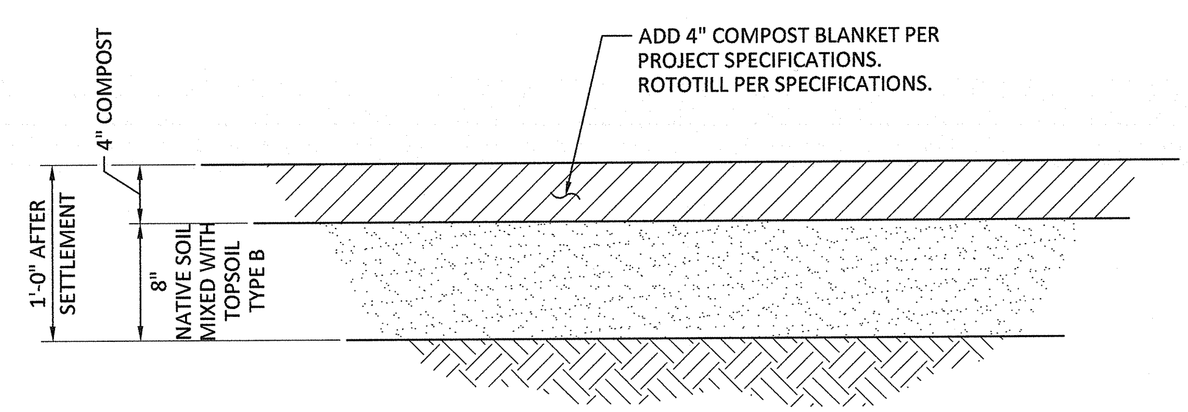

SOIL AMENDMENT DETAIL

NOTES:

T = TREE
S = SHRUB
HE = HERBACEOUS EMERGENT

MARK	REVISION DESCRIPTION	BY	APP.	DATE

BergerABAM
33301 9th Avenue South, Suite 300
Federal Way, Washington 98003-2600
(206) 431-2300 Fax: (206) 431-2250

6/25/2014
ROBERT L. FERNANDES, STATE OF WASHINGTON, 20306, STRUCTURAL ENGINEER, PROFESSIONAL ENGINEER

DRAWN BY TRL
DESIGN BY TRL
CHECK BY RAF
PROJ MGR JVJ

CITY OF FIFE
BROOKVILLE AND OXBOW WETLAND MITIGATION FOR PORT OF TACOMA ROAD INTERCHANGE PROJECT
STREAM AND WETLAND MITIGATION DETAILS
SHEET 3

DRAWING NO. C-14
PROJECT NO. A09.0139.01
DATE: 8/31/13
SHEET NO. 16 OF 16

Last Saved by: French on: Jun 24, 2014 3:58 PM File: Q:\Seattle\2009\SAP\WT-09-139\01\CADD\Dwgs\02_C14.dwg