Copyright © BergerABAM. All Rights Reserved.

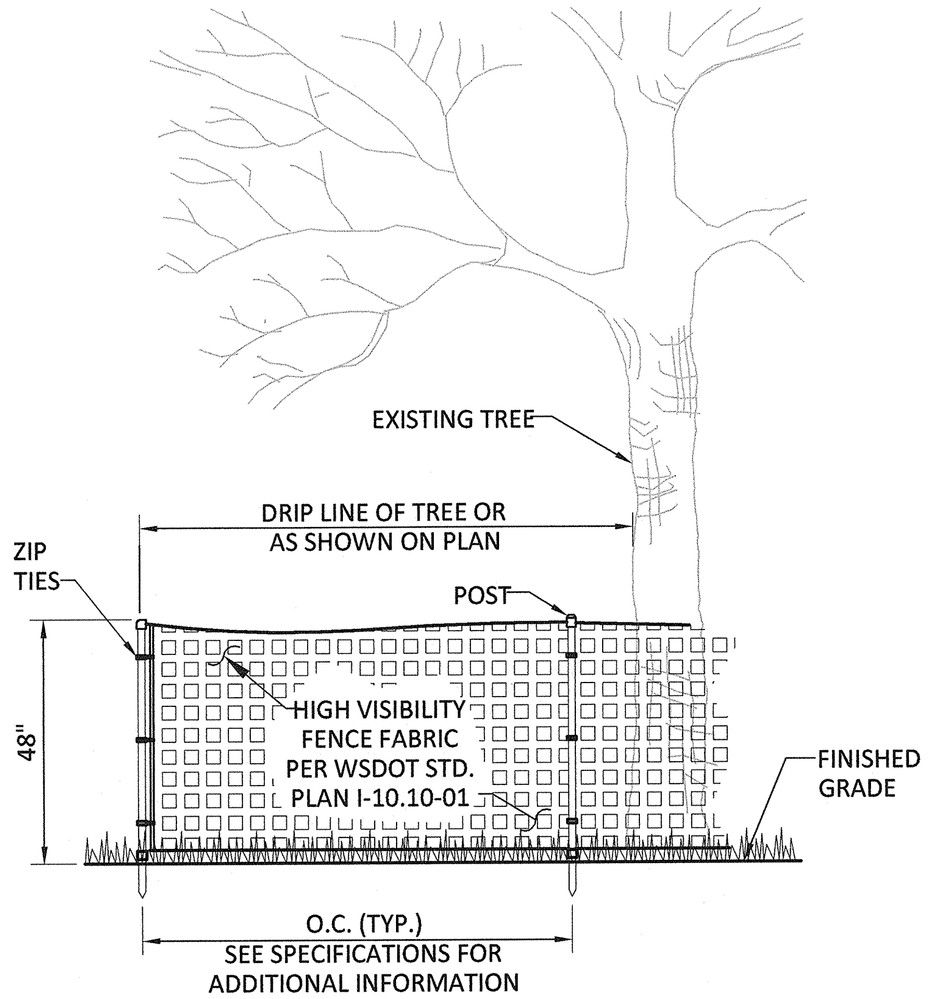


1 / - TREE PROTECTION FENCE DETAIL
SCALE: NTS

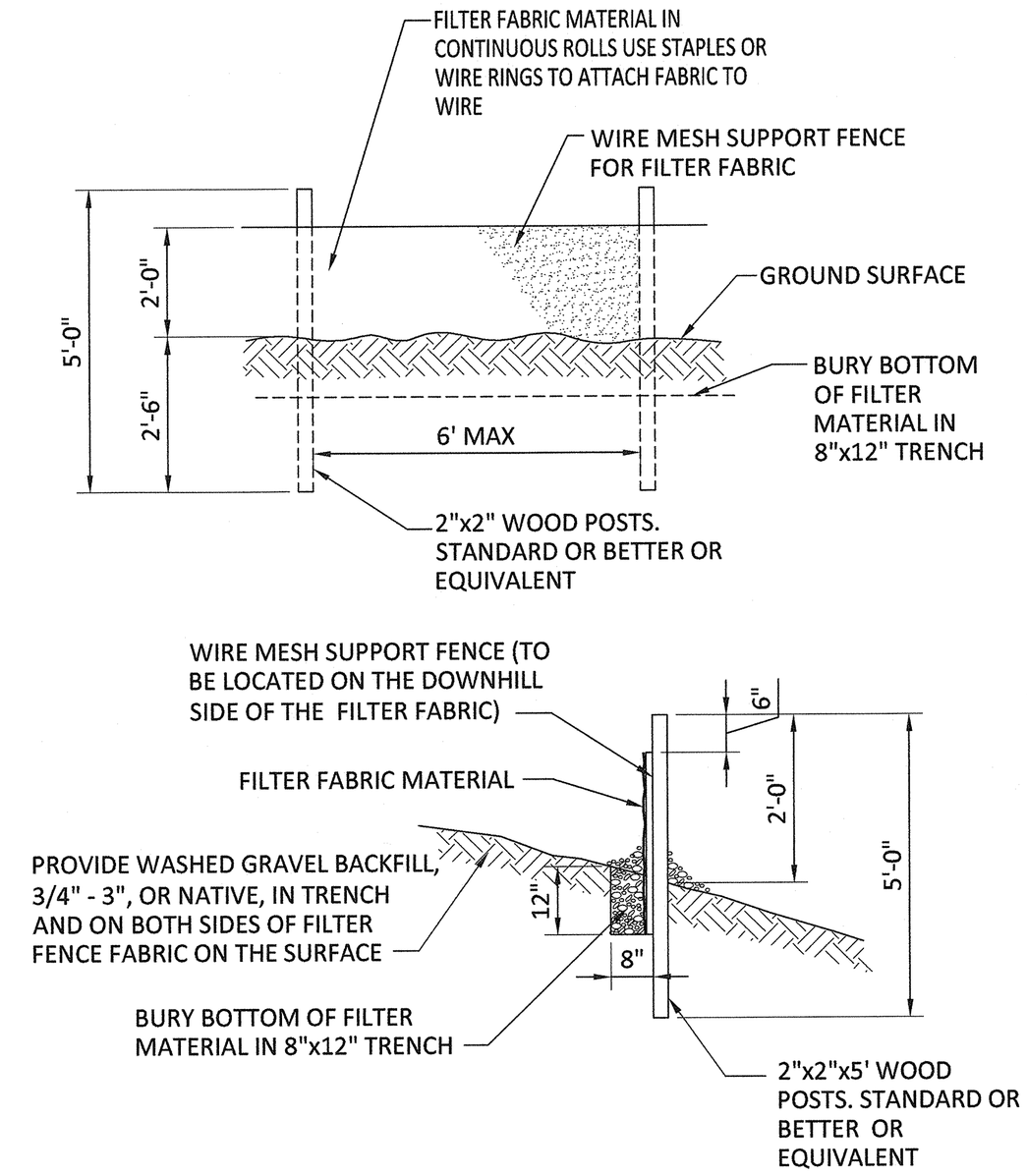


2 / - FILTER FABRIC FENCE DETAIL
SCALE: NTS

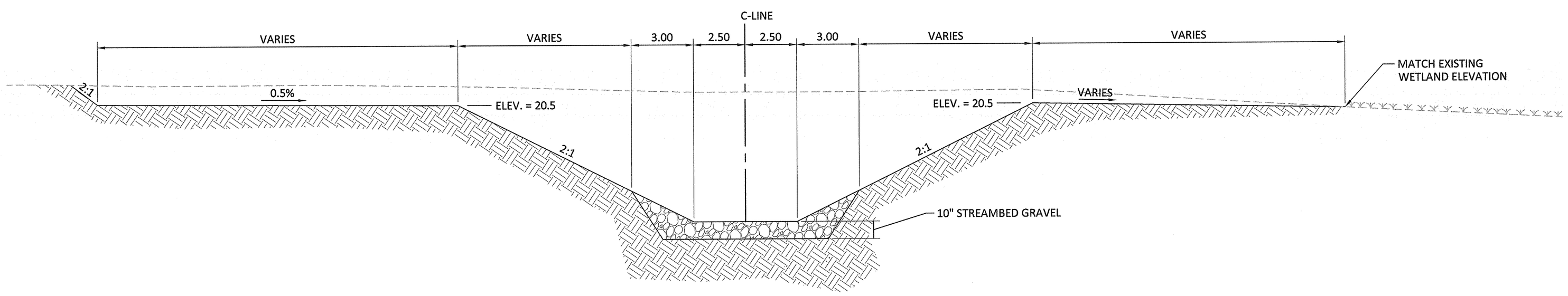


A / - TYPICAL STREAM SECTION
SCALE: NTS

| MARK | REVISION DESCRIPTION | BY | APP. | DATE |
|---|---|---|---|---|
| | | | | |

BergerABAM
33301 9th Avenue South, Suite 300
Federal Way, Washington 98003-2600
(206) 431-2300 Fax: (206) 431-2250

6/25/2014
ROBERT L. FERNANDES
STATE OF WASHINGTON
20306
STRUCTURAL ENGINEER
PROFESSIONAL ENGINEER

DRAWN BY DAW
DESIGN BY DAW
CHECK BY RAF
PROJ MGR RAF

CITY OF FIFE
**BROOKVILLE AND OXBOW WETLAND MITIGATION FOR PORT OF TACOMA ROAD INTERCHANGE PROJECT**
STREAM AND WETLAND MITIGATION DETAILS
SHEET 1

DRAWING NO. C-12
PROJECT NO. A09.0139.01
DATE: 8/31/13
SHEET NO. 14 OF 16

Last Saved by: French on: Jun 24, 2014 3:57 PM File: Q:\Seattle\2009\SAP\WT-09-139\01\CADD\Dwgs\02_C12.dwg