VOLUME 2, CONTRACT DRAWINGS
CITY OF FIFE
PS-10 REHABILITATION / PS-5 AND PS-6 WETWELL COATING

GENERAL

SHEET	DESCRIPTION
G-001	TITLE SHEET, LOCATION MAP, AND DRAWING INDEX
G-002	ABBREVIATIONS, SYMBOLS, AND GENERAL DETAILS
C-001	MISCELLANEOUS CIVIL DETAILS
S-001	STRUCTURAL GENERAL NOTES

PS-10 REHABILITATION

SHEET	DESCRIPTION
C-101	EXISTING SITE PLAN
C-101A	SITE DEMOLITION PLAN
C-102	BYPASS PUMPING DETAILS
C-103	SITE PLAN
C-104	SITE PLAN SECTIONS
C-105	WATER SYSTEM IMPROVEMENTS (WEST)
C-106	WATER SYSTEM IMPROVEMENTS (EAST)
S-101	STRUCTURAL PLAN AND SECTIONS
S-102	STRUCTURAL SECTIONS AND DETAILS
S-103	WEATHER COVER DETAILS
M-101	MECHANICAL PLAN AND DETAILS
M-102	MECHANICAL SECTIONS AND DETAILS
E-101	ELECTRICAL SYMBOLS, ABBREVIATIONS, AND LEGENDS
E-102	ONE-LINE DIAGRAM, LOAD CALCULATION, AND TABLES
E-103	ELECTRICAL SITE PLAN
E-103A	TACOMA POWER REVISION PLAN
E-103B	TACOMA POWER REVISION PARTIAL PLAN
E-104	PS-10 ELECTRICAL DEMOLITION PLAN
E-105	STANDARD ELECTRICAL DETAILS

PS-5 WETWELL COATING

SHEET	DESCRIPTION
C-501	SEWAGE BYPASS SITE PLAN
C-502	COATING NOTES AND AREA CALCULATIONS
C-503	COATING NOTES AND DETAILS 1
C-504	COATING NOTES AND DETAILS 2
C-505	AERATION MIXER INSTALLATION
C-506	AERATION MIXER DETAILS
C-507	BYPASS PUMPING DETAILS
E-501	AERATION BLOWER ELECTRICAL

PS-6 WETWELL COATING

SHEET	DESCRIPTION
C-601	SEWAGE BYPASS SITE PLAN
C-602	COATING NOTES AND AREA CALCULATIONS
C-603	COATING NOTES AND DETAILS 1
C-604	COATING NOTES AND DETAILS 2
C-605	AERATION MIXER INSTALLATION
C-606	AERATION MIXING DETAILS
C-607	BYPASS PUMPING DETAILS
E-601	FLOW METER REPLACEMENT AND AERATION BLOWER ELECTRICAL

REV	DATE	DES	CHECK	APPROVALS	REVISION DESCRIPTION

DATE: 07-07-14
DESIGNED:
DRAWN:
CHECKED:
APPROVED:
CIVIL REVIEW:
ARCH REVIEW:
STRUC REVIEW:
MECH REVIEW:

TETRA TECH
www.tetratech.com
1420 Fifth Avenue, Suite 600
Seattle, Washington 98101
Phone: 206-883-9300 Fax: 206-883-9301

BRUCE R. GRAVELLE, STATE OF WASHINGTON, 23364, REGISTERED PROFESSIONAL ENGINEER, 07-7-14

CITY OF FIFE
PS-10 REHABILITATION / PS-5 AND PS-6 WETWELL COATING

TITLE SHEET, LOCATION MAP AND DRAWING INDEX

FILE NO:
PROJECT NO: 135-12584-14002
DWG NO: G-001
SHEET: OF

This drawing is full size when 22"x 34" or is reduced to half size when 11"x17"

COPYRIGHT 2010, TETRA TECH, ALL RIGHTS RESERVED

Path: \\WRS318FS1\Projects\12584\135-12584-14001\CAD\SheetFiles\G-001 TITLE SHEET LOCATION MAP AND DRAWING INDEX.dwg Plot date: Jul 07, 2014-04:07:00pm CAD User: bryan.thomas;
Xref Filename: I G-BS-22x34hz I GS-BRG-WA I _BRG-SIG I

ABBREVIATIONS

ABBV	DESCRIPTION
&	AND
#	NUMBER, POUND
@	AT
%	PERCENT
AC	AIR CONDITIONER
AD	AIR DRYER, ACCESS DOOR
AFF	ABOVE FINISH FLOOR
AHU	AIR HANDLING UNIT
AL	ALUMINUM
ALT	ALTERNATE
APPROX	APPROXIMATELY
AR	AIR RECEIVER
ASHRAE	AMERICAN SOCIETY OF HEATING, REFRIGERATING AND AIR CONDITIONING ENGINEERS, INC
ASME	AMERICAN SOCIETY OF MECHANICAL ENGINEERS
BDD	BACKDRAFT DAMPER
BFF	BELOW FINISHED FLOOR
BOD	BOTTOM OF DUCT
BOT	BOTTOM
BTUH	BRITISH THERMAL UNITS PER HOUR
BV	BALANCING VALVE, BALL VALVE
C	CHANNEL
°C	DEGREES CENTIGRADE
C1	DOMESTIC POTABLE WATER
C2	NONPOTABLE WATER
CA	COMPRESSED AIR
CB	CATCH BASIN
CDF	CONTROLLED DENSITY FILL
CFH	CUBIC FEET PER HOUR
CFM	CUBIC FEET PER MINUTE
CI	CAST IRON
CIPP	CAST IN PLACE PIPE
CL	CLASS, CENTERLINE
CLG	CEILING
CO	CLEANOUT
CONC	CONCRETE
CONT	CONTINUOUS
CR	CRANE
CV	CONTROL VALVE
CW	COLD WATER (DOMESTIC)
CY	CUBIC YARD
DR	DRAIN
DEMO	DEMOLITION
DF	DIESEL FUEL
DG	DOOR GRILLE
DI	DUCTILE IRON
DIA	DIAMETER
DN	DOWN
DWG	DRAWING
DWV	DRAIN, WASTE, AND VENT
E	EAST
EA	EACH, EXHAUST AIR
EAD	EXHAUST AIR DAMPER
EE	ENGINE EXHAUST
EF	EXHAUST FAN, EACH FACE
EFF	EFFICIENCY
EG	EXHAUST GRILLE
EL	ELEVATION
EMER	EMERGENCY
EQUIP	EQUIPMENT
ET	EXPANSION TANK
EWB	ENTERING WET BULB TEMP
EXH	EXHAUST
EXST	EXISTING
EW	EACH WAY
°F	DEGREES FAHRENHEIT
F	FILTER
FA	FOUL AIR
FCA	FLANGED COUPLING ADAPTER
FCO	FLOOR CLEANOUT
FD	FLOOR DRAIN
FF	FINISH FLOOR
FL	FLANGE
FO	FUEL OIL
FOB	FLAT ON BOTTOM
FOR	FUEL OIL RETURN
FOS	FUEL OIL SUPPLY
FOT	FLAT ON TOP
FOV	FUEL OIL VENT
FLR	FLOOR
FM	FORCE MAIN
FRP	FIBERGLASS REINFORCED PLASTIC
', FT	FOOT, FEET
GAL	GALLON
GALV	GALVANIZED
G	GAS
GPM	GALLONS PER MINUTE

ABBV	DESCRIPTION
HB	HOSE BIBB
HC	HANDICAP, HEATING COIL
HDPE	HIGH DENSITY POLYETHYLENE
HORIZ	HORIZONTAL
HP	HORSEPOWER OR HIGH PRESSURE CA (165 PSIG)
HR	HOUR
HT	HEIGHT
HVAC	HEATING, VENTILATION AND AIR CONDITIONING
HW	HOT WATER (DOMESTIC)
HWC	HOT WATER CIRCULATION
HWT	HOT WATER TANK
HZ	HERTZ
ID	INSIDE DIAMETER
IE	INVERT ELEVATION
", IN	INCHES
IW	INDUSTRIAL WASTE
IWH	INSTANTANEOUS WATER HEATER
KW	KILOWATT
L	LAVATORY
LBS	POUNDS
LCW	LABORATORY COLD WATER
LG	LABORATORY GAS
LHW	LABORATORY HOT WATER
LPG	LIQUEFIED PETROLEUM GAS
LT	LEFT
LVR	LOUVER
MAX	MAXIMUM
MECH	MECHANICAL
MFR	MANUFACTURER
MH	MANHOLE
MIN	MINIMUM
MJ	MECHANICAL JOINT
MTD	MOUNTED
N	NORTH
NC	NORMALLY CLOSED
NE	NORTHEAST
NIC	NOT IN CONTRACT
NO	NORMALLY OPEN
NO.	NUMBER
NOM	NOMINAL
NPW	NON POTABLE WATER
NTS	NOT TO SCALE
NW	NORTHWEST
OA	OUTSIDE AIR
OAD	OUTSIDE AIR DAMPER
OC	ON CENTER
OCU	ODOR CONTROL UNIT
OD	OUTSIDE DIAMETER
OPNG	OPENING
ORD	OVERFLOW ROOF DRAIN
OXY	OXYGEN
OPP	OPPOSITE
P	PUMP
PD	PRESSURE DRAIN
PE	PLAIN END
PF	PLUMBING FIXTURE
PH	PHASE
PL	PLATE
PLS	PLACES
POC	POINT OF CONNECTION
PRV	PRESSURE REDUCING VALVE
PSF	POUNDS PER SQUARE FOOT
PSI	POUNDS PER SQUARE INCH
PSIG	POUNDS PER SQUARE INCH GAUGE
PT	POINT
PVC	POLYVINYL CHLORIDE
R	RADIUS OR RETURN
RA	RETURN AIR
RAD	RETURN AIR DAMPER
RD	ROOF DRAIN, RELIEF DAMPER
RDO	ROOF DRAIN OVERFLOW
RED	REDUCER
RG	RETURN GRILLE
RPBA	REDUCED PRESSURE BACKFLOW ASSEMBLY
RPBFP	REDUCED PRESSURE BACKFLOW PREVENTER
RPM	REVOLUTIONS PER MINUTE
RR	RETURN REGISTER
RS	RAW SEWAGE
RT	RIGHT

ABBV	DESCRIPTION
S	SINK, SOUTH
SA	SUPPLY AIR
SAD	SUPPLY AIR DAMPER
SD	SUPPLY DIFFUSER
SEC	SECTION
SF	SUPPLY FAN OR SQUARE FEET
SG	SUPPLY GRILLE OR SLUICE GATE
SHT	SHEET
SIM	SIMILAR
SL	STATIONARY LOUVER
SM	SHEET METAL
SMACNA	SHEET METAL AND AIR CONDITIONING CONTRACTORS NATIONAL ASSOCIATION, INC
SP	STATIC PRESSURE
SPEC	SPECIFICATION
SR	SUPPLY REGISTER
SS	SANITARY SEWER
SQ	SQUARE
SST	STAINLESS STEEL
STA	STATION
STL	STEEL
SW	SERVICE WATER, SOUTHWEST, STORM WATER
SYM	SYMMETRICAL
T	TANK
T&B	TOP AND BOTTOM
TELE	TELEPHONE
TG	TRANSFER GRILLE
TSP	TOTAL STATIC PRESSURE
TOC	TOP OF CONCRETE
TV	TANK VENT
TYP	TYPICAL
UH	UNIT HEATER
UC	UNDERCUT (DOOR)
V	VENT
VD	VOLUME DAMPER
VERT	VERTICAL
VLT	VAULT
VTR	VENT THROUGH ROOF
W	WEST, WATER, WASTE
W/	WITH
W/O	WITHOUT
WC	WATER COLUMN OR WATER CLOSET
WCO	WALL CLEAN OUT
WG	WATER GAGE
WP	WORK POINT
WPD	WATER PRESSURE DROP
YCO	YARD CLEANOUT

PIPING SYMBOLS

SINGLE LINE PIPING

- OR — PIPE IN SECTION
- 45° OR 90° OFF BOTTOM
- 45° OR 90° OFF TOP
- PITCH OF PIPE OR TRENCH DRAIN , DOWN IN DIRECTION OF ARROW
- DIRECTION OF FLOW
- REDUCER
- PIPE END
- UNION
- 45° TEE
- WCO — WALL CLEANOUT
- CO — FLOOR OR YARD CLEANOUT
- STRAINER
- QUICK DISCONNECT
- OR — FLOOR DRAIN
- OR — FLOOR DRAIN W/CLEAN OUT
- ANCHOR
- EXPANSION JOINT OR FLEXIBLE CONNECTION
- TRAP
- TRAP AND ARM ASSEMBLY
- BURIED OR UNDER SLAB PIPING

SINGLE LINE VALVES

- PLUG VALVE
- BALL VALVE
- BUTTERFLY VALVE
- GATE VALVE
- DIAPHRAGM OR PNEUMATIC VALVE
- GLOBE VALVE
- CHECK VALVE, HINGE PIN INDICATES FLOW DIRECTION
- PRESSURE REDUCING VALVE
- PRESSURE REGULATING VALVE
- PRESSURE REGULATOR
- M — ELECTRIC MOTOR OPERATED VALVE
- S — SOLENOID VALVE
- RELIEF VALVE, PRESSURE OR VACUUM
- UTILITY STATION / HOSE BIBB

MISCELLANEOUS

- PRESSURE GAGE (W/ ISOLATION VALVE)
- HOSE RACK
- THERMOMETER
- VENT THRU ROOF
- PUMP OR BLOWER
- COMPRESSED AIR STATION W/ HOSE RACK
- COMPRESSED AIR STATION W/O HOSE RACK
- WATER HAMMER ARRESTOR

FLANGED DUCTILE IRON FITTINGS

- 90° ELBOW
- 90° ELBOW DOWN
- 45° ELBOW
- 90° ELBOW UP
- TEE
- CROSS
- 45° TEE
- FLEX COUPLING

MECHANICAL JOINT FITTINGS

- 90° ELBOW
- 90° ELBOW DOWN
- 45° ELBOW
- 90° ELBOW UP
- TEE
- 45° TEE

NOTES

1. ADDITIONAL ABBREVIATIONS AND SYMBOLS TO THOSE INDICATED HEREON MAY APPEAR ON THE MECHANICAL DRAWINGS. REFER TO GENERAL DRAWINGS FOR IDENTIFICATION AND CLARIFICATION.
2. NOT ALL ABBREVIATIONS AND SYMBOLS INDICATED HEREON WILL APPEAR ON THE MECHANICAL DRAWINGS.

SHEET REFERENCING

THE SHEETS ARE REFERENCED IN THE FOLLOWING MANNER

SECTION CUT ON SHEET C-100

SECTION NUMBER — 1 — C-101 — SHEET ON WHICH SECTION IS SHOWN

ON SHEET C-101 THIS SECTION IS DEFINED AS:

SECTION NUMBER — 1 — C-100 — SHEET FROM WHICH SECTION WAS CUT

SECTION

SCALE: 1/4"=1'-0"

DETAIL NUMBER — 3 — SAME SHEET (OPTIONAL)

DETAILED PORTION

DETAIL NUMBER — 3 — SAME SHEET

FLAG POINTS TO ELEVATION OR DETAILED AREA PERPENDICULAR TO VIEWER — 3 — C-101

NOTES:

1. PLANS, DETAILS AND ELEVATIONS ARE CROSS REFERENCED IN A SIMILAR MANNER.
2. SECTION REFERENCED IN TEXT, "SEE 5/C-104" MEANS SEE SECTION 5 OR DETAIL 5 ON SHEET C-104.

8" RS — PIPE SIZE AND SERVICE DESIGNATIONS

SUG-020202 — EQUIPMENT NUMBER DESIGNATIONS

REV	DATE	DES	CHECK	APPROVALS	REVISION DESCRIPTION

DATE: 07-07-14	CIVIL REVIEW:
DESIGNED:	ARCH REVIEW:
DRAWN:	STRUC REVIEW:
CHECKED:	MECH REVIEW:
APPROVED:	

This drawing is full size when 22"x 34" or is reduced to half size when 11"x17"

TETRA TECH
www.tetratech.com
1420 Fifth Avenue, Suite 600
Seattle, Washington 98101
Phone: 206-883-9300 Fax: 206-883-9301

BRUCE R. GRAVELLE — STATE OF WASHINGTON — 23364 — REGISTERED PROFESSIONAL ENGINEER — 7-7-14

CITY OF FIFE

PS-10 REHABILITATION / PS-5 AND PS-6 WETWELL COATING

ABBREVIATIONS, SYMBOLS AND GENERAL NOTES

FILE NO:	
PROJECT NO:	135-12584-14002
DWG NO:	G-002
SHEET:	OF

COPYRIGHT 2010, TETRA TECH, ALL RIGHTS RESERVED

Path: \\WRS38FS1\Projects\12584\135-12584-14001\CAD\SheetFiles\G-002 ABBREVIATIONS SYMBOLS AND GENERAL NOTES.dwg Plot date: Jul 07, 2014-04:07:17pm CAD User: bryan.thomsy
Xref Filename: 1 G-BS-22x34hz 1 GS-BRG-WA 1 _BRG-STG 1

PIPE SCHEDULE, PS-10 REHABILITATION / PS-5 AND PS-6 WETWELL COATING

SERVICE	DIA (IN)	BURIED/ EXPOSED	JOINTS	PIPE MATERIAL	COMMENTS
	1-1/2	EXPOSED	SOLVENT WELD	SCH 80 PVC , ASTM D 1785	DRAIN FOR VAULT HATCH AT PS-10
AIR	2-3	BOTH	SOLVENT WELD	SCH 80 PVC, ASTM D 1785	AIR LINES FOR WETWELL AERATION / MIXING SYSTEM AT PS-5 AND PS-6
DRAIN	1-1/2	EXPOSED	SOLVENT WELD	SCH 80 PVC , ASTM D 1785	DRAIN FOR VAULT HATCH AT PS-10
	2	BURIED	SOLVENT WELD	SCH 80 PVC , ASTM D 1785	DRAIN FOR PS-10 HANDHOLE
	4	BURIED	MECH JOINT	DI, CLASS 52, PROTECTO 401 LINED	PS-10 VAULT DRAIN LINE
	4	EXPOSED	FLANGED	DI, CLASS 52, PROTECTO 401 LINED	PS-10 VAULT DRAIN LINE IN WETWELL
	4	EXPOSED	SOLVENT WELD	SCH 80 PVC, ASTM D 1785	DRAIN LINE EXTENSIONS IN PS-5 AND PS-6 WETWELLS
PS-10 PUMP DISCHARGE	4-6	BURIED	MECH JOINT (RESTRAINED)	DI, STANDARD SPEC 9-30.2(1), CLASS 52, CEMENT LINED	PIPE JOINTS TO HAVE BOLTED RESTRAINT SYSTEM PER SECTION 15085
	4	EXPOSED	FLANGED	SAME AS BURIED EXCEPT FLANGED JOINTS	DISCHARGE LINES IN THE WETWELL AND VALVE VAULT
TEMPORARY BYPASS PIPE (EXCLUDES ABOVE-GRADE BY-PASS PIPE)	12	EXPOSED	FLANGED	SCH 40 PVC, ASTM D 1785	BYPASS PIPE IN THE BYPASS MANHOLES AT PS-5 AND PS-6
	12	BURIED	MECH JOINT (RESTRAINED)	DI, STANDARD SPEC 9-30.2(1), CLASS 50, CEMENT LINED	BURIED PIPING IN OR NEAR PUBLIC ROW AT PS-5 & PS-6. PIPE JOINTS TO HAVE BOLTED RESTRAINT SYSTEM PER SECTION 15085.
	6	BURIED	MECH JOINT	DI, STANDARD SPEC 9-30.2(1), CLASS 50, CEMENT LINED	FLOAT CABLE ACCESS PIPE TO BYPASS MANHOLE
	4	EXPOSED	SOLVENT WELD, FLANGED, THERMAL WELD	SCH 40 PVC, HDPE, OTHER	TEMPORARY BYPASS PIPE MANIFOLD IN PS-10 MANHOLE
VENT	2	BOTH	SOLVENT WELD	SCH 80 PVC, ASTM D 1785	VENT LINE FOR THE ARV IN PS-10 VAULT
	3	BURIED	SOLVENT WELD	SCH 80 PVC, ASTM D 1785	WETWELL VENT LINE
WATER	12	BURIED	MECH JOINT	DI, STANDARD SPEC 9-30.2(1), CLASS 52, CEMENT LINED	SEE WATER SYSTEM IMPROVEMENT DWGS
	2	BURIED	THERMAL FUSION	HDPE, SIDR-7	PER CITY STND PLAN W-3
	2	BURIED	THREADED	BRASS OR COPPER	PER CITY STND PLAN W-3 AND W-17 AND W-18
IRRIGATION	ALL	BURIED	SOLVENT WELD	MATCH EXISTING	REPLACE EXISTING SPRINKLER PIPING (SEE DWG C-103)

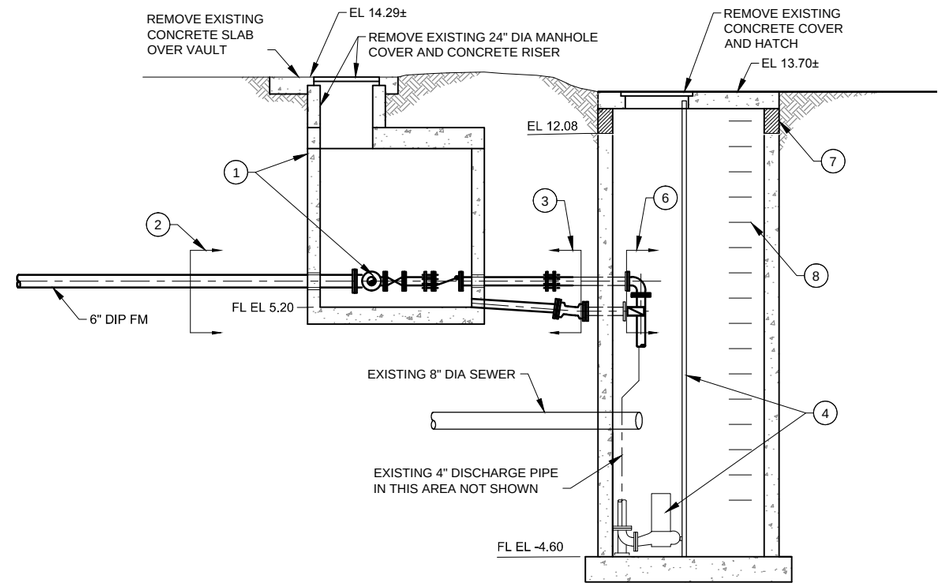

A C-101A SECTION
SCALE: 1"=3'-0"

CONSTRUCTION NOTES

1. REMOVE EXISTING 4' x 6' x 6' HT VAULT AND ALL PIPING AND VALVING.
2. REMOVE PORTION OF EXISTING 6" DIA FORCE MAIN AS REQUIRED TO CONSTRUCT NEW VALVE VAULT. SEE SHEET C-103.
3. REMOVE EXISTING 4" DIP DISCHARGE AND DRAIN PIPING FROM APPROXIMATELY 1'-0" FROM THE MANHOLE WALL TO THE EXISTING VAULT.
4. REMOVE EXISTING 1 1/2 HP SUBMERSIBLE PUMP, DISCHARGE ELBOW, AND GUIDE RAILS, TYP OF TWO.
5. NOT USED
6. REMOVE EXISTING 4" DIP DISCHARGE LINES AND THE 4" CHECK VALVE ON THE VAULT DRAIN LINE FROM THE FLANGE ON THE WALL PIPES TO THE END OF THE PIPE WITHIN THE WETWELL.
7. REMOVE PORTION OF MANHOLE WALL NECESSARY TO CONSTRUCT NEW COVER SLAB. SEE STRUCTURAL FOR DETAILS.
8. CUT-OFF EXISTING EMBEDDED LADDER RUNGS AND GRIND METAL DOWN 1/8" BELOW CONCRETE SURFACE.

GENERAL CIVIL NOTES:

1. PROVIDE ONE FOOT OF CRUSHED SURFACING BASE COURSE FOUNDATION MATERIAL BELOW ALL STRUCTURAL SLABS ON GRADE AND FOUNDATIONS, UNLESS NOTED OTHERWISE. THE FOUNDATION MATERIAL IS TO EXTEND A MINIMUM OF ONE FOOT BEYOND THE EDGE OF THE STRUCTURE.
2. ALL EXCAVATION BACKFILL FOR THIS PROJECT IS TO BE CRUSHED SURFACING BASE COURSE (CSBC).
3. THE FOLLOWING WSDOT STANDARD PLANS APPLY TO THE WORK INCLUDED IN THIS PROJECT AND ARE SHOWN IN APPENDIX H:
   a. CEMENT CONCRETE TRAFFIC CURB AND GUTTER STANDARD PLAN F-10.12-02
   b. CEMENT CONCRETE TRAFFIC CURB STANDARD PLAN F-10.12-02.
   c. CEMENT CONCRETE SIDEWALK STANDARD PLAN F-30.10-02
   d. DETECTABLE WARNING SURFACE STANDARD PLAN F-45.10-01
   e. CEMENT CONCRETE DRIVEWAY ENTRANCE TYPES 1, 2, 3, & 4 STANDARD PLAN F-80.10-02
   f. BOLLARD TYPE 2, STANDARD PLAN H-60.20-01

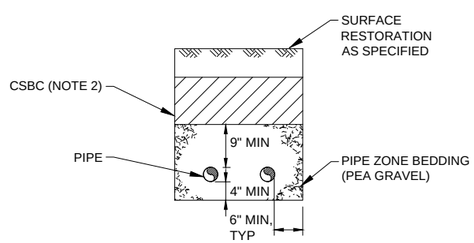

1 C-103 PIPE TRENCH
SCALE: NTS
C-104
C-506
C-606

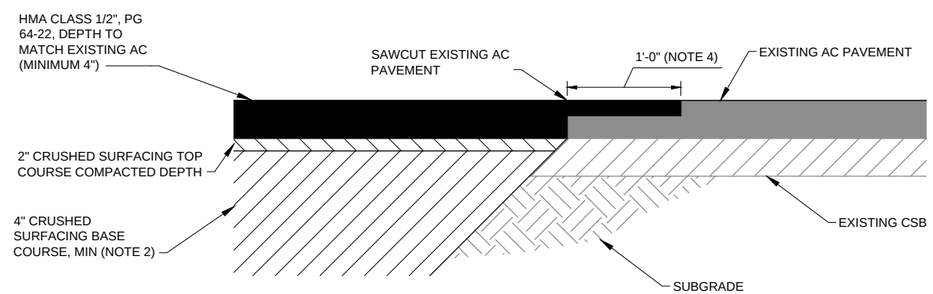

2 C-103 PAVEMENT PATCH
SCALE: NTS
C-104
C-505
C-506
C-507
C-607

PATCH NOTES

1. THE PATCH IS TO BE INSTALLED AS SOON AS PRACTICAL TO LIMIT INTERFERENCE WITH TRAFFIC AS WELL AS ALLOW TRAFFIC TO HELP COMPACT THE PATCH. THE PATCH IS TO BE INSTALLED AFTER THE BURIED FACILITIES IN THE PATCHED AREA HAVE BEEN COMPLETED, AND INSTALLING THE PATCH WOULD NOT INTERFERE WITH CURRENT OR FUTURE CONSTRUCTION ACTIVITIES.
2. SEE GENERAL CIVIL NOTE 2 REGARDING THE USE OF CSBC AS BACKFILL ON THIS PROJECT.
3. THE CSBC AND CSTC ARE TO BE COMPACTED PER SECTION 4-04.3 (5), AND THE HMA IS TO BE COMPACTED PER SECTION 5-04.3 (10), OF THE STANDARD SPECIFICATIONS.
4. THE PATCHED AREA IS TO THEN BE PLANED TO A DEPTH OF 2-INCHES LOWER THAN THE EXISTING PAVEMENT, INCLUDING A MINIMUM OF ONE FT OF EXISTING PAVEMENT ADJACENT TO THE PATCH, UNLESS NOTED OTHERWISE.
5. THE PLANED AREA IS THEN TO HAVE A 2-INCH OVERLAY OF COMPACTED HMA.

REV	DATE	DES	CHECK	APPROVALS	REVISION DESCRIPTION

DATE: 07-07-14 | CIVIL REVIEW:
DESIGNED: | ARCH REVIEW:
DRAWN: | STRUC REVIEW:
CHECKED: | MECH REVIEW:
APPROVED:

This drawing is full size when 22"x 34" or is reduced to half size when 11"x17"

TETRA TECH
www.tetratech.com
1420 Fifth Avenue, Suite 600
Seattle, Washington 98101
Phone: 206-883-9300 Fax: 206-883-9301

BRUCE R. GRAVELLE, STATE OF WASHINGTON, 23364, REGISTERED PROFESSIONAL ENGINEER, 7-7-14

CITY OF FIFE
PS-10 REHABILITATION / PS-5 AND PS-6 WETWELL COATING

MISCELLANEOUS CIVIL DETAILS

FILE NO:
PROJECT NO: 135-12584-14002
DWG NO: C-001
SHEET: OF

COPYRIGHT 2010, TETRA TECH, ALL RIGHTS RESERVED

Path: \\WRS318FS1\Projects\12584\135-12584-14001\CAD\Sheetfiles\C-001 MISCELLANEOUS CIVIL DETAILS.dwg Plot date: Jul 08, 2014-09:46:05am CAD User: janlecarter.
Xref Filename: I G-BS-22x34hz I D-SC-VAULT-EX I GS-BRG-WA I _BRG-STG I

G. STRUCTURAL - GENERAL

G1 SCOPE
THE NOTES AND DETAILS ON THIS SHEET ARE GENERAL AND APPLY TO THE ENTIRE PROJECT EXCEPT WHERE THERE ARE SPECIFIC INDICATIONS TO THE CONTRARY.

G2 APPLICABLE SPECIFICATIONS AND CODES
CONSTRUCTION SHALL BE IN ACCORDANCE WITH THE 2012 EDITION OF THE INTERNATIONAL BUILDING CODE. THE ABOVE SHALL GOVERN EXCEPT WHERE OTHER APPLICABLE CODES OR THE CONTRACT DOCUMENTS ARE MORE RESTRICTIVE.

G3 ALTERNATIVE DESIGNS
THE STRUCTURAL SYSTEMS AND DETAILS ON THESE PLANS ARE THE PRIORITY DESIGN; HOWEVER, ALTERNATIVE SYSTEMS AND DETAILS MAY BE USED IF THE CONTRACTOR SUBMITS PLANS WITH SUBSTANTIATING CALCULATIONS AND TEST DATA WHICH BEAR A WASHINGTON STATE LICENSED ENGINEER'S SEAL AND SIGNATURE FOR APPROVAL OF THE REGISTERED DESIGN PROFESSIONAL IN RESPONSIBLE CHARGE.

G4 DIMENSIONS
STRUCTURAL DIMENSIONS CONTROLLED BY OR RELATED TO MECHANICAL AND ELECTRICAL EQUIPMENT SHALL BE VERIFIED BY THE CONTRACTOR PRIOR TO CONSTRUCTION. WRITTEN DIMENSIONS SHALL TAKE PRECEDENCE OVER SCALES SHOWN ON THE DRAWINGS.

G5 PROVISIONS FOR EQUIPMENT
MECHANICAL AND ELECTRICAL EQUIPMENT SUPPORTS, ANCHORAGES, OPENINGS, PIPE SLEEVES, RECESSES AND REVEALS NOT SHOWN ON THE STRUCTURAL DRAWINGS, BUT REQUIRED BY OTHER CONTRACT DRAWINGS SHALL BE PROVIDED FOR, PRIOR TO CASTING CONCRETE.

G6 CONSTRUCTION LOADS
STRUCTURES HAVE BEEN DESIGNED FOR OPERATIONAL LOADS ON THE COMPLETED STRUCTURE. DURING CONSTRUCTION, THE STRUCTURES SHALL BE PROTECTED BY BRACING AND SUPPORTS AS REQUIRED. THE CONTRACTOR IS RESPONSIBLE FOR THE DESIGN AND MAINTENANCE OF TEMPORARY SUPPORTS. THE DESIGN OF THE TEMPORARY SUPPORTS SHALL BE PERFORMED BY A LICENSED ENGINEER HIRED BY THE CONTRACTOR.

G7 DRAINAGE SURFACES
SLOPE DRAINAGE SURFACES UNIFORMLY TO DRAIN. SLOPE SHALL BE 1/4" PER FOOT EXCEPT WHERE NOTED OTHERWISE ON THE PLANS.

G9 FLOOR ELEVATIONS
SEE CIVIL DRAWINGS FOR ELEVATIONS NOT CALLED OUT.

F. STRUCTURAL DESIGN

F1 DESIGN CODE
DESIGN IS IN ACCORDANCE WITH THE 2012 EDITION OF THE INTERNATIONAL BUILDING CODE. THE ABOVE SHALL GOVERN EXCEPT WHERE OTHER APPLICABLE CODES OR THE CONTRACT DOCUMENTS ARE MORE RESTRICTIVE.

F2 DESIGN SOIL PRESSURE FOR FOUNDATIONS
DESIGN BASED ON 2012 INTERNATIONAL BUILDING CODE TABLE 1806.2
(1) ALLOWABLE BEARING PRESSURE = 2000 PSF
(2) LATERAL BEARING = 150 PCF
(3) COEFFICIENT OF FRICTION = 0.25
(4) FROST DEPTH = 12 IN

F3 NON-STRUCTURAL COMPONENTS DESIGN
EQUIPMENT RESTRAINTS, EQUIPMENT BASES, EQUIPMENT ANCHORAGE AND NON-STRUCTURAL ITEMS THAT ARE NOT PART OF THE STRUCTURE SHALL BE CONTRACTOR/MANUFACTURER DESIGNED IN ACCORDANCE WITH THE CURRENT CODES, STAMPED AND SIGNED BY AN ENGINEER LICENSED IN WASHINGTON. THESE COMPONENTS ARE IDENTIFIED ON THE DRAWINGS AS DESIGNED BY OTHERS.

L. DESIGN LOADS

A. LIVE
(1) SLAB ON GRADE OR ROOF SLAB AT GRADE = 250 PSF / 8000 LB CONCENTRATED (NON-REDUCIBLE)
(2) ROOF = 25 PSF

B. SNOW
(1) GROUND SNOW LOAD Pg = 20 PSF
(2) RISK CATEGORY III
(3) IMPORTANCE FACTOR = 1.1
(4) EXPOSURE FACTOR Ce = 1.0
(5) THERMAL FACTOR Ct = 1.2
(6) FLAT ROOF SNOW LOAD Pf = 19 PSF

C. WIND
(1) ULTIMATE WIND SPEED, Vult = 115 MPH
(2) NOMINAL WIND SPEED, Vasd = 89 MPH
(3) RISK CATEGORY III
(4) IMPORTANCE FACTOR =1.1
(5) WIND EXPOSURE B

D. SEISMIC
(1) RISK CATEGORY III
(2) IMPORTANCE FACTOR = 1.25
(3) SITE CLASS = D
(4) S_S = 1.279 S_1 = 0.496
(5) S_{DS} = 0.853 S_{D1} = 0.497
(6) SEISMIC DESIGN CATEGORY = D

C. CONCRETE

C1 APPLICABLE CODE
CONCRETE DESIGN AND CONSTRUCTION SHALL CONFORM TO THE 2011 EDITION OF THE ACI BUILDING CODE REQUIREMENTS FOR STRUCTURAL CONCRETE, ACI 318.

C2 REINFORCING STEEL DETAILS
DETAILING, FABRICATION AND ERECTION OF REINFORCING STEEL, UNLESS OTHERWISE NOTED, SHALL BE IN ACCORDANCE WITH DETAILS AND DETAILING OF CONCRETE REINFORCEMENT ACI 315.

C3 DESIGN STRENGTHS
A. CAST-IN-PLACE CONCRETE
(1) GENERAL USE - f'c = 4500 psi @ 28 DAYS
B. MAX WATER TO CEMENTITIOUS MATERIAL RATIO = 0.45
C. FOR NOMINAL MAXIMUM AGGREGATE SIZE OF 3/4" OR 1", AIR CONTENT = 6%
FOR NOMINAL MAXIMUM AGGREGATE SIZE OF 1 1/2", AIR CONTENT = 5.5%
D. REINFORCING STEEL SHALL BE ASTM A 615, GRADE 60.
E. GROUT SHALL BE ASTM C 1107 WITH f'c = 7000 psi @ 28 DAYS, NON-SHRINK, NON-METALLIC
F. CONCRETE SHALL BE PROPORTIONED TO MEET THE AVERAGE COMPRESSIVE STRENGTH REQUIREMENTS IN ACI 318, CHAPTER 5.

C4 CONCRETE COVER
CONCRETE COVER FOR REINFORCING BARS SHALL BE AS FOLLOWS WITH MINIMUM COVER OF ONE BAR DIAMETER.

A. FOOTINGS AND FOUNDATION MATS CAST ON GROUND - 3"
B. FORMED OR FINISHED SURFACES TO BE IN CONTACT WITH GROUND, WEATHER, OR WATER - 2"
C. FORMED OR FINISHED SURFACES NOT TO BE EXPOSED TO GROUND, WEATHER, OR WATER:
(1) BEAMS AND COLUMNS - 1 1/2"
(2) SLABS, JOISTS AND WALLS - 1"

C5 EXTRA ACCESSORY BARS
ASIDE FROM NORMAL ACCESSORIES USED TO HOLD REINFORCING STEEL IN POSITION THE FOLLOWING SHALL BE ADDED:

A. IN SLABS NO. 4 RAISER BARS @ 48"MAXIMUM TO SUPPORT TOP REINFORCING STEEL.
B. IN WALLS WITH TWO CURTAINS, NO. 3 U OR Z SHAPE SPACERS @6'-0"OC EW.

C6 DOWELS
DOWELS SHALL BE AT LEAST THE SAME SIZE AND SPACING AS BARS WITH WHICH THEY ARE LAPPED. THE LAP EMBEDMENT SHALL BE AS RECOMMENDED BY ACI 318 OR AS NOTED.

C7 BAR SPLICES
SPLICES OF REINFORCING STEEL BAR SHALL BE IN ACCORDANCE WITH SCHEDULE SHOWN ON CONCRETE DETAILS AND ACI 318 AND SHALL BE CLASS B UNLESS OTHERWISE NOTED. THE LENGTH OF LAP SPLICE OF BARS OF DIFFERENT DIAMETER SHALL BE BASED ON THE SMALLER DIAMETER. BAR SPLICES MAY ALSO BE MADE BY WELDING IN ACCORDANCE WITH AWS SPEC D 1.4 IF APPROVED BY THE ENGINEER.

C8 RESTRICTED BAR ANCHORAGE
IN CASES WHERE REINFORCING BARS CANNOT BE EXTENDED AS FAR AS REQUIRED DUE TO THE LIMITED EXTENT OF THE ADJACENT CONCRETE STRUCTURE, THE BARS SHALL EXTEND AS FAR AS POSSIBLE AND END IN STANDARD HOOKS.

C9 STANDARD HOOKS
BARS ENDING IN RIGHT ANGLE BENDS OR HOOKS SHALL CONFORM TO THE REQUIREMENTS OF ACI 318.

C10 CHAMFERS
EXCEPT AS OTHERWISE REQUIRED, EXPOSED CONCRETE CORNERS AND EDGES SHALL HAVE 3/4" CHAMFERS. RE-ENTRANT CORNERS SHALL NOT HAVE FILLETS.

C11 CAST-IN-PLACE CONCRETE ANCHORS
ANCHORS SHALL BE HEADED BOLTS OF ASTM F1554 GRADE 55 MATERIAL WITH ASTM A563 HEAVY HEXAGONAL NUTS AND ASTM A36 PLATE WASHERS WITH MINIMUM SIZE CONFORMING TO TABLE 14-2 OF THE CURRENT AISC STEEL CONSTRUCTION MANUAL, UNLESS NOTED OTHERWISE. ALTERNATELY, ANCHORS SHALL BE THREADED AND NUTTED ROD CONFORMING TO ASTM F1554 GRADE 55 (WITH SUPPLEMENT S1) WITH THE EMBEDDED NUT THREADED ON AND WELDED TO THE ROD. ALL MATERIALS EXPOSED TO MOISTURE OR WEATHER SHALL BE HOT DIP GALVANIZED UNLESS NOTED OTHERWISE.

C12 POST-INSTALLED ADHESIVE ANCHORS
ADHESIVE ANCHORS AND THEIR PROPERTIES SUCH AS DIAMETER, SPACING, EDGE DISTANCE, EMBEDMENT AND MATERIAL/FINSH SHALL CONFORM TO DETAILS IN THESE DRAWINGS. UNLESS NOTED OTHERWISE, ADHESIVE ANCHORS SHALL BE STAINLESS STEEL THREADED ROD, SET WITH HILTI HIT HY 200-R. AT CONTRACTOR'S OPTION, AN EQUIVALENT ALTERNATE ADHESIVE ANCHOR MAY BE SUBSTITUTED, PROVIDED THE ALTERNATE PRODUCT SUBMITTAL IS SUPPLEMENTED WITH CALCULATIONS INDICATING THAT THE PRODUCT MEETS OR EXCEEDS PROPERTIES OF THE ORIGINAL PRODUCT. THE SUPPLEMENTAL CALCULATIONS SHALL BE STAMPED AND SIGNED BY A PROFESSIONAL ENGINEER LICENSED IN THE STATE OF PROJECT LOCATION. ACCEPTABLE ADHESIVE ANCHORS SHALL BE ICC APPROVED FOR SEISMIC LOADS AND USE IN CRACKED AND UNCRACKED CONCRETE. SUBMITTAL SHALL INCLUDE PRODUCT ESR REPORT.

C13 POST-INSTALLED MECHANICAL ANCHORS
MECHANICAL ANCHORS AND THEIR PROPERTIES SUCH AS DIAMETER, SPACING, EDGE DISTANCE, EMBEDMENT AND MATERIAL/FINISH SHALL CONFORM TO DETAILS IN THESE DRAWINGS. UNLESS NOTED OTHERWISE, MECHANICAL ANCHORS SHALL BE STAINLESS STEEL HILTI KWIK BOLT-TZ. AT CONTRACTOR'S OPTION, AN EQUIVALENT ALTERNATE MECHANICAL ANCHOR MAY BE SUBSTITUTED, PROVIDED THE ALTERNATE PRODUCT SUBMITTAL IS SUPPLEMENTED WITH CALCULATIONS INDICATING THAT THE PRODUCT MEETS OR EXCEEDS PROPERTIES OF THE ORIGINAL PRODUCT. THE SUPPLEMENTAL CALCULATIONS SHALL BE STAMPED AND SIGNED BY A PROFESSIONAL ENGINEER LICENSED IN THE STATE OF PROJECT LOCATION. ACCEPTABLE MECHANICAL ANCHORS SHALL BE ICC APPROVED FOR SEISMIC LOADS AND USE IN CRACKED AND UNCRACKED CONCRETE. SUBMITTAL SHALL INCLUDE PRODUCT ESR REPORT.

C14 INSTALLATION OF POST-INSTALLED ANCHORS
ALL MECHANICAL AND ADHESIVE ANCHORS SHALL BE INSTALLED IN STRICT CONFORMANCE TO MANUFACTURER'S DIRECTIONS.

C15 CONSTRUCTION JOINTS
LOCATION OF CONSTRUCTION JOINTS SHALL HAVE THE APPROVAL OF THE ENGINEER. CONSTRUCTION JOINTS SHALL BE DETAILED AS SHOWN ON THE DRAWINGS. UNLESS A METAL KEYED FORM IS USED, ALL CONSTRUCTION JOINTS SHALL BE ROUGHENED TO A MINIMUM 1/4" AMPLITUDE. ALL JOINT SURFACES SHALL BE THOROUGHLY CLEANED TO REMOVE GREASE, LOOSE CONCRETE, AND LAITANCE OR OTHER BOND REDUCING MATERIAL. SURFACES SHALL BE SATURATED SURFACE DRY PRIOR TO PLACING FRESH CONCRETE.

C16 SPECIAL WEATHER CONCRETING
FOR SPECIAL WEATHER CONCRETING (HOT & COLD CONCRETING) ADHERE TO REPORTS OF ACI COMMITTEE 305, "HOT WEATHER CONCRETING", AND ACI 306, "COLD WEATHER CONCRETING."

C17 CURING
CONCRETE SHALL BE CURED IN ACCORDANCE WITH ACI308.1.

C18 SLOPING SLABS
MONOLITHIC SLABS WITH TOPS THAT ARE SLOPED SHALL HAVE BOTTOMS SLOPED THE SAME AMOUNT, MAINTAINING A UNIFORM SLAB THICKNESS, UNLESS OTHERWISE NOTED.

C19 SHAPED CONCRETE
SHAPED CONCRETE SHALL BE NON-SHRINK NON-METALLIC GROUT MEETING ASTM C1107 WITH f'c = 7000 psi @ 28 DAYS. AT CONTRACTOR'S OPTION, SHAPED CONCRETE MAY BE A CEMENT GROUT REINFORCED WITH A MINIMUM OF #4@12 PLACED WITH 2" CLEAR FROM THE SURFACE. CEMENT GROUT SHALL BE ONE PART TYPE II PORTLAND CEMENT, 1 TO 2 PARTS FINE AGGREGATE WITH SUFFICIENT WATER TO IMPART WORKABILITY BUT NOT SUCH THAT GROUT WILL FLOW.

E. EXISTING CONCRETE MODIFICATIONS

E1 GENERAL
THE FOLLOWING NOTES ON MODIFICATION OF EXISTING CONCRETE ARE GENERAL AND APPLY TO THE ENTIRE PROJECT, UNLESS OTHERWISE SPECIFIED.

E2 SURFACES
A. EXISTING CONCRETE SURFACES TO BE JOINED WITH NEW CONCRETE SHALL BE THOROUGHLY CLEANED AND ROUGHENED TO MIN 1/4 INCH AMPLITUDE AND SATURATED SURFACE DRY JUST PRIOR TO PLACEMENT OF NEW CONCRETE. PROVIDE EXPANDING WATERSTOP BETWEEN EXISTING AND NEW CONCRETE WHERE WATERTIGHT CONSTRUCTION IS REQUIRED.

B. SURFACES EXPOSED TO VIEW SHALL BE NEATLY SAW CUT TO A DEPTH OF 1/2 INCH PRIOR TO REMOVING THE EXISTING CONCRETE. HIDDEN SURFACES SHALL RECEIVE A TOOLED JOINT BETWEEN NEW AND EXISTING CONCRETE.

E3 DOWELS
DOWELS SHALL BE GROUTED INTO DRILLED HOLES PER TYPICAL DETAILS.

E4 OPENINGS
WHERE "PLUG EXISTING OPENING" IS INDICATED, CONTRACTOR SHALL REMOVE ANY ATTACHED METALWORK, CONCRETE CURBS OR PROJECTIONS. ROUGHEN AND KEY EXISTING CONCRETE, SATURATE SURFACE DRY SURFACES, AND POUR NEW CONCRETE FLUSH WITH ADJACENT SURFACES. NEW OPENING IN EXISTING CONCRETE SHALL BE CUT ONE INCH OVERSIZE, AND GROUT FINISHED TO THE REQUIRED SIZE. NEW OPENINGS IN EXISTING CONCRETE THAT WILL BE EXPOSED TO VIEW SHALL BE CUT TO THE REQUIRED FINISH SIZE. EXPOSED REINFORCING BARS SHALL BE CUT BACK 1" BELOW CONCRETE SURFACE AND REPAIRED WITH GROUT.

E5 CUT SURFACES
EXPOSED REINFORCING BARS IN CUT SURFACES SHALL BE CUT BACK 1" BELOW CONCRETE SURFACE AND REPAIRED WITH GROUT.

S. STAINLESS STEEL

S1 CODES AND SPECIFICATIONS
STAINLESS STEEL CONSTRUCTION SHALL CONFORM TO THE SPECIFICATIONS AND STANDARDS AS CONTAINED IN THE 14TH EDITION OF THE AISC MANUAL OF STEEL CONSTRUCTION IN CONJUNCTION WITH AISC DESIGN GUIDE 27.

S2 MATERIAL
STRUCTURAL SHAPES, BARS, AND PLATES INDICATED ON THE DRAWINGS SHALL BE STAINLESS STEEL TYPE 316. WHERE SHAPES, BARS OR PLATES WILL BE WELDED, THE MATERIAL SHALL BE TYPE 316L.

PLATE, SHEET AND STRIP SHALL BE ASTM A240/A480. BARS AND SHAPES SHALL BE ASTM A276/A479.

BOLTS AND OTHER FASTENERS SHALL BE STAINLESS STEEL TYPE 316. STAINLESS STEEL BOLTS AND THREADED ROD SHALL CONFORM TO ASTM F593 ALLOY GROUP 2 CONDITION CW. STAINLESS STEEL NUTS SHALL CONFORM TO ASTM F594 ALLOY GROUP 2 CONDITION CW. STAINLESS STEEL WASHERS SHALL BE STAINLESS STEEL TYPE 316 MEETING THE DIMENSIONAL REQUIREMENTS OF ASTM F436.

H. FOUNDATIONS

H1 SUBGRADE
SUBGRADE PREPARATION SHALL CONFORM TO THE FOLLOWING REQUIREMENTS:

MOISTEN SUBGRADE BEFORE PLACING CONCRETE.

A. EXPOSED SUBGRADES FOR FOOTINGS AND OTHER STRUCTURES SHALL BE UNDISTURBED PRIOR TO PLACING STRUCTURAL FILL.

B. SUBGRADE SHALL BE INSPECTED BY AN OWNER'S REPRESENTATIVE PRIOR TO PLACING STRUCTURAL FILL.

C. IF YIELDING AND/OR SATURATED SUBGRADE IS PRESENT IN THE EXCAVATION, OVEREXCAVATE THAT MATERIAL AS DIRECTED BY THE OWNER'S REPRESENTATIVE AND BACKFILL WITH STRUCTURAL FILL TO THE REQUIRED FOOTING ELEVATION AS SHOWN ON THE DRAWINGS AND COMPACTED.

H2 STRUCTURAL FILL
STRUCTURAL FILL MATERIALS SHALL BE AS SHOWN ON THE CIVIL DRAWINGS.

A. GRANULAR MATERIAL SHALL BE PLACED AND COMPACTED. FILL SHALL BE PLACED AND COMPACTED IN 12 INCH LIFTS TO AT LEAST 95% STANDARD PROCTOR DENSITY (SPD), WITH DENSITY TESTS CARRIED OUT EVERY SECOND LIFT. STRUCTURAL FILL SHALL EXTEND LATERALLY BEYOND THE EDGE OF THE FOOTING OR STRUCTURE AT LEAST EQUAL TO THE HEIGHT OF THE FILL PLACED.

B. PLACE GRANULAR MATERIAL FILL AS REQUIRED BY NOTE H1-C.

H3 EXISTING FOUNDATIONS
CONTRACTOR SHALL ENSURE THAT EXISTING FOUNDATIONS ARE ADEQUATELY PROTECTED FROM UNDERMINING AND INSTABILITY DUE TO ADJACENT EXCAVATION FOR NEW COMPONENTS. PROVIDE ADEQUATE BRACING /SHORING TO PREVENT DAMAGE TO EXISTING AND NEW FOUNDATIONS AS NECESSARY.

K. SUBMITTALS

K1 STRUCTURAL STEEL AND METAL FABRICATIONS
SUBMIT SHOP DRAWINGS FOR ALL STRUCTURAL STEEL AND METAL FABRICATIONS.

K2 REINFORCING STEEL
SUBMIT SHOP DRAWINGS FOR REINFORCING STEEL FABRICATION.

K3 CONCRETE
SUBMIT CONCRETE MIX DESIGN AND CONCRETE CYLINDER TEST RESULTS PER THE REQUIREMENTS OF ACI 318 CHAPTER 5.

K4 POST-INSTALLED ANCHORS
SUBMIT POST-INSTALLED ANCHOR PRODUCT INFORMATION.

K5 WELDING
SUBMIT WELDER QUALIFICATIONS AND WELD PREQUALIFICATIONS.

K6 WEATHER COVER
SEE S-103 FOR SUBMITTAL DETAILS.

K7 HATCHES
SUBMIT MANUFACTURER'S INFORMATION FOR THE SPECIFIC HATCHES REQUIRED. SEE DRAWING S-102.

K8 FRP LADDERS
SUBMIT MANUFACTURER'S INFORMATION FOR THE SPECIFIC LADDERS REQUIRED. SEE DRAWINGS S-101 AND S-102.

REV	DATE	DES	CHECK	APPROVALS	REVISION DESCRIPTION

DATE: 07-07-14	CIVIL REVIEW:
DESIGNED:	ARCH REVIEW:
DRAWN:	STRUC REVIEW:
CHECKED:	MECH REVIEW:
APPROVED:	

TETRA TECH
www.tetratech.com
1420 Fifth Avenue, Suite 600
Seattle, Washington 98101
Phone: 206-883-9300 Fax: 206-883-9301

CITY OF FIFE
PS-10 REHABILITATION / PS-5 AND PS-6 WETWELL COATING

STRUCTURAL GENERAL NOTES

FILE NO:
PROJECT NO: 135-12584-14002
DWG NO: S-001
SHEET: OF

This drawing is full size when 22"x 34" or is reduced to half size when 11"x17"

COPYRIGHT 2010, TETRA TECH, ALL RIGHTS RESERVED

Path: P:\12584\135-12584-14001\CAD\SheetFiles\S-001 STRUCTURAL GENERAL NOTES.dwg Plot date: Jul 07, 2014-2:40:08pm CAD User: bryan.thomas.
Xref Filename: ! G-BS-22x34nz ! GS-HRN-WA ! _HRN-SIG !

SURVEY LEGEND

- BENCH MARK
- CONTROL POINT (AS NOTED)
- BRASS CAP/SURFACE MON. (FOUND AS NOTED)
- ELECTRIC VAULT
- ELECTRIC METER
- ELECTRIC CABINET
- UNKNOWN VAULT
- GAS VALVE
- SIGN
- LIGHT
- FIRE HYDRANT
- WATER VALVE
- WATER METER
- IRRIGATION CONTROL VALVE
- SEWER MANHOLE
- STORM CATCH BASIN
- TELEPHONE MANHOLE
- TELEPHONE PULLBOX
- TELEPHONE RISER
- DECIDUOUS TREE
- CONIFEROUS TREE
- CB CATCH BASIN
- SSMH SANITARY SEWER MANHOLE
- C&G CURB AND GUTTER
- ECC EXTRUDED CONCRETE CURB

- PUBLIC RIGHT-OF-WAY LINE (QUIT CLAIM DEED #8401230137)
- ROAD CENTERLINE
- SS SANITARY SEWER LINE
- SD STORM DRAIN LINE
- W WATER LINE
- T UNDERGROUND TELEPHONE
- P UNDERGROUND ELECTRICAL / POWER
- IRR SPRINKLER LINE
- FO UNDERGROUND FIBER OPTIC
- FM SEWAGE FORCEMAIN

SURVEY NOTES

1 BASIS OF BEARING WASHINGTON COORDINATE SYSTEM, SOUTH ZONE, NAD83-2011 EPOCH 2010.00 COORDINATES, BASED ON THE WASHINGTON STATE REFERENCE NETWORK.

2. VERTICAL DATUM NGVD 29, BASED ON THE CITY OF FIFE BENCHMARK PROGRAM PUBLISHED 5-16-2003.

3. PROJECT BENCHMARKS POINT DESIGNATION 56, REFERENCE NUMBER FS-6, "X" IN SOUTHEAST CORNER OF CONCRETE PAD OF PHONE BOX #4605. NORTH SIDE OF 20TH STREET EAST AT JUNCTION OF 20TH STREET EAST AND FRANK ALBERT ROAD, 15 FEET WEST OF DRIVE TO 4609 20TH STREET EAST. NGVD 29 ELEVATION 12.27. POINT DESIGNATION 58, REFERENCE NUMBER FS-8, "X" CENTER OF SIDEWALK SOUTHEAST CORNER OF BRIDGE OVER RAILROAD ON FRANK ALBERT ROAD. NGVD 29 ELEVATION 53.58.

4. SITE BENCHMARKS DAVID EVANS AND ASSOCIATES, INC. (DEA) CONTROL POINTS 3000 AND 3001, AS SHOWN HEREON.

5. METHODOLOGY FIELD MEASUREMENTS FOR THIS SURVEY WERE PERFORMED USING A LEICA MS 50 TOTAL STATION, LEICA GS14GPS RECEIVER, AND LEICA HOS6000 LASER SCANNER. THIS SURVEY COMPLIES WITH THE MINIMUM REQUIRED "ERROR OF CLOSURE" OF 1:10,000 FOR WASHINGTON STATE PLANE COORDINATES AS SET FORTH PER W.A.C. 332-130-090.

6. PROPERTY LINES THIS IS NOT A BOUNDARY SURVEY, RIGHT OF WAY LINES SHOWN HEREON ARE BASED ENTIRELY UPON PIERCE COUNTY AUDITOR RECORD INFORMATION, QUIT CLAIM DEED 8401230137, AND RECORDS OF SURVEY.

7. MONUMENTATION VISITATION ALL SURVEY MONUMENTS AND OTHER SURVEY MARKERS SHOWN HEREON WERE VISITED DURING DECEMBER, 2013 UNLESS OTHERWISE INDICATED.

8. ENCUMBRANCES THIS SURVEY WAS PERFORMED WITHOUT THE BENEFIT OF A TITLE REPORT, ACCORDINGLY, ANY EASEMENTS OR RESTRICTIONS OF RECORD WHICH MAY BE REVEALED IN A TITLE REPORT HAVE NOT BEEN INCLUDED HEREON.

9. CONTOUR INTERVAL 1 FOOT

10. 1-800-424-5555 OR 811 MUST BE CALLED NOT LESS THAN 48 HOURS BEFORE BEGINNING EXCAVATION WHERE ANY UNDERGROUND UTILITIES MAY BE LOCATED. FAILURE TO DO SO COULD MEAN BEARING SUBSTANTIAL REPAIR COSTS. (UP TO THREE TIMES THE COST OF REPAIRS TO THE SERVICE).

CONSTRUCTION NOTES

1. PROVIDE CATCH BASIN INLET PROTECTION IN ACCORDANCE WITH STANDARD SPECIFICATION 8-01.3(9)D

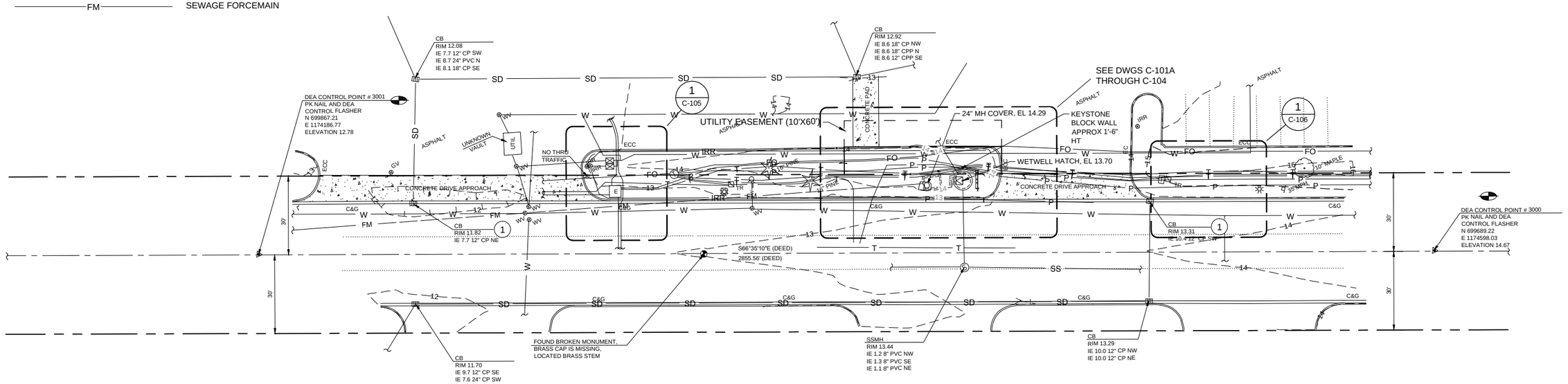

EXISTING SITE PLAN

0 10' 20' 40'
SCALE: 1" = 20'

REV	DATE	DES	CHECK	APPROVALS	REVISION DESCRIPTION

DATE: 07-07-14	CIVIL REVIEW:
DESIGNED:	ARCH REVIEW:
DRAWN:	STRUC REVIEW:
CHECKED:	MECH REVIEW:
APPROVED:	

This drawing is full size when 22"x 34" or is reduced to half size when 11"x17"

TETRA TECH
www.tetratech.com
1420 Fifth Avenue, Suite 600
Seattle, Washington 98101
Phone: 206-883-9300 Fax: 206-883-9301

BRUCE R. GRAVELLE, STATE OF WASHINGTON, 23364, REGISTERED PROFESSIONAL ENGINEER, 7-7-14

CITY OF FIFE
PS-10 REHABILITATION / PS-5 AND PS-6 WETWELL COATING
PS-10

EXISTING SITE PLAN

FILE NO:
PROJECT NO: 135-12584-14002
DWG NO: C-101
SHEET: OF

COPYRIGHT 2010, TETRA TECH, ALL RIGHTS RESERVED

Path: \\TWRS318FS1\Projects\12584\135-12584-1400\CAD\SheetFiles\C-101 EXISTING SITE PLAN AND PUMP STATION DETAILS.dwg Plot date: Jul 09, 2014-02:47:18pm CAD User: mlecarter
Xref Filename: | D-SC-VAULT-EX | D-FP-VAULT-EX | C-XP-TOPO-CONTOURS | C-XP-TOPO | G-BS-22x34hz | C-SP-SITE | GS-BRG-WA | _BRG-SIG |

CONSTRUCTION NOTES

1. REMOVE EXISTING 4' x 6' x 6' HT VAULT AND ALL PIPING AND VALVING.
2. REMOVE PORTION OF EXISTING 6" DIA FORCE MAIN AS REQUIRED TO CONSTRUCT NEW VALVE VAULT. SEE SHEET C-103.
3. REMOVE EXISTING 4" DIP DISCHARGE AND DRAIN PIPING FROM APPROXIMATELY 1'-0" FROM THE MANHOLE WALL TO THE EXISTING VAULT.
4. REMOVE EXISTING 1 1/2 HP SUBMERSIBLE PUMP, DISCHARGE ELBOW, AND GUIDE RAILS, TYP OF TWO.
5. REMOVE EXISTING ELECTRICAL EQUIPMENT MOUNTED ON PLYWOOD BOARD. SEE ELECTRICAL DRAWINGS.
6. CLEAR AND GRUB AREA WITHIN DEMOLISHED CURB PERIMETER TO A MINIMUM DEPTH OF 6-INCHES BELOW EXISTING GRADE
7. THE EXISTING CENTURY LINK CONDUIT (℄ EL <10.5') IS TO REMAIN IN PLACE AS INDICATED. WORK AROUND AND PROTECT THE CONDUIT DURING INSTALLATION OF THE NEW FACILITIES. SEE SPECIAL PROVISION 1-09.6.
8. CUT-OFF EXISTING EMBEDDED LADDER RUNGS AND GRIND METAL DOWN 1/8" BELOW CONCRETE SURFACE.
9. THE EXISTING CENTURY LINK FIBER OPTIC CONDUIT ℄ EL <10.5') IS TO REMAIN IN PLACE AS INDICATED. WORK AROUND AND PROTECT THE CONDUIT DURING INSTALLATION OF THE NEW FACILITIES. SEE SPECIAL PROVISION 1-09.6.
10. PAVEMENT IS TO BE PATCHED IN ACCORDANCE WITH DETAIL 2, DWG C-001. DIMENSION OF THE AC PATCH AS REQUIRED FOR THE WORK.
11. THE 3/4" STREET LIGHTING CONDUIT IS APPROXIMATELY 1.0 FT(±) BELOW TOP OF CURB. REMOVE AND REPLACE PER THE ELECTRICAL DRAWINGS.
12. TEMPORARILY CAP THE EXISTING 1/2" IRR. INSTALL NEW SPRINKLER LINE PER DRAWING C-103.
13. AC PAVEMENT REMOVAL AND PATCHING IN THE AREA NORTH OF THE PUMP STATION SITE IS AS REQUIRED FOR THE WORK, INCLUDING THE RELOCATION OF THE PRIMARY POWER CONDUIT. SEE THE ELECTRICAL DRAWINGS
14. 2" POWER CONDUIT SERVING PUMP STATION CL EL 11.90 (±) (TO BE REMOVED, SEE ELECTRICAL DRAWINGS)
15. 4" TACOMA POWER PRIMARY CONDUIT CL EL 10.67 (±) REMOVE AND RELOCATE, SEE ELEC DWGS.
16. TACOMA POWER SPARE CONDUIT (CL EL UNKNOWN). CONTRACTOR TO RELOCATE. SEE ELEC DWGS.
17. THE EXISTING 2" WATERLINE IS BEING ABANDONED WITH THE EAST AND WEST WATER SYSTEM IMPROVEMENTS. DEE DWGS C-105 AND C-106

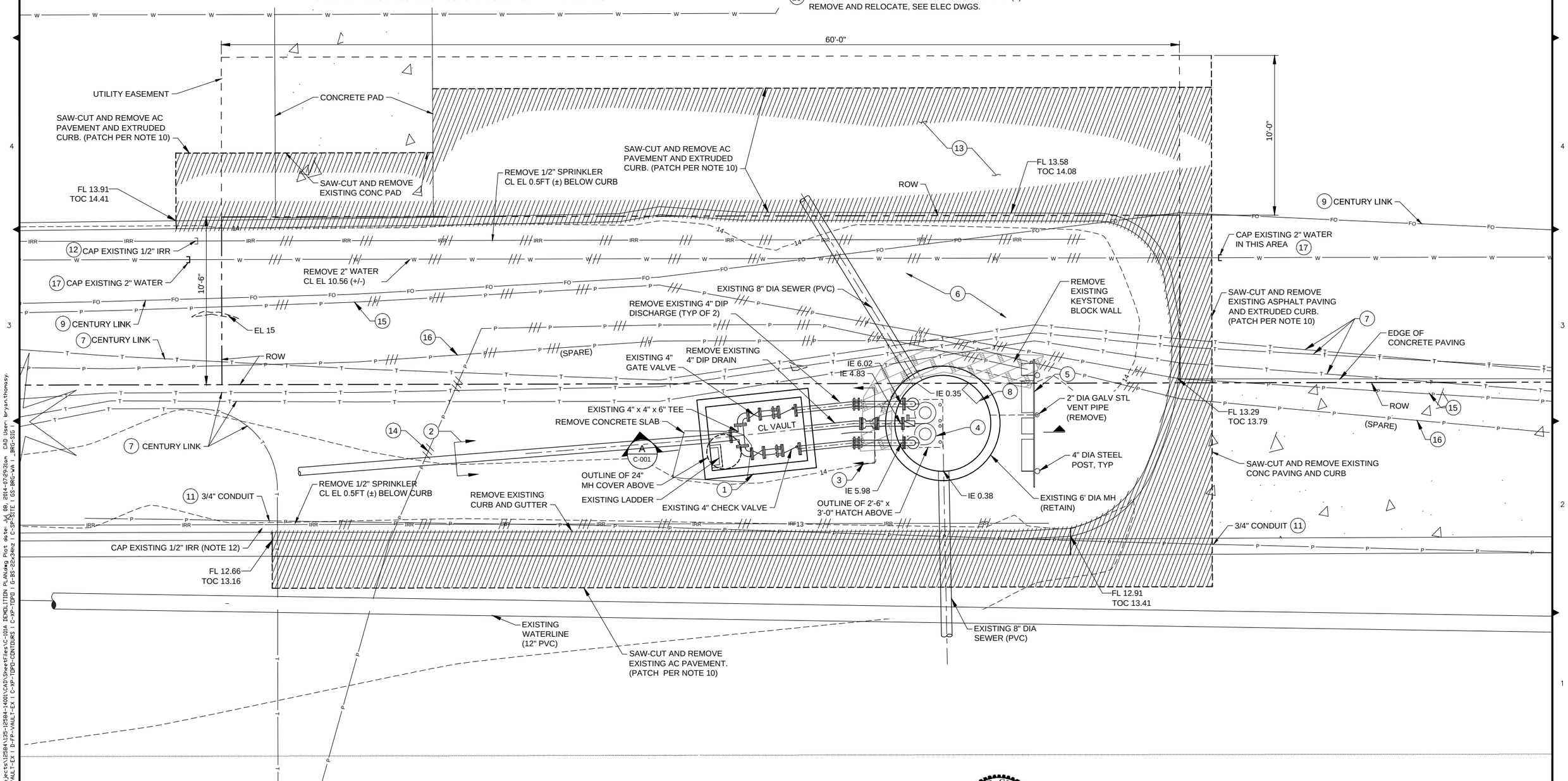

REV	DATE	DES	CHECK	APPROVALS	REVISION DESCRIPTION

DATE: 07-07-14	CIVIL REVIEW:
DESIGNED:	ARCH REVIEW:
DRAWN:	STRUC REVIEW:
CHECKED:	MECH REVIEW:
APPROVED:	

TETRA TECH
www.tetratech.com
1420 Fifth Avenue, Suite 600
Seattle, Washington 98101
Phone: 206-883-9300 Fax: 206-883-9301

BRUCE R. GRAVES, STATE OF WASHINGTON, 23364, REGISTERED PROFESSIONAL ENGINEER, 7-7-14

CITY OF FIFE
PS-10 REHABILITATION / PS-5 AND PS-6 WETWELL COATING
PS-10

SITE DEMOLITION PLAN

FILE NO:	
PROJECT NO:	135-12584-14002
DWG NO:	C-101A
SHEET:	OF

This drawing is full size when 22"x 34" or is reduced to half size when 11"x17"

COPYRIGHT 2010, TETRA TECH, ALL RIGHTS RESERVED

Path: \\TWRS38FS1\Projects\12584\135-12584-1400\CAD\SheetFiles\C-101A DEMOLITION PLAN.dwg Plot date: Jul 08, 2014-07:29:31am CAD User: bryan.thomas.
Xref Filename: | D-SC-VAULT-EX | D-FP-VAULT-EX | C-XP-TOPO-CONTOURS | C-XP-TOPO | G-BS-22x34hz | C-SP-SITE | GS-BRG-WA | _BRG-STG |

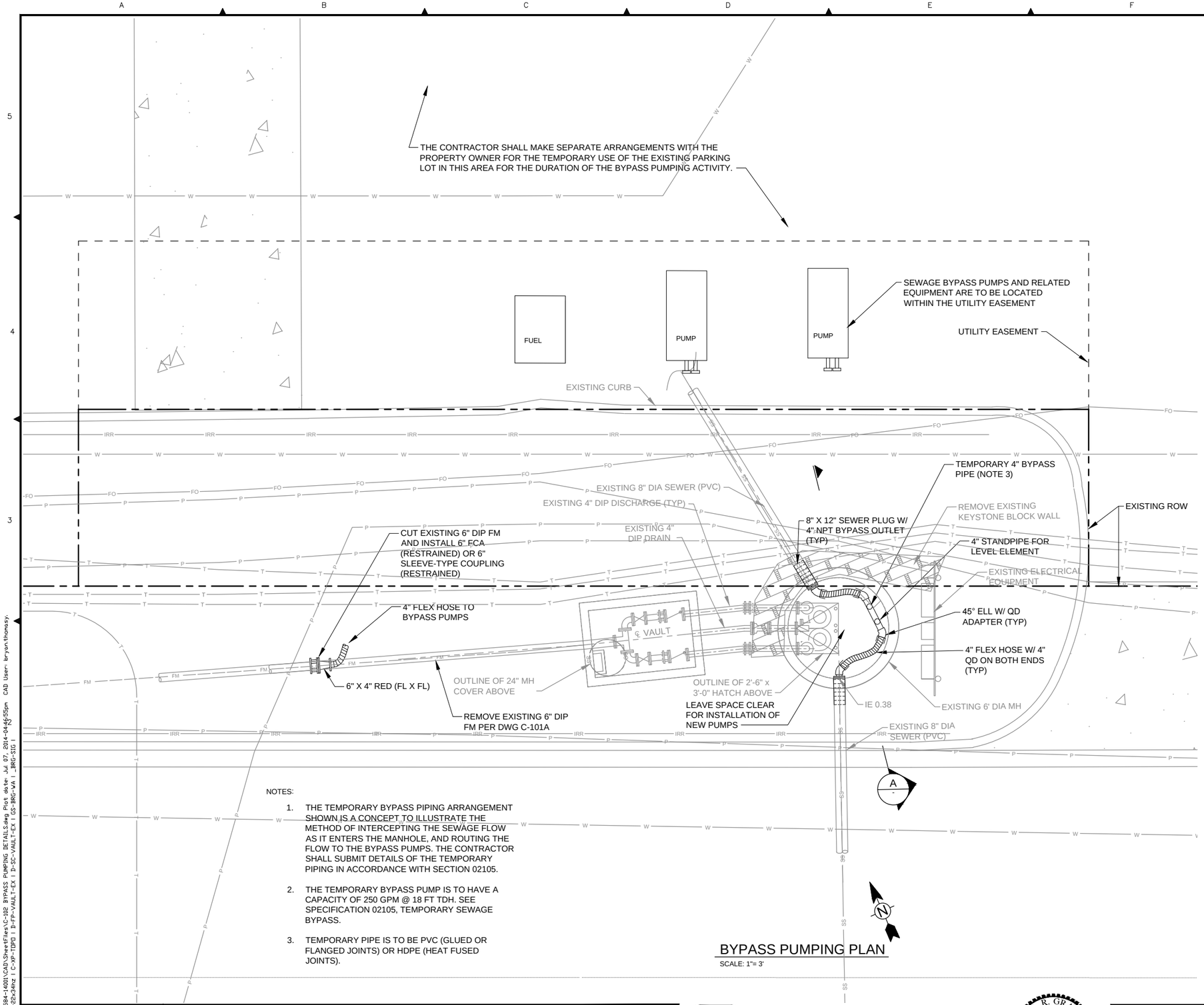

NOTES:

1. THE TEMPORARY BYPASS PIPING ARRANGEMENT SHOWN IS A CONCEPT TO ILLUSTRATE THE METHOD OF INTERCEPTING THE SEWAGE FLOW AS IT ENTERS THE MANHOLE, AND ROUTING THE FLOW TO THE BYPASS PUMPS. THE CONTRACTOR SHALL SUBMIT DETAILS OF THE TEMPORARY PIPING IN ACCORDANCE WITH SECTION 02105.
2. THE TEMPORARY BYPASS PUMP IS TO HAVE A CAPACITY OF 250 GPM @ 18 FT TDH. SEE SPECIFICATION 02105, TEMPORARY SEWAGE BYPASS.
3. TEMPORARY PIPE IS TO BE PVC (GLUED OR FLANGED JOINTS) OR HDPE (HEAT FUSED JOINTS).

BYPASS PUMPING PLAN

SCALE: 1"= 3'

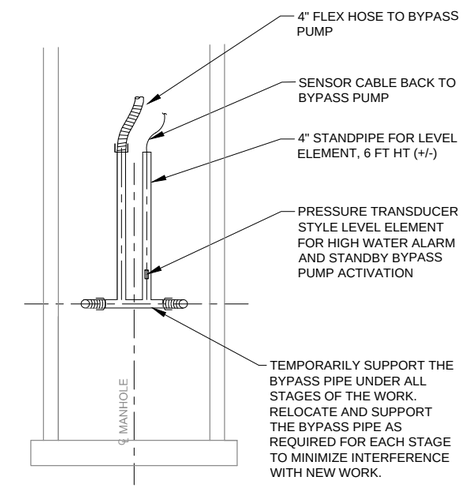

A SECTION

SCALE: 1"= 3'

REV	DATE	DES	CHECK	APPROVALS	REVISION DESCRIPTION

DATE: 07-07-14	CIVIL REVIEW:
DESIGNED:	ARCH REVIEW:
DRAWN:	STRUC REVIEW:
CHECKED:	MECH REVIEW:
APPROVED:	

TETRA TECH
www.tetratech.com
1420 Fifth Avenue, Suite 600
Seattle, Washington 98101
Phone: 206-883-9300 Fax: 206-883-9301

BRUCE R. GRAVELLE, STATE OF WASHINGTON, 23364, REGISTERED PROFESSIONAL ENGINEER, 7-7-14

CITY OF FIFE
PS-10 REHABILITATION / PS-5 AND PS-6 WETWELL COATING
PS-10

BYPASS PUMPING DETAILS

FILE NO:
PROJECT NO: 135-12584-14002
DWG NO: C-102
SHEET: OF

This drawing is full size when 22"x 34" or is reduced to half size when 11"x17"

COPYRIGHT 2010, TETRA TECH, ALL RIGHTS RESERVED

Path: P:\12584\135-12584-14001\CAD\SheetFiles\C-102 BYPASS PUMPING DETAILS.dwg Plot date Jul 07, 2014-04:55pm CAD User: bryan.thomas.
Xref Filename: | G:BS-22x34hz | C-XP-TOPO | D-FP-VAULT-EX | D-SC-VAULT-EX | GS-BRG-VA | _BRG-SIG |

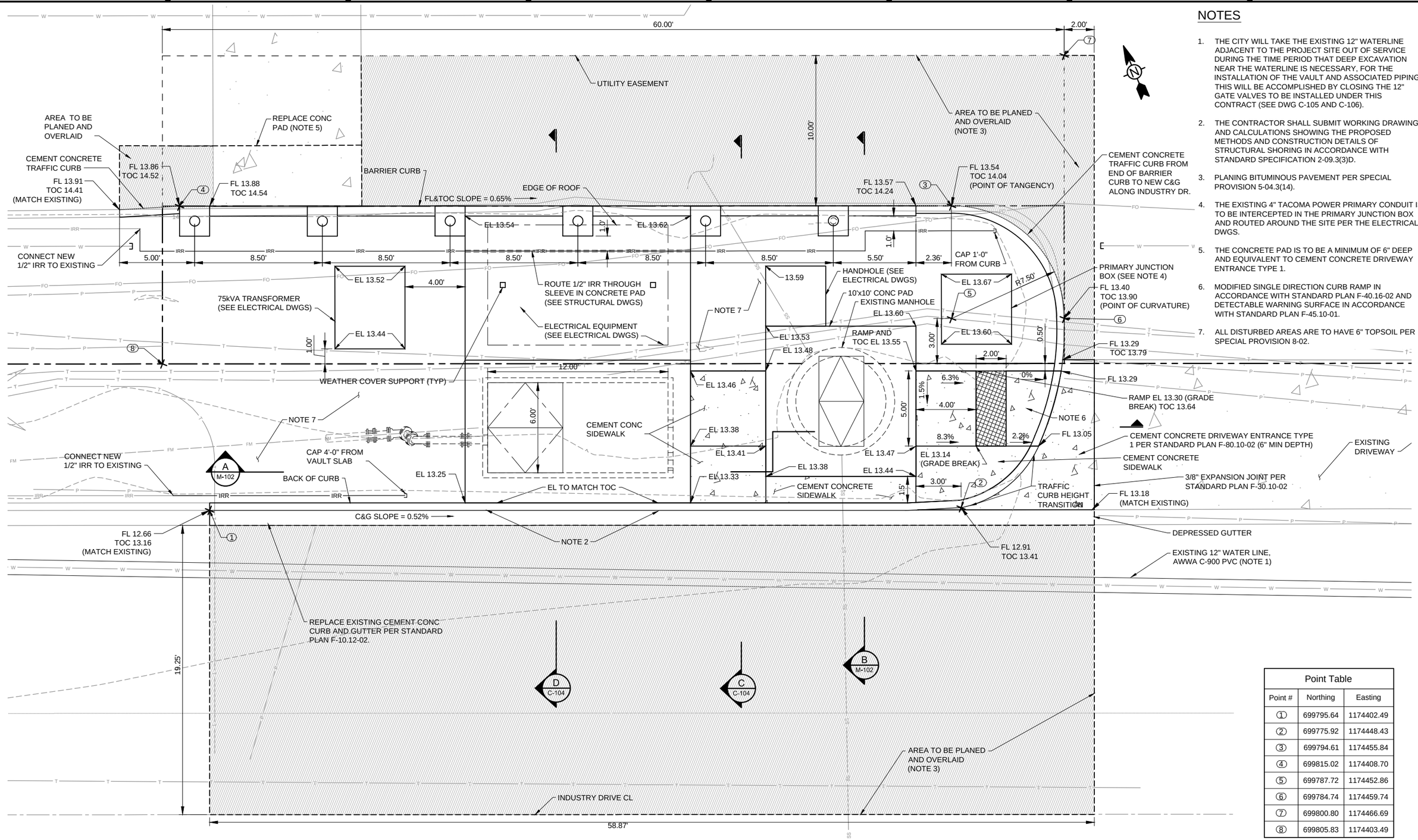

NOTES

1. THE CITY WILL TAKE THE EXISTING 12" WATERLINE ADJACENT TO THE PROJECT SITE OUT OF SERVICE DURING THE TIME PERIOD THAT DEEP EXCAVATION NEAR THE WATERLINE IS NECESSARY, FOR THE INSTALLATION OF THE VAULT AND ASSOCIATED PIPING. THIS WILL BE ACCOMPLISHED BY CLOSING THE 12" GATE VALVES TO BE INSTALLED UNDER THIS CONTRACT (SEE DWG C-105 AND C-106).
2. THE CONTRACTOR SHALL SUBMIT WORKING DRAWINGS AND CALCULATIONS SHOWING THE PROPOSED METHODS AND CONSTRUCTION DETAILS OF STRUCTURAL SHORING IN ACCORDANCE WITH STANDARD SPECIFICATION 2-09.3(3)D.
3. PLANING BITUMINOUS PAVEMENT PER SPECIAL PROVISION 5-04.3(14).
4. THE EXISTING 4" TACOMA POWER PRIMARY CONDUIT IS TO BE INTERCEPTED IN THE PRIMARY JUNCTION BOX AND ROUTED AROUND THE SITE PER THE ELECTRICAL DWGS.
5. THE CONCRETE PAD IS TO BE A MINIMUM OF 6" DEEP AND EQUIVALENT TO CEMENT CONCRETE DRIVEWAY ENTRANCE TYPE 1.
6. MODIFIED SINGLE DIRECTION CURB RAMP IN ACCORDANCE WITH STANDARD PLAN F-40.16-02 AND DETECTABLE WARNING SURFACE IN ACCORDANCE WITH STANDARD PLAN F-45.10-01.
7. ALL DISTURBED AREAS ARE TO HAVE 6" TOPSOIL PER SPECIAL PROVISION 8-02.

Point Table

Point #	Northing	Easting
1	699795.64	1174402.49
2	699775.92	1174448.43
3	699794.61	1174455.84
4	699815.02	1174408.70
5	699787.72	1174452.86
6	699784.74	1174459.74
7	699800.80	1174466.69
8	699805.83	1174403.49

SITE PLAN

SCALE: 1"= 3'

REV	DATE	DES	CHECK	APPROVALS	REVISION DESCRIPTION

DATE: 07-07-14 | CIVIL REVIEW:
DESIGNED: | ARCH REVIEW:
DRAWN: | STRUC REVIEW:
CHECKED: | MECH REVIEW:
APPROVED:

TETRA TECH
www.tetratech.com
1420 Fifth Avenue, Suite 600
Seattle, Washington 98101
Phone: 206-883-9300 Fax: 206-883-9301

BRUCE R. GRAVELLE — STATE OF WASHINGTON — 23364 — REGISTERED PROFESSIONAL ENGINEER — 7-7-14

CITY OF FIFE
PS-10 REHABILITATION / PS-5 AND PS-6 WETWELL COATING
PS-10
SITE PLAN

FILE NO:
PROJECT NO: 135-12584-14002
DWG NO: C-103
SHEET: OF

This drawing is full size when 22"x 34" or is reduced to half size when 11"x17"

COPYRIGHT 2010, TETRA TECH, ALL RIGHTS RESERVED

Path: P:\12584\135-12584-14001\CAD\SheetFiles\C-103 SITE PLAN AND CIVIL DETAILS.dwg Plot date: Jul 07, 2014-04:46:01pm CAD User: bryan.thomas.
Xref Filename: I D-FP-VAULT-EX I C-XP-TOPO-CONTOURS I C-XP-TOPO I G-BS-2Ex34Hz I D-FP-WELL AND VAULT S-FP-WELL AND VAULT I C-SP-SITE I GS-BRG-WA I _BRG-SIG

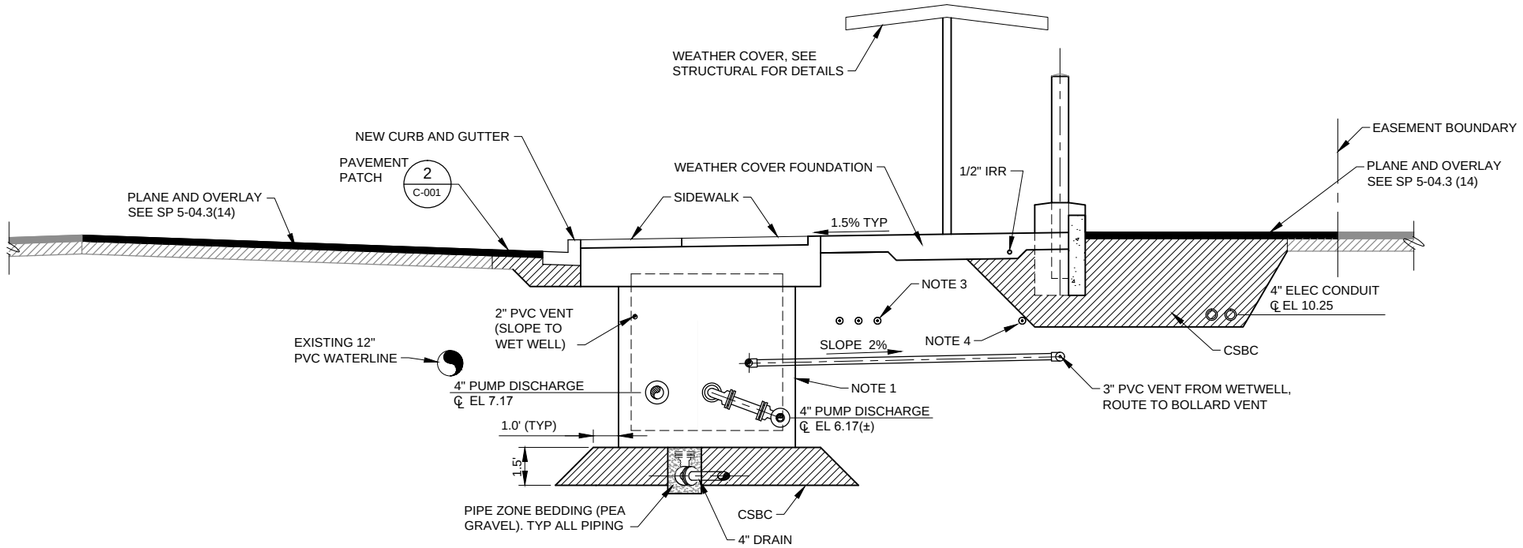

C C-103 SECTION
SCALE:1"=3'
M-101

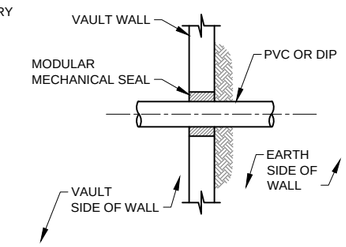

1 M-101 VAULT PIPE PENETRATION
SCALE:NTS

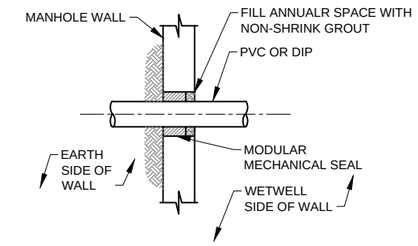

2 M-101 MANHOLE PIPE PENETRATION
SCALE:NTS

NOTES:

1. VAULT BASE AND WALL SECTION ARE TO BE MODEL 612-LA OLDCASTLE OR EQUAL. WALLS ARE TO BE SMOOTH WITH NO KNOCK OUT PANELS. EXTERIOR OF VAULT IS TO BE DAMPPROOFED PER SECTION 09900.
2. THE SST CHANNEL IS TO BE ANVIL FIG. AS 200 EH, OR APPROVED EQUAL. THE SST PIPE STRAP IS TO BE ANVIL FIG. 262, OR APPROVED EQUAL.
3. THE EXISTING CENTURY LINK TELEPHONE CONDUIT MAY BE POSITIONED AS SHOWN ON THE NORTH SIDE OF THE NEW VALVE VAULT (SEE SPECIAL PROVISION 1-09.6).
4. THE EXISTING CENTURY LINK FIBER OPTIC CONDUIT MAY BE SUFFICIENTLY DEEP TO NOT INTERFERE WITH CONSTRUCTION (SEE SPECIAL PROVISION 1-09.6).

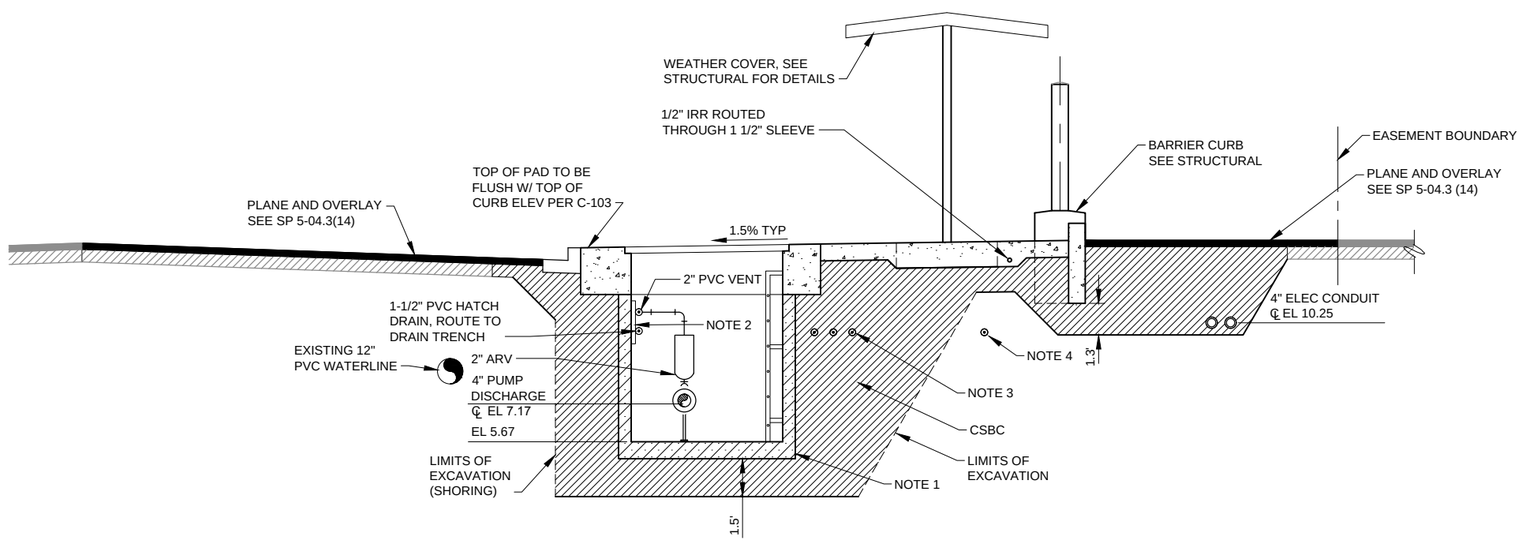

D C-103 SECTION
SCALE1"=3'
M-101

REV	DATE	DES	CHECK	APPROVALS	REVISION DESCRIPTION

DATE: 07-07-14	CIVIL REVIEW:
DESIGNED:	ARCH REVIEW:
DRAWN:	STRUC REVIEW:
CHECKED:	MECH REVIEW:
APPROVED:	

TETRA TECH
www.tetratech.com
1420 Fifth Avenue, Suite 600
Seattle, Washington 98101
Phone: 206-883-9300 Fax: 206-883-9301

BRUCE R. GRAVELLE, STATE OF WASHINGTON, 23364, REGISTERED PROFESSIONAL ENGINEER, 7-7-14

CITY OF FIFE
PS-10 REHABILITATION / PS-5 AND PS-6 WETWELL COATING
PS-10

SITE PLAN SECTIONS

FILE NO:	
PROJECT NO:	135-12584-14002
DWG NO:	C-104
SHEET:	OF

This drawing is full size when 22"x 34" or is reduced to half size when 11"x17"

COPYRIGHT 2010, TETRA TECH, ALL RIGHTS RESERVED

Path: P:\12584\135-12584-14001\CAD\SheetFiles\C-104 SITE PLAN SECTIONS.dwg Plot date: Jul 08, 2014-09:51:43am CAD User: jamie.carter.
Xref Filename: | G:BS-22x34hz | D-FP-VAULT-EX | D-FP-WELL AND VAULT | D-SC-VAULT-EX | D-SC-WELL AND VAULT | S-SC-WELL AND VAULT | S-FP-WELL AND VAULT | C-XP-TOPO | GS-BRG-WA | _BRG-SIG

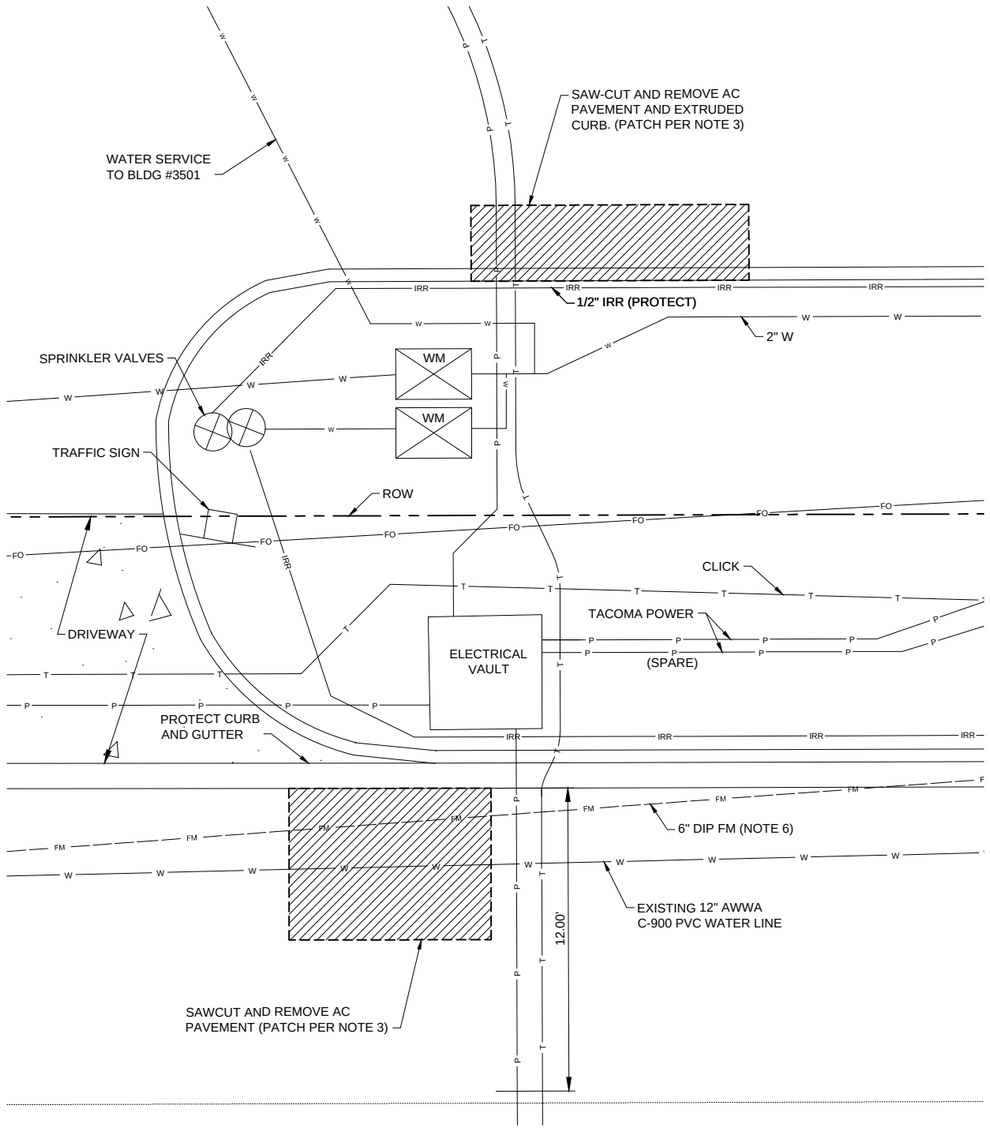

1 C-101 WEST WATER PLAN (EXISTING/ DEMOLITION)
SCALE: 1"=3'-0"

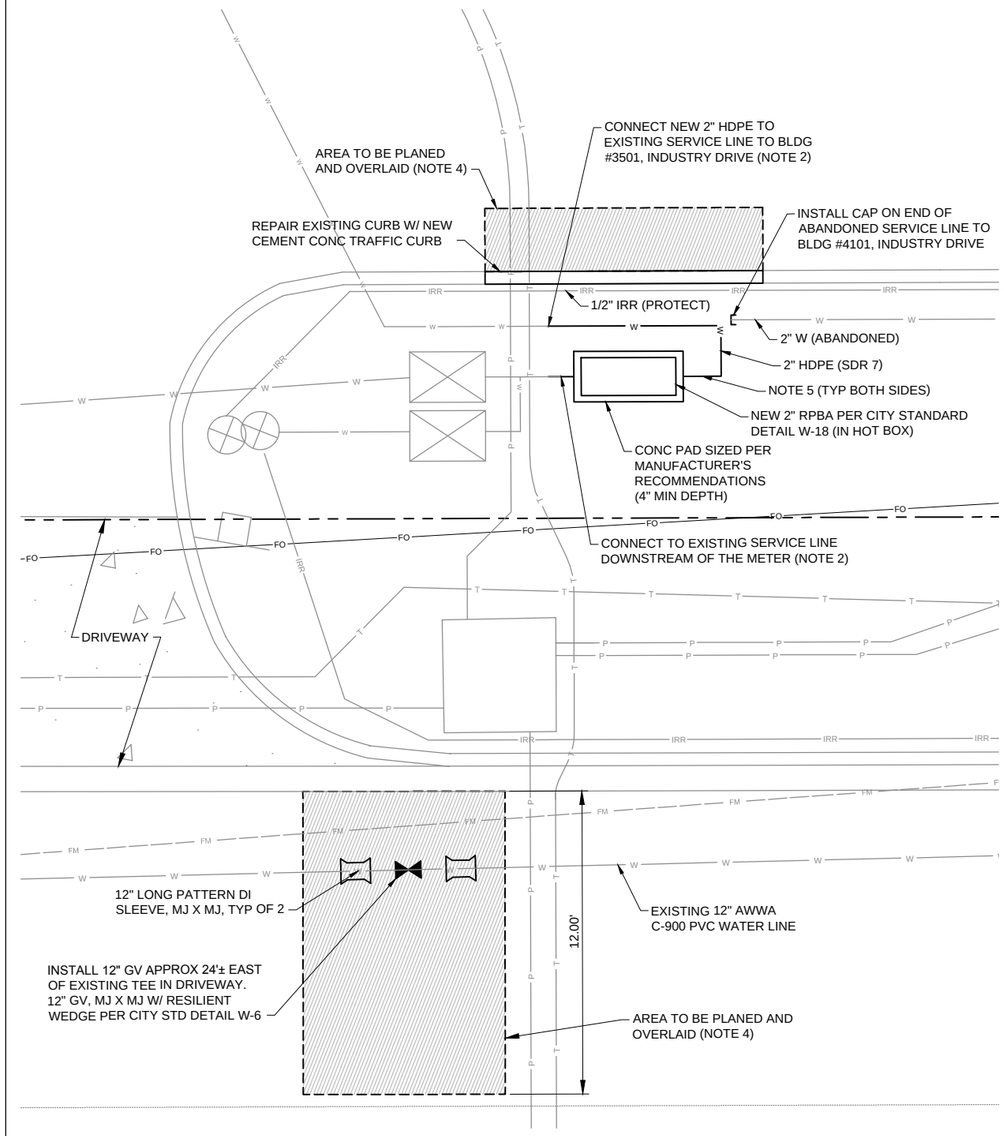

2 C-101 WEST WATER PLAN
SCALE: 1"=3'-0"

0 1.5' 3' 6'
SCALE: 1"= 3'

NOTES

1. THE EXISTING UTILITIES SHOWN ARE BASED ON UTILITY RECORD DRAWINGS AND FIELD MARKING BY ONE-CALL. IT IS THE CONTRACTOR'S RESPONSIBILITY TO LOCATE ALL BURIED UTILITIES PRIOR TO EXCAVATION WORK.
2. EXPOSE AND VERIFY PIPING CONFIGURATION TO DETERMINE REQUIRED MATERIALS.
3. PAVEMENT IS TO BE PATCHED IN ACCORDANCE WITH DETAIL 2, DWG C-001. DIMENSION OF THE AC PATCH AS REQUIRED FOR THE WORK.
4. PLANING BITUMINOUS PAVEMENT PER SPECIAL PROVISION 5-04.3(14).
5. PROVIDE 2" BRASS (OR COPPER) BASE ELBOWS, AND RISERS PER CITY STANDARD DETAIL W-18.
6. THE FORCEMAIN IS A PRESSURIZED MECHANICAL JOINT DIP (MAXIMUM PRESSURE 20 FT). BLOCK AND SUPPORT FORCEMAIN.

REV	DATE	DES	CHECK	APPROVALS	REVISION DESCRIPTION

DATE: 07-07-14
DESIGNED:
DRAWN:
CHECKED:
APPROVED:
CIVIL REVIEW:
ARCH REVIEW:
STRUC REVIEW:
MECH REVIEW:

TETRA TECH
www.tetratech.com
1420 Fifth Avenue, Suite 600
Seattle, Washington 98101
Phone: 206-883-9300 Fax: 206-883-9301

BRUCE R. GRAVELLE, STATE OF WASHINGTON, 23364, REGISTERED PROFESSIONAL ENGINEER, 7-7-14

CITY OF FIFE
PS-10 REHABILITATION / PS-5 AND PS-6 WETWELL COATING
PS-10

WATER SYSTEM IMPROVEMENTS (WEST)

FILE NO:
PROJECT NO: 135-12584-14002
DWG NO: C-105
SHEET: OF

This drawing is full size when 22"x 34" or is reduced to half size when 11"x17"

COPYRIGHT 2010, TETRA TECH, ALL RIGHTS RESERVED

Path: \\TWRS318FS1\Projects\12584\135-12584-1400\CAD\SheetFiles\C-105 WATER SYSTEM IMPROVEMENTS- WEST.dwg Plot date: Jul 07, 2014-0406:58pm CAD User: bryan.thongsy.
Xref Filename: | D-SC-VAULT-EX | D-FP-VAULT-EX | C-XP-TOPO-CONTOURS | C-XP-TOPO | G-BS-22x34hz | C-SP-SITE | GS-BRG-WA | _BRG-STG |

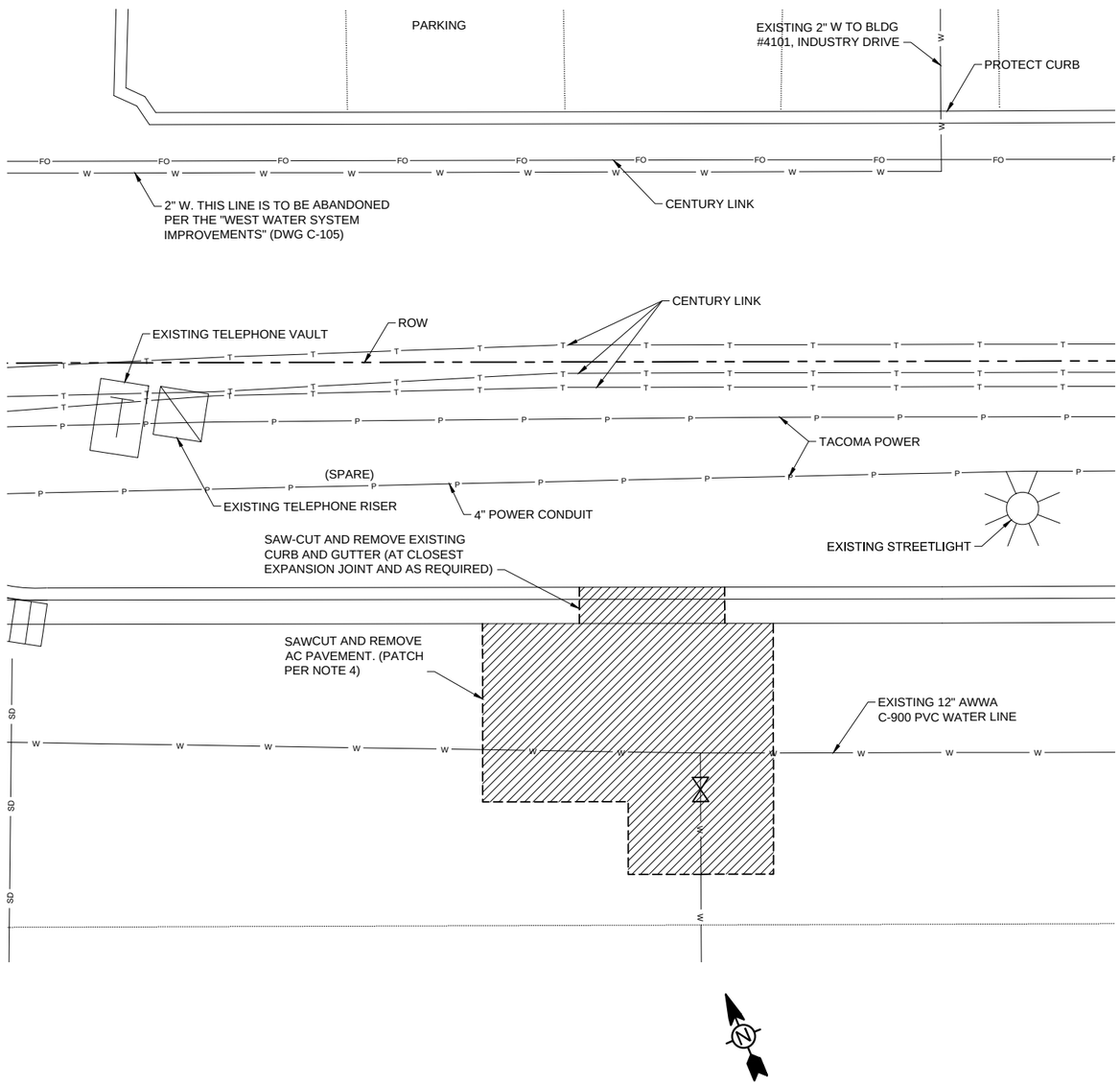

1 C-101 EAST WATER PLAN (EXISTING/ DEMOLITION)
SCALE: 1"=3'-0"

NOTES

1. THE EXISTING UTILITIES SHOWN ARE BASED ON UTILITY RECORD DRAWINGS AND FIELD MARKING BY ONE-CALL. IT IS THE CONTRACTOR'S RESPONSIBILITY TO LOCATE ALL BURIED UTILITIES PRIOR TO EXCAVATION WORK.
2. EXPOSE AND VERIFY PIPING CONFIGURATION TO DETERMINE REQUIRED MATERIALS.
3. THIS PIPELINE SERVES A FIRE PROTECTION SYSTEM FOR THE INDUSTRIAL FACILITIES ON THE SOUTH SIDE OF INDUSTRY DRIVE. THE WORK INDICATED TO ABANDON THIS CONNECTION CANNOT BE COMPLETED UNTIL OTHER MODIFICATIONS TO THIS FIRE PROTECTION SYSTEM ARE COMPLETED BY THE PROPERTY OWNER. THE CITY WILL COORDINATE WITH THE PROPERTY OWNER AND THE CONTRACTOR TO DETERMINE WHEN THIS CONNECTION CAN BE ABANDONED.
4. PAVEMENT IS TO BE PATCHED IN ACCORDANCE WITH DETAIL 2, DWG C-001. DIMENSION OF THE AC PATCH AS REQUIRED FOR THE WORK.
5. INSTALL SST SADDLE AND CORP STOP FOR SAMPLING STATION PER CITY STANDARD DETAIL W-7.
6. INSTALL SST SADDLE AND 2" R/W GATE VALVE W/ OPERATING NUT AND VALVE BOX PER CITY STD DETAIL W-3.

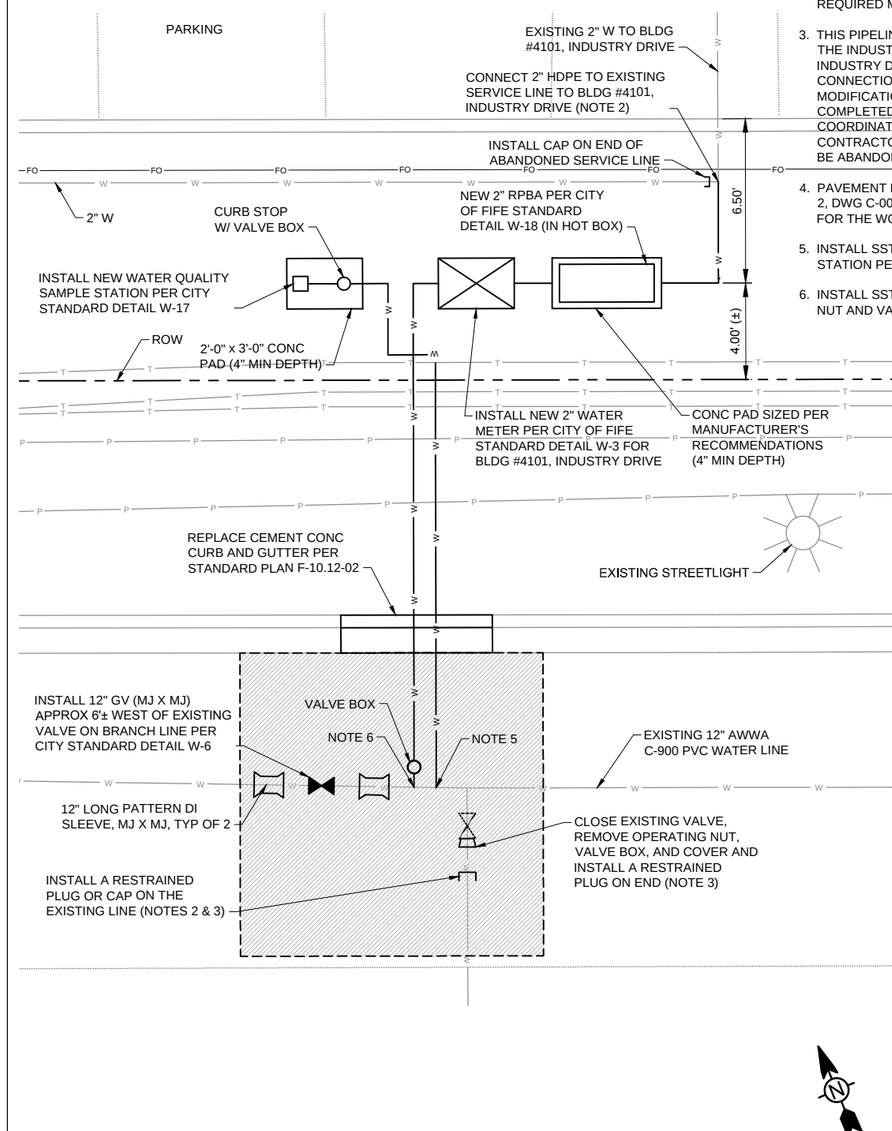

2 C-101 EAST WATER PLAN
SCALE: 1"=3'-0"

0 1.5' 3' 6'
SCALE: 1" = 3'

REV	DATE	DES	CHECK	APPROVALS	REVISION DESCRIPTION

DATE: 07-07-14	CIVIL REVIEW:
DESIGNED:	ARCH REVIEW:
DRAWN:	STRUC REVIEW:
CHECKED:	MECH REVIEW:
APPROVED:	

TETRA TECH
www.tetratech.com
1420 Fifth Avenue, Suite 600
Seattle, Washington 98101
Phone: 206-883-9300 Fax: 206-883-9301

BRUCE R. GRAVELLE, STATE OF WASHINGTON, 23364, REGISTERED PROFESSIONAL ENGINEER, 7-7-14

CITY OF FIFE
PS-10 REHABILITATION / PS-5 AND PS-6 WETWELL COATING
PS-10

WATER SYSTEM IMPROVEMENTS (EAST)

FILE NO:
PROJECT NO: 135-12584-14002
DWG NO: C-106
SHEET: OF

This drawing is full size when 22"x 34" or is reduced to half size when 11"x17"

COPYRIGHT 2010, TETRA TECH, ALL RIGHTS RESERVED

Path: \\WR538FS3\Projects\12584\135-12584-14001\CAD\Sheetfiles\C-106 WATER SYSTEM IMPROVEMENTS- EAST.dwg Plot date: Jul 07, 2014-04073Bpm CAD User: bryan.thompsy
Xref Filename: | D-SC-VAULT-EX | D-FP-VAULT-EX | C-XP-TDPD-CONTOURS | C-XP-TDPD | G-BS-22x34nz | C-SP-SITE | GS-BRG-WA | _BRG-SIG |

NOTES

1. WEATHER COVER SLAB SHALL BE MINIMUM 8" THICK. SLOPE TOP OF SLAB PER CIVIL. REINFORCE SLAB WITH #5@12 EACH WAY. REINFORCING SHALL BE SUPPORTED TO MAINTAIN POSITION AT 3" FROM BOTTOM OF SLAB.

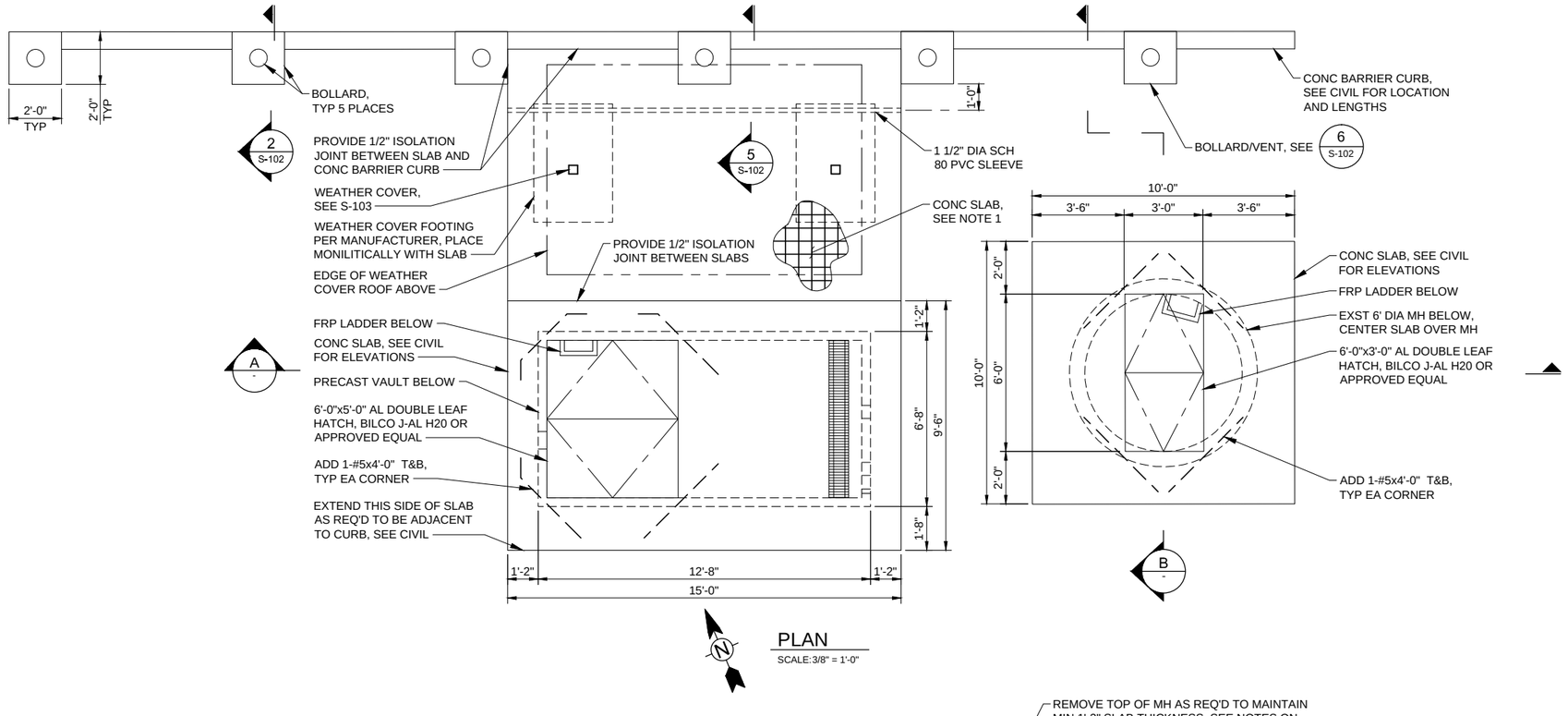

PLAN
SCALE:3/8" = 1'-0"

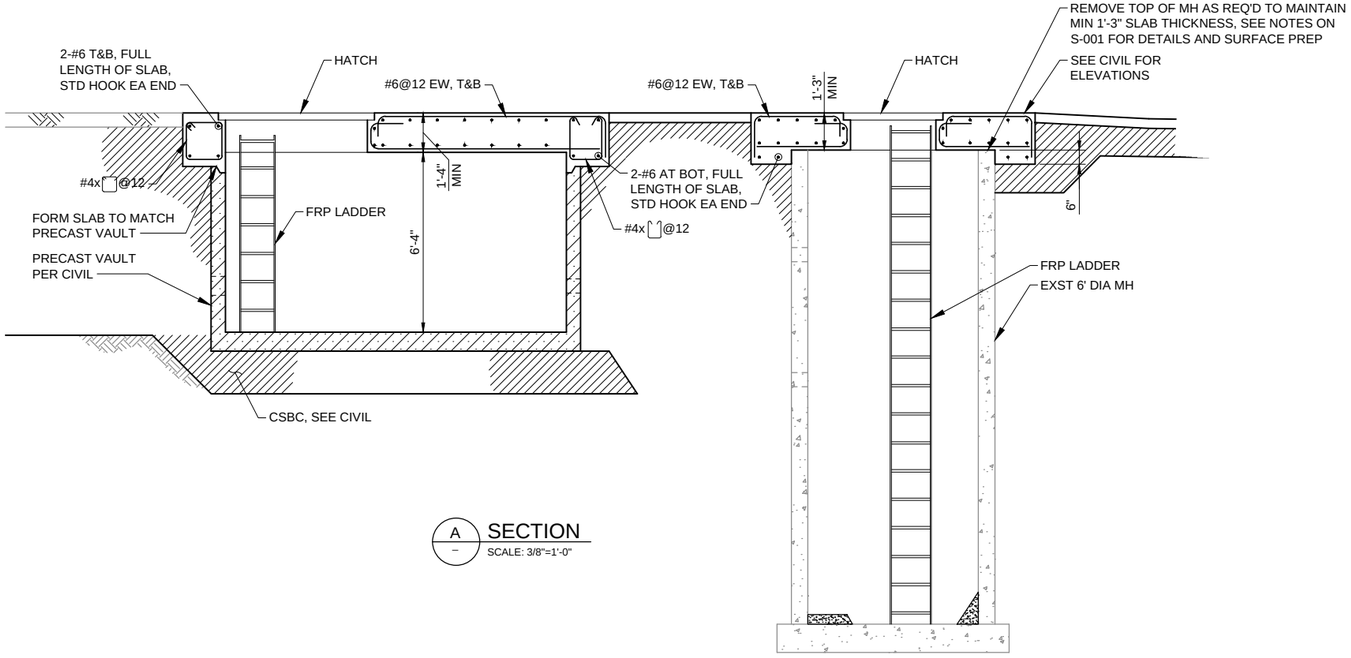

A SECTION
SCALE: 3/8"=1'-0"

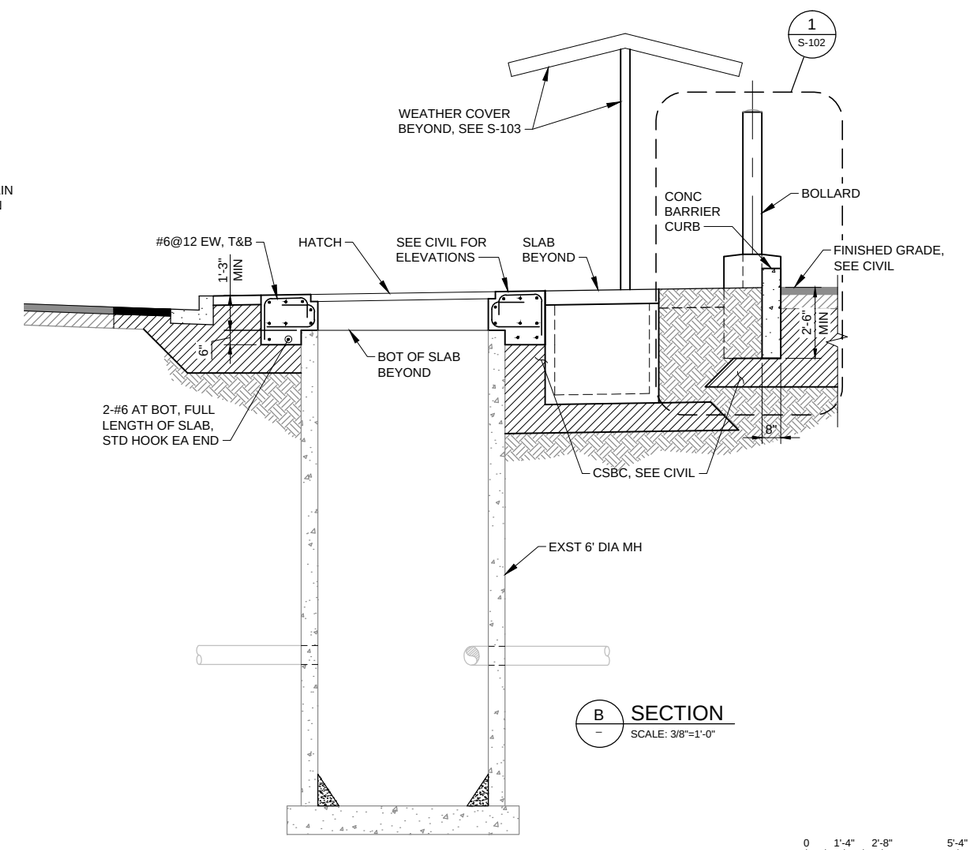

B SECTION
SCALE: 3/8"=1'-0"

0 1'-4" 2'-8" 5'-4"
SCALE: 3/8" = 1'-0"

REV	DATE	DES	CHECK	APPROVALS	REVISION DESCRIPTION

DATE: 07-07-14	CIVIL REVIEW:
DESIGNED:	ARCH REVIEW:
DRAWN:	STRUC REVIEW:
CHECKED:	MECH REVIEW:
APPROVED:	

TETRA TECH
www.tetratech.com
1420 Fifth Avenue, Suite 600
Seattle, Washington 98101
Phone: 206-883-9300 Fax: 206-883-9301

REZA NADERESFAHANI, STATE OF WASHINGTON, 42261, REGISTERED PROFESSIONAL ENGINEER

CITY OF FIFE
PS-10 REHABILITATION / PS-5 AND PS-6 WETWELL COATING
PS-10

STRUCTURAL PLAN AND SECTIONS

FILE NO:	
PROJECT NO:	135-12584-14002
DWG NO:	S-101
SHEET:	OF

This drawing is full size when 22"x 34" or is reduced to half size when 11"x17"

COPYRIGHT 2010, TETRA TECH, ALL RIGHTS RESERVED

Path: \\WRS318FS1\Projects\12584\135-12584-14001\CAD\SheetFiles\S-101 STRUCTURAL PLANS AND SECTIONS.dwg Plot date: Jul 07, 2014-04:56:11pm CAD User: bryan.thomas
Xref Filename: 1 G-BS-22x34hz 1 S-SC-WELL AND VAULT 1 S-FP-WELL AND VAULT 1 D-SC-VAULT-EX 1 GS-HRN-WA 1 _HRN-STG 1

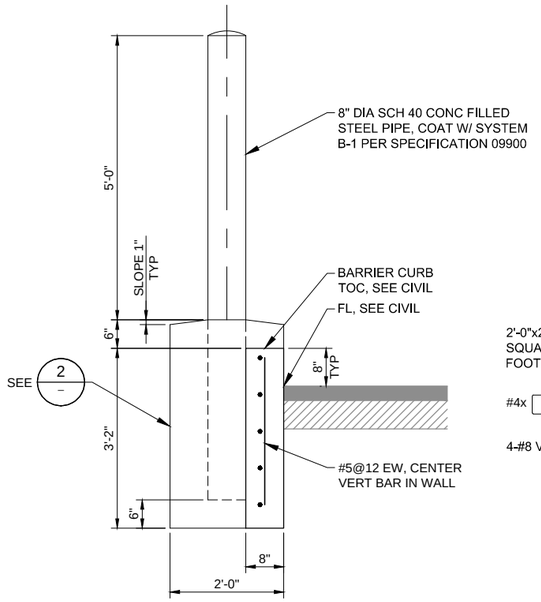

1 S-101 BARRIER CURB DETAIL
SCALE: 3/4" = 1'-0"

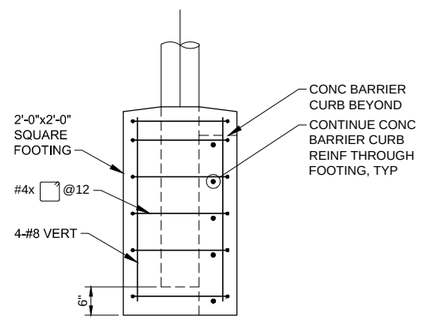

2 – DETAIL
SCALE: 3/4" = 1'-0"

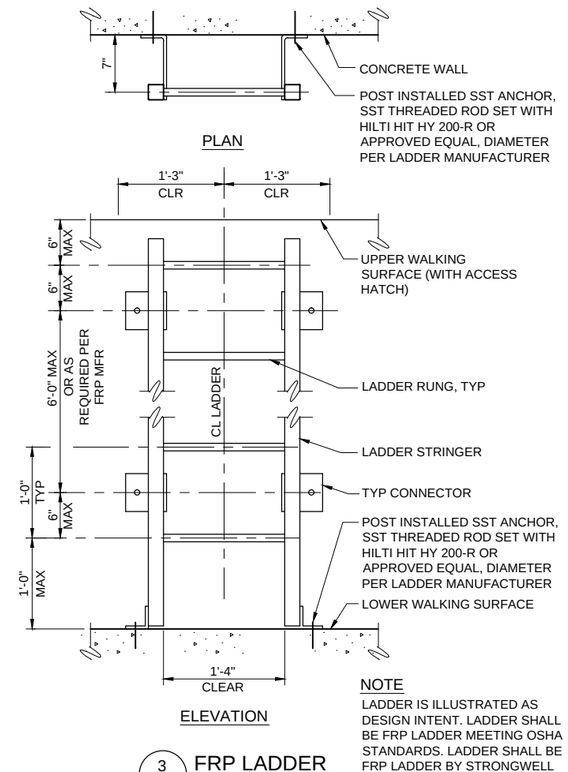

3 S-101 FRP LADDER
SCALE: NONE

NOTE

LADDER IS ILLUSTRATED AS DESIGN INTENT. LADDER SHALL BE FRP LADDER MEETING OSHA STANDARDS. LADDER SHALL BE FRP LADDER BY STRONGWELL OR APPROVED EQUAL.

TENSION DEVELOPMENT AND SPLICE LENGTHS							
BAR SIZE	Ld		CLASS B TENSION LAP		STD 90° HOOK		
	TOP BARS (NOTE 2)	OTHER BARS	TOP BARS (NOTE 2)	OTHER BARS	Ldh	HOOK LENGTH	BEND DIA
#3	18	14	23	19	7	5	3
#4	24	18	31	25	9	6	3
#5	30	23	38	31	12	8	4
#6	35	27	46	37	14	9	5
#7	51	40	67	54	16	11	6
#8	59	45	76	62	18	12	6
#9	66	51	86	70	21	14	10
#10	74	57	96	79	23	16	11
#11	82	64	107	87	26	17	12

NOTES

1. FOR GRADE 60 UNCOATED BARS AND NORMAL WEIGHT CONCRETE, f 'c = 4500 PSI.
2. "TOP BARS" ARE HORIZONTAL REINFORCING BARS WHERE 12" OF FRESH CONCRETE IS CAST BELOW THE DEVELOPMENT LENGTH OR SPLICE.

REINFORCING DEVELOPMENT AND LAP SPLICE LENGTHS

4 – DETAIL
SCALE: NONE

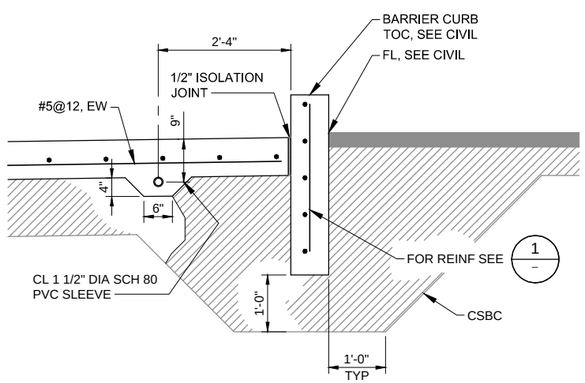

5 S-101 DETAIL
SCALE: 3/4" = 1'-0"

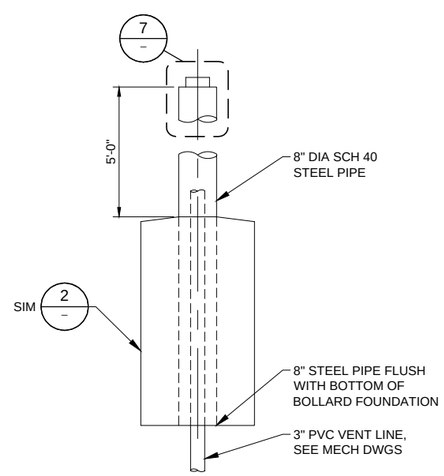

6 S-101 BOLLARD VENT DETAIL
SCALE: 3/4" = 1'-0"

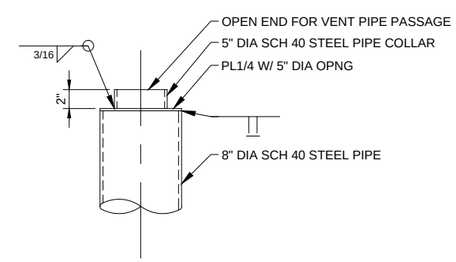

7 – DETAIL
SCALE: 1 1/2" = 1'-0"

0 8" 1'-4" 2'-8"
SCALE: 3/4" = 1'-0"

REV	DATE	DES	CHECK	APPROVALS	REVISION DESCRIPTION

This drawing is full size when 22"x 34" or is reduced to half size when 11"x17"

DATE: 07-07-14	CIVIL REVIEW:
DESIGNED:	ARCH REVIEW:
DRAWN:	STRUC REVIEW:
CHECKED:	MECH REVIEW:
APPROVED:	

TETRA TECH
www.tetratech.com
1420 Fifth Avenue, Suite 600
Seattle, Washington 98101
Phone: 206-883-9300 Fax: 206-883-9301

CITY OF FIFE
PS-10 REHABILITATION / PS-5 AND PS-6 WETWELL COATING
PS-10
STRUCTURAL SECTIONS AND DETAILS

FILE NO:
PROJECT NO: 135-12584-14002
DWG NO: S-102
SHEET: OF

COPYRIGHT 2010, TETRA TECH, ALL RIGHTS RESERVED

Path: \\WRS318FS1\Projects\12584\135-12584-14001\CAD\SheetFiles\S-102 STRUCTURAL DETAILS.dwg Plot date: Jul 07, 2014-04:56:24pm CAD User: bryan.thomas.
Xref Filename: 1 G-BS-22x34hz 1 S-SC-WELL AND VAULT 1 GS-HRN-VA 1 _HRN-SIG 1

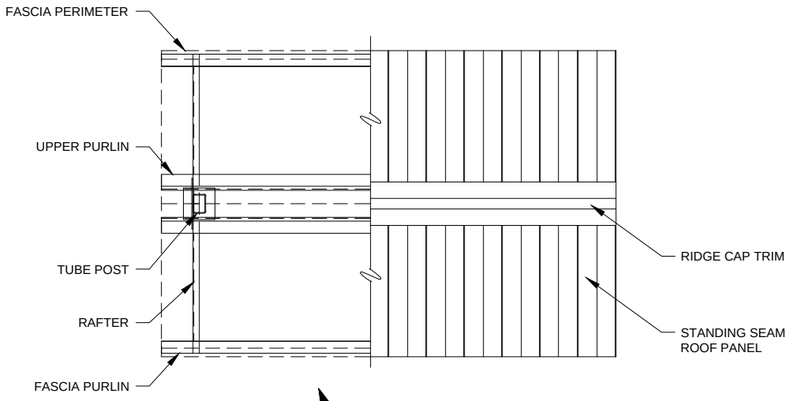

PLAN

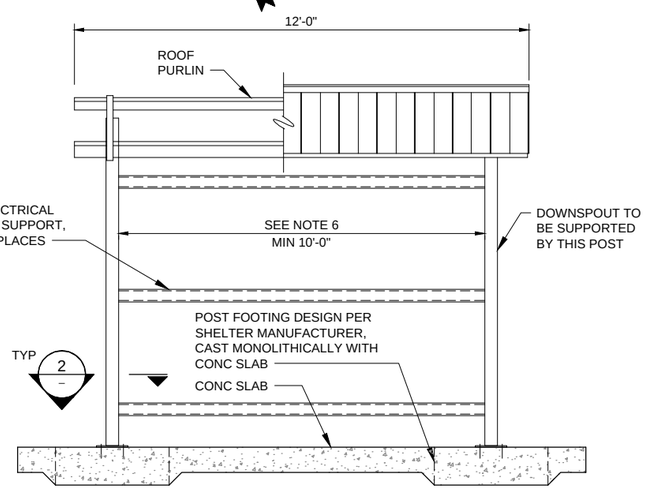

SOUTH ELEVATION

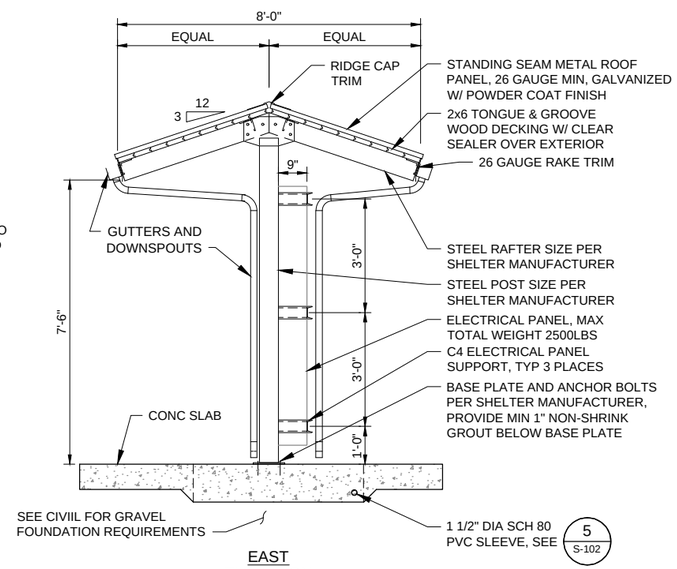

EAST ELEVATION

1 WEATHER COVER
SCALE: 1/2"=1'-0"

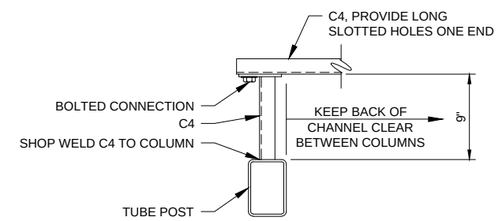

2 DETAIL
SCALE: 1 1/2"=1'-0"

WEATHER COVER NOTES

1. THE WEATHER COVER IS ILLUSTRATED AS DESIGN INTENT AND FOR ESTIMATING PURPOSES ONLY. THE WEATHER COVER SHALL BE NATURAL SHELTERS SENTINEL MOUNTAIN SERIES, OR APPROVED EQUAL.
2. THE WEATHER COVER AND FOUNDATIONS FOR THE WEATHER COVER SHALL BE ENGINEERED BY THE SHELTER MANUFACTURER. CONTRACTOR SHALL SUBMIT DESIGN AND SUBSTANTIATING STRUCTURAL CALCULATIONS THAT ARE STAMPED AND SIGNED BY A WASHINGTON STATE LICENSED ENGINEER, FOR APPROVAL BY THE PROJECT ENGINEER. REFER TO S-001 FOR DESIGN CRITERIA.
3. ALL METAL FABRICATIONS SHALL BE POWDER COATED GALVANIZED STEEL. PROVIDE COLOR CHART FOR SELECTION BY THE PROJECT ENGINEER.
4. POSTS, RAFTERS, PURLINS AND ALL CONNECTION ACCESSORIES SHALL BE HOT DIPPED GALVANIZED.
5. THE GUTTERS ARE TO BE MANUFACTURED FROM THE SAME MATERIAL AND HAVE THE SAME FINISH AS THE ROOFING. THE DOWNSPOUTS ARE TO MATCH THE GLAVANIZED POSTS IN COLOR.
6. VERIFY REQUIREMENT FOR CLEAR DIMENSION BETWEEN COLUMNS WITH ELECTRICAL PANEL LAYOUT PRIOR TO FABRICATION OF WEATHER COVER.

0 4" 8" 1'-4"
SCALE: 1 1/2" = 1'-0"

0 1' 2' 4'
SCALE: 1/2" = 1'-0"

REV	DATE	DES	CHECK	APPROVALS	REVISION DESCRIPTION

DATE: 07-07-14	CIVIL REVIEW:
DESIGNED:	ARCH REVIEW:
DRAWN:	STRUC REVIEW:
CHECKED:	MECH REVIEW:
APPROVED:	

TETRA TECH
www.tetratech.com
1420 Fifth Avenue, Suite 600
Seattle, Washington 98101
Phone: 206-883-9300 Fax: 206-883-9301

REZA NADERI ASLI, STATE OF WASHINGTON, 42561, REGISTERED PROFESSIONAL ENGINEER

CITY OF FIFE
PS-10 REHABILITATION / PS-5 AND PS-6 WETWELL COATING
PS-10

WEATHER COVER DETAILS

FILE NO:
PROJECT NO: 135-12584-14002
DWG NO: S-103
SHEET: OF

This drawing is full size when 22"x 34" or is reduced to half size when 11"x17"

COPYRIGHT 2010, TETRA TECH, ALL RIGHTS RESERVED

Path: P:\12584\135-12584-14001\CAD\SheetFiles\S-103 WEATHER COVER.dwg Plot date: Jul 07, 2014-04:56:35pm CAD User: bryan.thomas.
Xref Filename: | G-BS-2D-34hz | GS-HRN-WA | _HRN-STG |

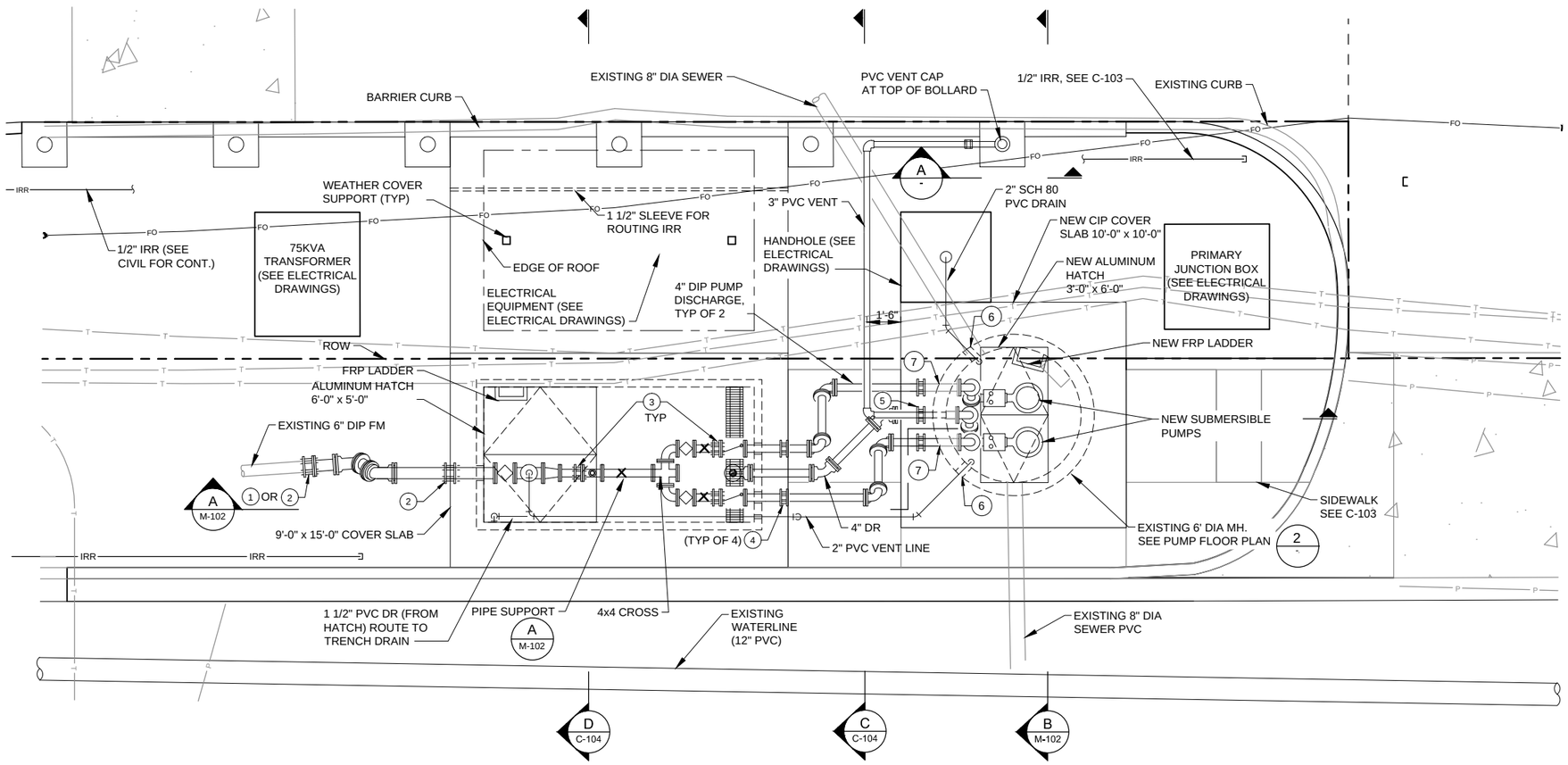

1 PLAN
SCALE:1"=3'

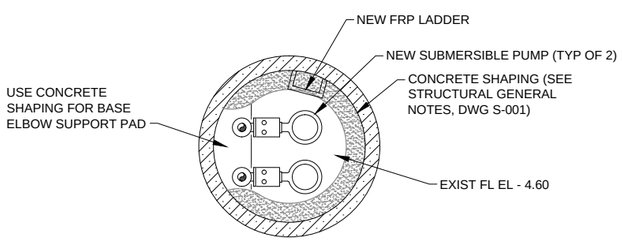

2 PUMP FLOOR PLAN
SCALE:1"=3'

NOTES

1. 6-INCH FCA, RESTRAINED
2. 6-INCH SLEEVE-TYPE COUPLING, RESTRAINED.
3. 4-INCH FCA, RESTRAINED.
4. 4-INCH SLEEVE-TYPE COUPLING, RESTRAINED.
5. 3-INCH DI COUPLING PER SPECIFICATION 9-30.2 (11) OF THE STANDARD SPECIFICATIONS
6. PIPE PENETRATION PER DETAIL 2, DWG C-104
7. RE-USE EXISTING WALL SPOOLS (VERIFY LOCATION)

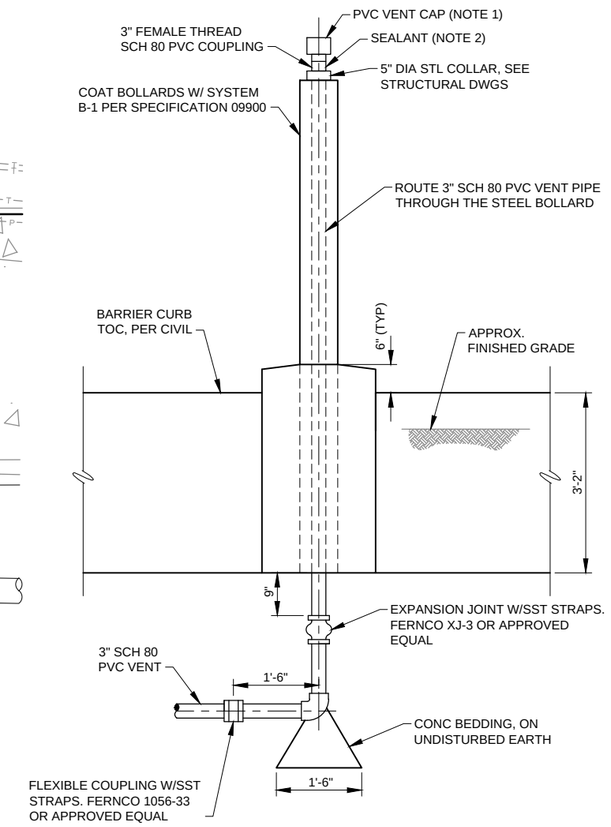

NOTES

1. PVC VENT CAP TO TO BE A MUSHROOM STYLE CAP, 3" MALE THREAD. GLOBAL INDUSTRIAL OR EQUAL. COAT WITH SYSTEM B-1 PER SPECIFICATION 09900.
2. SEAL THE GAP BETWEEN THE STEEL COLLAR AND THE PVC VENT LINE W/ BACKER ROD AND A WEATHER PROOF SEALANT.

A SECTION
SCALE:3/4"= 1'-0"

REV	DATE	DES	CHECK	APPROVALS	REVISION DESCRIPTION

DATE: 07-07-14	CIVIL REVIEW:
DESIGNED:	ARCH REVIEW:
DRAWN:	STRUC REVIEW:
CHECKED:	MECH REVIEW:
APPROVED:	

TETRA TECH
www.tetratech.com
1420 Fifth Avenue, Suite 600
Seattle, Washington 98101
Phone: 206-883-9300 Fax: 206-883-9301

BRUCE R. GRAVELLE, STATE OF WASHINGTON, 23364, REGISTERED PROFESSIONAL ENGINEER, 7-7-14

CITY OF FIFE
PS-10 REHABILITATION / PS-5 AND PS-6 WETWELL COATING
PS-10

MECHANICAL PLAN

FILE NO:
PROJECT NO: 135-12584-14002
DWG NO: M-101
SHEET: OF

This drawing is full size when 22"x 34" or is reduced to half size when 11"x17"

COPYRIGHT 2010, TETRA TECH, ALL RIGHTS RESERVED

Path: P:\12584\135-12584-14001\CAD\SheetFiles\M-101 MECHANICAL PROCESS PLAN.dwg Plot date Jul 08, 2014-09:55:32am CAD User: jamie.carter.
Xref Filename: I G-BS-2Ex34hz I D-FP-VAULT-EX I D-SC-VAULT-EX I D-SC-WELL AND VAULT I S-SC-WELL AND VAULT I S-FP-WELL AND VAULT I C-XP-DPD I C-SP-SITE I GS-BRG-WALL-BRG-SIG I

NOTES:

1. COAT DIP PIPE IN VAULT WITH HIGH BUILD EPOXY (SYSTEM A-2).
2. RE-USE EXISTING 4" WALL SPOOLS FOR DISCHARGE PIPING. THE LOCATION SHOWN FOR THE EXISTING WALL SPOOLS IS BASED ON MEASUREMENTS TAKEN WITH THE STATION IN SERVICE. CONTRACTOR IS TO FIELD-VERIFY LOCATION PRIOR TO SUBMITTING PUMP/ PIPE LAYOUT, PER SPECIFICATION 11324.
3. SST PIPE SUPPORT CLAMP ANVIL FIG 100, OR APPROVED EQUAL.
4. INSTALL DI CAP ON ABANDONED 4" DR, AND 4" BF ON OPPOSITE END
5. THE EXISTING FLOOR OF THE WETWELL MAY CONTAIN CONCRETE SHAPING FOR THE PREVIOUS PUMPING SYSTEM. IT IS THE CONTRACTOR'S RESPONSIBILITY TO REMOVE CONCRETE SHAPING THAT MAY INTERFERE WITH THE INSTALLATION OF THE NEW PUMPS, AND ADD NEW CONCRETE SHAPING AS INDICATED.
6. PIPE SUPPORT IS TO BE MATERIAL RESOURCES INC STANDON MODEL C92, GALVANIZED, OR APPROVED EQUAL. PROVIDE MINIMUM OF 1-INCH LEVELING GROUT BELOW BASE PLATE, TYP.
7. FLOOR DRAIN IS TO BE CAST IRON BODY W/ DUCTILE IRON STRAINER. JRS PRODUCTS 200 SERIES W/ 4" OUTLET (VALVE VAULT) OR 2" OUTLET (HANDHOLE).
8. ALL DISTURBED AREAS ARE TO HAVE 6" TOPSOIL PER SPECIAL PROVISION 8-02.
9. SST PIPE CLAMP ANVIL FIG 103, OR APPROVED EQUAL.
10. THE EXISTING CENTURY LINK TELEPHONE CONDUIT MAY BE ROUTED BETWEEN THE EXISTING WETWELL AND THE NEW HANDHOLE AS SHOWN (SEE SPECIAL PROVISION 1-09.6).
11. THE EXISTING CENTURY LINK FIBER OPTIC CONDUIT MAY BE ROUTED BELOW THE BARRIER CURB AS SHOWN (SEE SPECIAL PROVISION 1-09.6).

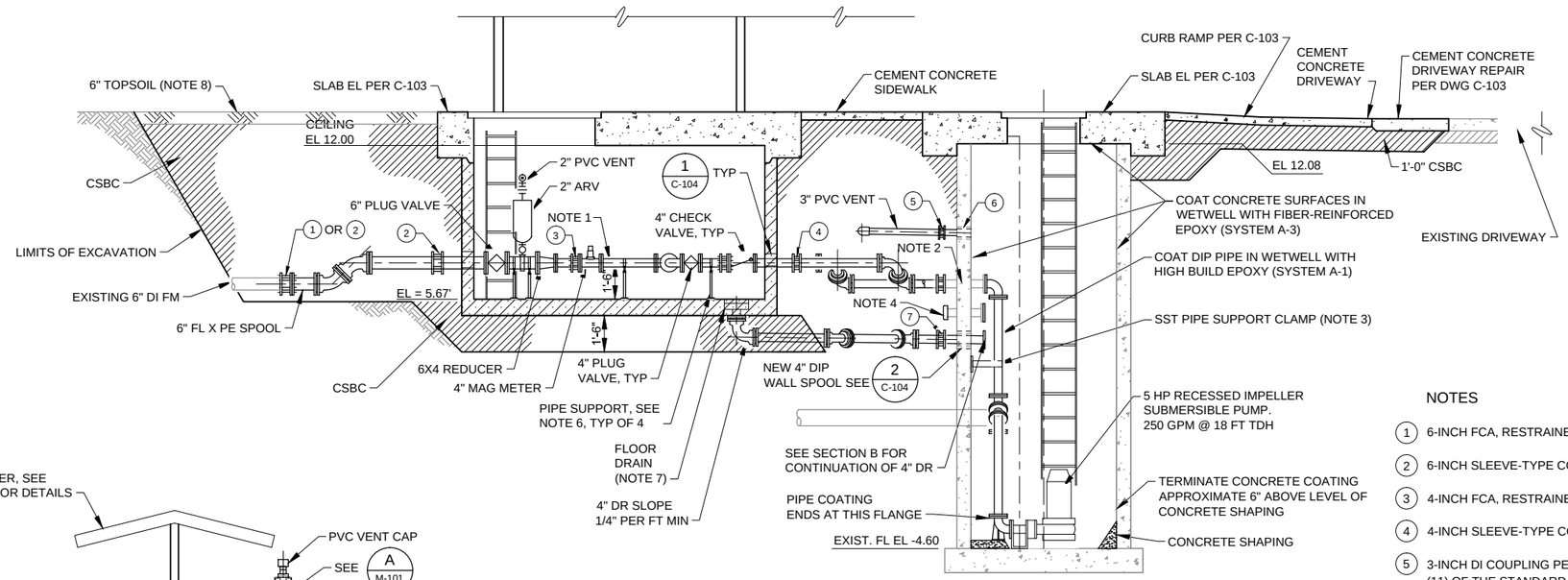

A M-101 SECTION
C-103 SCALE:1"=3'

NOTES

1. 6-INCH FCA, RESTRAINED
2. 6-INCH SLEEVE-TYPE COUPLING, RESTRAINED.
3. 4-INCH FCA, RESTRAINED.
4. 4-INCH SLEEVE-TYPE COUPLING, RESTRAINED.
5. 3-INCH DI COUPLING PER SPECIFICATION 9-30.2 (11) OF THE STANDARD SPECIFICATIONS
6. PIPE PENETRATION PER DETAIL 2, DWG C-104
7. 4-INCH DI COUPLING PER SPECIFICATION 9-30.2 (11) OF THE STANDARD SPECIFICATIONS

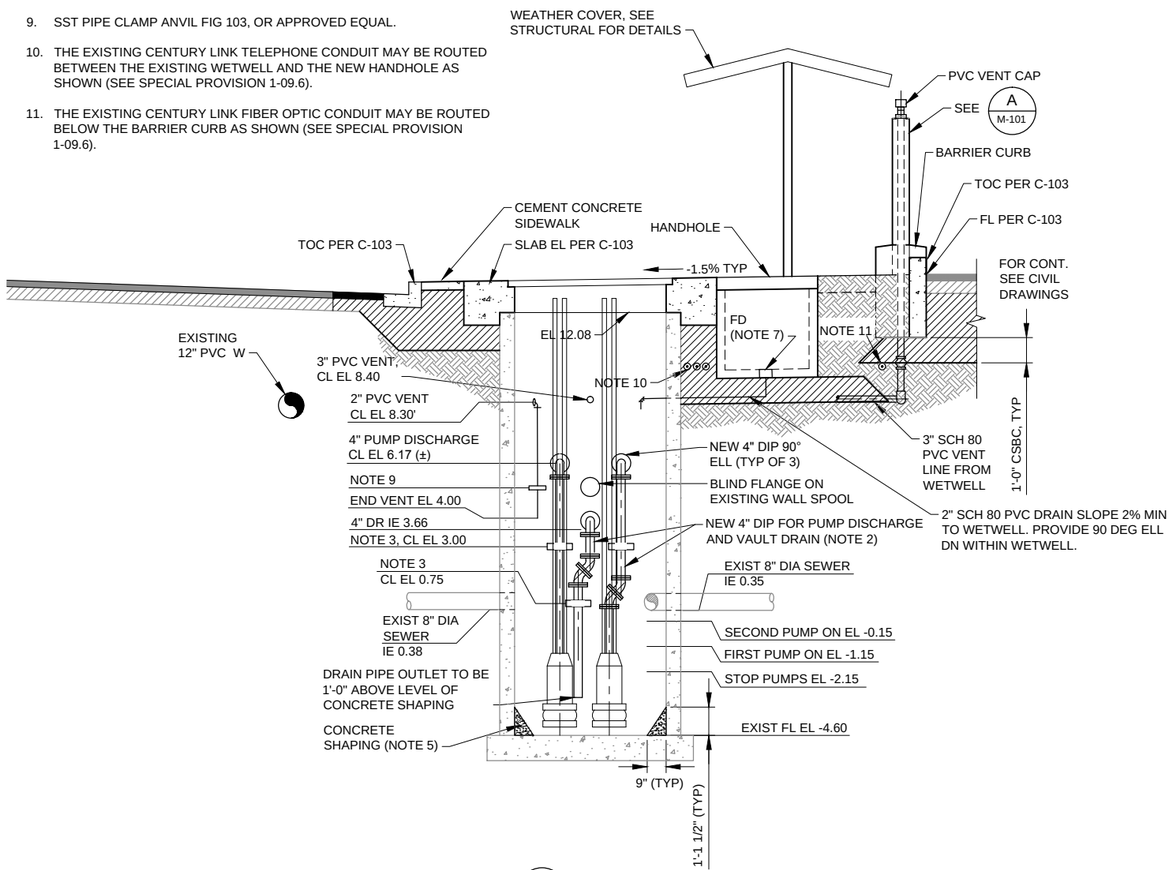

B M-101 SECTION
C-103 SCALE:1"=3'

PS-10 - COATING SCHEDULE			
CONCRETE SURFACES TO BE COATED	AREA(SF)	SYSTEM	COMMENTS
WETWELL			
CONCRETE WALLS	320	SEE COMMENTS	SYSTEM A-3a, FIBER REINFORCED EPOXY OR SYSTEM A-3b, ALTERNATIVE POLYURETHANE.
WETWELL CEILING	113		
TOTAL SYSTEM A-3	433		
VAULT DAMP PROOFING	250	C-1	SEE COATING SYSTEM REQUIREMENTS
METAL SURFACES TO BE COATED	AREA(SF)	SYSTEM	COMMENTS
WETWELL			
4" DIA PUMP DISCHARGE LINES	27	A-1 HIGH BUILD EPOXY	PIPE COATING AREA INCREASED BY 20% TO ACCOUNT FOR FLANGES AND MISCELLANEOUS PIPE SUPPORTS. SURFACE PREPARATION: SEE SPECIFICATION 09900.
4" DIA DRAIN LINE	11		
SUBTOTAL SYSTEM A-1	38		
VAULT			
4" DIA DISCHARGE LINES (DUCTILE IRON), WITH CHECK VALVES, PLUG VALVES, AND FITTINGS	15	A-2 HIGH BUILD EPOXY	
6" DIA DISCHARGE LINE (DUCTILE IRON) WITH FLOW METER, PLUG VALVES, AND FITTINGS	5		
AIR RELEASE VALVE	4		
PIPE STANDS & OTHER GALVANIZED SURFACES	5		
SUBTOTAL SYSTEM A-2	29		
BOLLARDS	53	B-1	SEE COATING SYSTEM REQUIREMENTS

REV	DATE	DES	CHECK	APPROVALS	REVISION DESCRIPTION

DATE: 07-07-14 | CIVIL REVIEW:
DESIGNED: | ARCH REVIEW:
DRAWN: | STRUC REVIEW:
CHECKED: | MECH REVIEW:
APPROVED:

This drawing is full size when 22"x 34" or is reduced to half size when 11"x17"

TETRA TECH
www.tetratech.com
1420 Fifth Avenue, Suite 600
Seattle, Washington 98101
Phone: 206-883-9300 Fax: 206-883-9301

BRUCE R. GRAVES, STATE OF WASHINGTON, 23364, REGISTERED PROFESSIONAL ENGINEER, 7-7-14

CITY OF FIFE
PS-10 REHABILITATION / PS-5 AND PS-6 WETWELL COATING
PS-10

MECHANICAL SECTIONS

FILE NO:
PROJECT NO: 135-12584-14002
DWG NO: M-102
SHEET: OF

COPYRIGHT 2010, TETRA TECH, ALL RIGHTS RESERVED

Path: P:\12584\135-12584-14001\CAD\Sheetfiles\M-102 MECHANICAL PROCESS SECTIONS.dwg Plot date: Jul 07, 2014-04:08:28pm CAD User: jamie.carter.
Xref Filename: G-BS-2Ex34hz | D-FP-VAULT-EX | D-FP-WELL AND VAULT | D-SC-VAULT-EX | D-SC-WELL AND VAULT | S-SC-WELL AND VAULT | S-FP-WELL AND VAULT | C-XP-TDPD | GS-BRG-WA | _BRG-STG

PLAN	ONE-LINE DIAGRAM	CONTROL DIAGRAM	DESCRIPTION
		ST	PUSHBUTTON, N.O. SHOWN, LETTERS INDICATE: A-AUTO, DN-DOWN, FWD-FORWARD, H-HAND, LOS-LOCK OUT STOP, O-OFF, REV-REVERSE, ST-START, SP-STOP, T-TEST
		AUTO OPEN CLOSE	SELECTOR SWITCH, "A" POSITION SHOWN. ARROW, WHEN USED, INDICATES SPRING RETURN, X'S AND O'S TO RIGHT OF CONTACTS, WHEN USED, INDICATE CONTACT DEVELOPMENT
			SPEED SWITCH, N.C. SHOWN. CONTACT CLOSES AT PRESET SPEED
			FLOAT SWITCH, N.C. SHOWN. CONTACT OPENS ON RISING LEVEL AT PRESET VALUE
			PRESSURE SWITCH, N.O. SHOWN. CONTACT CLOSES ON RISING PRESSURE AT PRESET VALUE
			TEMPERATURE SWITCH OR THERMOSTAT N.C. SHOWN. CONTACT OPENS ON RISING TEMPERATURE AT PRESET VALUE
			LIMIT SWITCH, N.O. SHOWN. CONTACT CLOSES WHEN DEFLECTED
			FLOW SWITCH, N.O. SHOWN. CONTACT CLOSES ON INCREASING FLOW AT PRESET VALUE
			TORQUE SWITCH, N.O. SHOWN. CONTACT CLOSES ON INCREASING TORQUE AT PRESET VALUE.
			RELAY AND DEVICE CONTACTS LETTERS & NUMBERS DESIGNATE DEVICE
		2 CR	CONTROL DEVICE, LETTER INDICATES: CR-CONTROL RELAY, TR-TIME DELAY RELAY, CC-CLOSING COIL, TM-TIMER, TC-TRIP COIL. NUMBER IDENTIFIES RELAY
			NORMALLY OPEN WHICH CLOSES ON COIL ENERGIZATION
			NORMALLY CLOSED WHICH OPENS ON COIL ENERGIZATION
	2	M	M-MAGNETIC MOTOR STARTER, C-GENERAL USE CONTACTOR (NUMBER INDICATED NEMA SIZE)
			SV-SOLENOID VALVE
			TIME DELAY CONTACTS LETTERS & NUMBERS DESIGNATE DEVICE
		1TR	NORMALLY OPEN WITH TIME DELAY CLOSING (ON DELAY)
		1TR	NORMALLY CLOSED WITH TIME DELAY OPENING (ON DELAY)
		1TR	NORMALLY OPEN WITH TIME DELAY OPENING (OFF DELAY)
		1TR	NORMALLY CLOSED WITH TIME DELAY CLOSING (OFF DELAY)
			CONTROL PANEL D.C. SIGNALS
			CONTROL PANEL A.C. SIGNALS
			MCC D.C. SIGNALS
			MCC A.C. SIGNALS
			DEVICE D.C. SIGNALS
			DEVICE A.C. SIGNALS
			FIELD WIRING
			ENCLOSURE WIRING
			ANTENNA
			CONDUIT SEAL OFF FITTING

PLAN	ONE-LINE DIAGRAM	CONTROL DIAGRAM	DESCRIPTION
M	25	25	MOTOR, NUMBER INSIDE CIRCLE INDICATES HORSEPOWER. MOTOR NUMBER SHOWN EXTERNAL
			GENERATOR
HTR	75KW	75KW	HEATER, NUMBER INDICATES KW
			MATING CONTACTS (DRAWOUT EQUIPMENT)
			MOTOR MAGNETIC STARTER
			THERMAL OVERLOAD HEATER
			DISCONNECT SWITCH (NON-FUSED)
X			DISCONNECT SWITCH (FUSED)
			COMBINATION MOTOR STARTER (NUMBER INDICATES NEMA STARTER SIZE)
			AUTOMATIC TRANSFER SWITCH
	G		BUS CONNECTION (N=NEUTRAL, G=GROUND)
			CARTRIDGE FUSE AND FUSEHOLDER
			CARTRIDGE FUSE AND FUSEHOLDER W/BLOWN (AC) FUSE INDICATOR
	200/3	200	CIRCUIT BREAKER: 200A CURRENT SENSOR OR TRIP SETTING, 3 POLE SHOWN
	ST		SHUNT TRIP CIRCUIT BREAKER
	GF		GROUND FAULT CIRCUIT BREAKER
	K		KEY INTERLOCK
		R	INDICATING LIGHT, LETTER INDICATES: R-RED, G-GREEN, A-AMBER, W-WHITE, B-BLUE
			REDUCED VOLTAGE SOLID STATE STARTER
			VARIABLE FREQUENCY DEVICE
T			TRANSFORMER
		400:5	CURRENT TRANSFORMER (NUMBERS INDICATE TRANSFORMER RATIO)
		480:120	POTENTIAL TRANSFORMER (NUMBERS INDICATE TRANSFORMER VOLTAGES)
		⊕12vdc⊖	BATTERY, NUMBER INDICATES POTENTIAL
			RECTIFIER OR DIODE
			GROUND CONNECTION
			CONDUCTORS NOT CONNECTED
			CONDUCTORS CONNECTED
			MECHANICAL CONNECTION, INTERLOCKS
			EQUIPMENT ENCLOSURE/ BOUNDARY
	RES	RES	RESISTOR
			POTENTIOMETER
			SPECIAL PURPOSE RECEPTACLE, AS NOTED
KWH DEM	KWH VS	KWH VS	METER OR SWITCH, LETTER INDICATES: F-FREQUENCY METER, A-AMMETER, H-HOURMETER, PF-POWER FACTOR, T-TACHOMETER, V-VOLTMETER, VR-VARMETER, W-WATTMETER, VS-VOLTMETER SWITCH, AS-AMMETER SWITCH, DEM-DEMAND METER, KWH-WATTHOUR METER, (CIRCLE USED WITH METERS, SQUARE USED WITH SWITCHES)
			COIL SURGE SUPPRESSER
			POWER FACTOR CORRECTION CAPACITOR
	12,345		AVAILABLE FAULT CURRENT

PLAN	DESCRIPTION
A	CONDUIT CALLOUT. IF USED, SEE CONDUIT SCHEDULE
D122DF	EQUIPMENT CALLOUT. SEE SCHEDULE
1	DETAIL NUMBER
E2	DETAIL IDENTIFIER
	REFERENCE DRAWING NUMBER
LE	INSTRUMENT TYPE PER ISA
101	INSTRUMENT IDENTIFIER
	INSTRUMENT NUMBER
	LIGHT LINE INDICATED EXISTING ELECTRICAL OR EXISTING EQUIPMENT. LIGHT LINE MAY ALSO BE USED FOR DETAIL DRAWING CLARITY.
	HEAVY LINE INDICATED NEW WORK
	EXISTING WORK TO BE REMOVED
	GROUND ROD AND WELL
	ARROW WITH ANY FIXTURE DENOTES ORIENTATION OF REFLECTOR OR DIRECTION OF MOUNTING
8'–6" A	LIGHTING FIXTURE IDENTIFIER. "A"-LIGHTING FIXTURE TYPE. SEE LIGHTING FIXTURE SCHEDULE. 8'6 MOUNTING HEIGHT TO BOTTOM OF FIXTURE. SURFACE MOUNTED IF NOT SPECIFIED.
$D	DIMMING SWITCH, LETTER REFERS TO CONTROLLED FIXTURES, 3-3 WAY
$	TOGGLE SWITCH, LETTER REFERS TO CONTROLLED FIXTURES, 3-3 WAY
$M	MOTOR RATED SWITCH WITH OVERLOAD PROTECTION
	LIGHTING FIXTURE, PENDANT MOUNT
	LIGHTING FIXTURE, EMERGENCY DUAL HEAD WITH INTEGRAL BATTERY PACK.
J	LIGHTING FIXTURE, EMERGENCY DUAL HEAD REMOTE MOUNTED FROM BATTERY PACK
	LIGHTING FIXTURE, POLE MOUNT
PC	PHOTOELECTRIC CONTROL UNIT. WALL MOUNTED
	LIGHTING FIXTURE, FLUORESCENT
	LIGHTING FIXTURE, WALL MOUNT
	EXIT SIGN, ARROWS AND MOUNTING AS INDICATED
PC	PHOTO CONTROL
	DUPLEX RECEPTACLE, GROUNDING TYPE
	FLOOR RECEPTACLE
	CEILING RECEPTACLE
	SURFACE MOUNTED RECEPTACLES
	EQUIPMENT CONNECTION
TC	TELEPHONE CABINET
	CIRCUIT BREAKER PANELBOARD 208Y/120V OR 120/240V
	480Y/277V
	CONDUIT, CONCEALED IN FINISHED AREAS, EXPOSED IN UNFINISHED AREAS
	CONDUIT BELOW GRADE
	DUCT BANK CONCRETE ENCASED
	DUCT BANK, CONCRETE ENCASED, STEEL REINFORCED
	CONDUIT BENT UP OR TOWARD
	CONDUIT BENT DOWN OR AWAY
G	GROUND WIRE WITH CADWELD CONNECTION PIGTAILED 18" ABOVE FINISHED FLOOR
G	GROUND WIRE WITH CADWELD CONNECTION
J	JUNCTION BOX
HH	MH-MANHOLE, HH-HANDHOLE, OR PB-PULL BOX (NUMBER IDENTIFIES MANHOLE, HANDHOLE, OR PULL BOX)
T	THERMOSTAT (T-STAT)
TB	TERMINAL BOX, SIZE AS REQUIRED.
	FLEXIBLE CORD OR CABLE
	FLEXIBLE METALLIC CONDUIT
#	FLAG NOTE

ABBREVIATION	WORD
A, AMP	AMPERE
AFF	ABOVE FINISHED FLOOR
AHJ	AUTHORITY HAVING JURISDICTION
AIC	AMPS INTERRUPTING CAPACITY
AIL	AMBER INDICATING LIGHT
AIT	ANALYZER INDICATOR TRASMITTER
ATS	AUTOMATIC TRANSFER SWITCH
AUTO	AUTOMATIC
AUX	AUXILIARY
AWG	AMERICAN WIRE GAUGE
BLDG	BUILDING
C	CONDUIT
CB	CIRCUIT BREAKER
CKT	CIRCUIT
CL, CL2	CHLORINE
CNTL	CONTROL
CO	CONDUIT ONLY
CP	CONTROL PANLEL
CR	CONTROL RELAY
CT	CURRENT TRANSFORMER
CU	COPPER
CV	CHECK VALVE, CONTROL VALVE
(E)	EXISTING
EQUIP	EQUIPMENT
ETM	ELAPSED TIME METER
EP	EXPLOSION PROOF
(F)	FUTURE
FE	FLOW SENSING ELEMENT
FS, FSL, FSH	FLOW SWITCH, LOW, HIGH
FT, FIT	FLOW TRANSMITTER, INDICATOR TRANSMITTER
GEN	GENERATOR
GIL	GREEN INDICATING LIGHT
G, GND	GROUND
GRS	GALVANIZED RIGID STEEL
HH	HANDHOLE
HOA, HOR	HAND-OFF-AUTO, HAND OFF REMOTE
HTR	HEATER
HZ	HERTZ (CYCLES PER SECOND)
I	INTRUSION, CURRENT, INDICATOR, ILLUMINATED
I/O	INPUT/OUTPUT
IPB	ILLUMINATED PUSH BUTTON
ISR, ISB	INTRINSIC SAFETY RELAY, INTRINSIC SAFETY BARRIER
IT	CURRENT TRANSMITTER
J	JUNCTION BOX
KAIC	THOUSAND AMPS INTERRUPTING CAPACITY
KWH	KILO WATT HOURS
KVA	KILO VOLT AMERS
LE	LEVEL SENSING ELEMENT
LS, LSH, LSL, LSHH, LSLL	LEVEL SWITCH, HIGH, LOW, HIGH HIGH, LOW LOW
LT, LIT	LEVEL TRANSMITTER, INDICATOR TRANSMITTER
LCP	LOCAL CONTROL PANEL
LOR	LOCAL OFF REMOTE
MD	MOTION DETECTOR
MD/PC	COMBINATION MOTION DETECTOR PHOTO CONTROL LIGHTING CONTROLLER
mA	MILLIAMPERES
MAN	MANUAL
MCC	MOTOR CONTROL CENTER
MH	MAN HOLE
MTR,M	MOTOR
MTS	MANUAL TRANSFER SWITCH
N.C.	NORMALLY CLOSED
N.O.	NORMALLY OPEN
NTS	NOT TO SCALE
OCA	OPEN CLOSE AUTO
OL	OVERLOAD
P	PUMP
PB	PUSH BUTTON
PC	PHOTOELECTRIC CONTROL UNIT
PH	PH ANALYZER
PH. Ø	PHASE
PNL	PANEL
PSI	POUNDS PER SQUARE INCH
PT, PIT	PRESSURE TRANSMITTER, INDICATOR TRANSMITTER
PS, PSH, PSL, PSHH, PSLL	PRESSURE SWITCH, HIGH, LOW, HIGH HIGH, LOW LOW
PVC	POLYVINYL CHLORIDE
REF	REFERENCE
REC	RECEPTACLE
RIL	RED INDICATING LIGHT
RTD	RESISTANCE TEMPERATURE DETECTOR
S&B	STEAD AND BAGERLY
S&L	SMITH AND LOVELESS
S, SEC	SECOND
SD	SMOKE DETECTOR
SEL	SELECTOR
SPD	SURGE PROTECTION DEVICE
SPEC	SPECIFICATION
S.S.	STAINLESS STEEL
SV	SOLENOID VALVE
SW	SWITCH
TB	TERMINAL BOX, TERMINAL BLOCK
TP	TACOMA POWER
TS	TEMPERATURE SWITCH
TSP	TWISTED SHIELDED PAIR
TT,TIT	TEMPERATURE TRANSMITTER, INDICATOR TRANSMITTER
TYP	TYPICAL
UPS	UNINTERRUPTIBLE POWER SUPPLY
V	VOLTS
Vac or VAC	VOLTS ALTERNATING CURRENT
Vdc or VDC	VOLTS DIRECT CURRENT
VFD	VARIABLE FREQUENCY DRIVE
W	WIRE
W/	WITH
W/O	WITHOUT
WIL	WHITE INDICATING LIGHT
WP	WEATHER PROOF (NEMA 4)
WT,WIT	WEIGHT TRANSMITTER, INDICATOR TRANSMITTER
XFMR	TRANSFORMER
ZS, ZSI, ZSV	POSITION SWITCH, INTRUSION, VALVE
ZSI	INTRUSION SENSING POSITION SWITCH

REV	DATE	DES	CHECK	APPROVALS	REVISION DESCRIPTION

DATE: 07–07–14
DESIGNED:
DRAWN:
CHECKED:
APPROVED:
CIVIL REVIEW:
ARCH REVIEW:
STRUC REVIEW:
MECH REVIEW:

TETRA TECH
www.tetratech.com
1420 Fifth Avenue, Suite 600
Seattle, Washington 98101
Phone: 206-883-9300 Fax: 206-883-9301

RANDY FRIECHS — STATE OF WASHINGTON — 39949 — REGISTERED PROFESSIONAL ENGINEER

CITY OF FIFE
PS-10 REHABILITATION / PS-5 AND PS-6 WETWELL COATING
PS-10

ELECTRICAL SYMBOLS, ABBREVIATIONS, AND LEGENDS

FILE NO:
PROJECT NO: 135–12584–14002
DWG NO: E-101
SHEET: OF

This drawing is full size when 22"x 34" or is reduced to half size when 11"x17"

COPYRIGHT 2010, TETRA TECH, ALL RIGHTS RESERVED

Path: \\WRS318FS1\Projects\12584\135-12584-14001\CAD\Sheetfiles\E-101 ELECTRICAL SYMBOLS ABBREVIATIONS AND LEGENDS.dwg Plot date: Jul 07, 2014-03:20:14pm CAD User: bryan.thomas
Xref Filename: I G-BS-22x34hz I GS-RF-WA I _RF-STG I

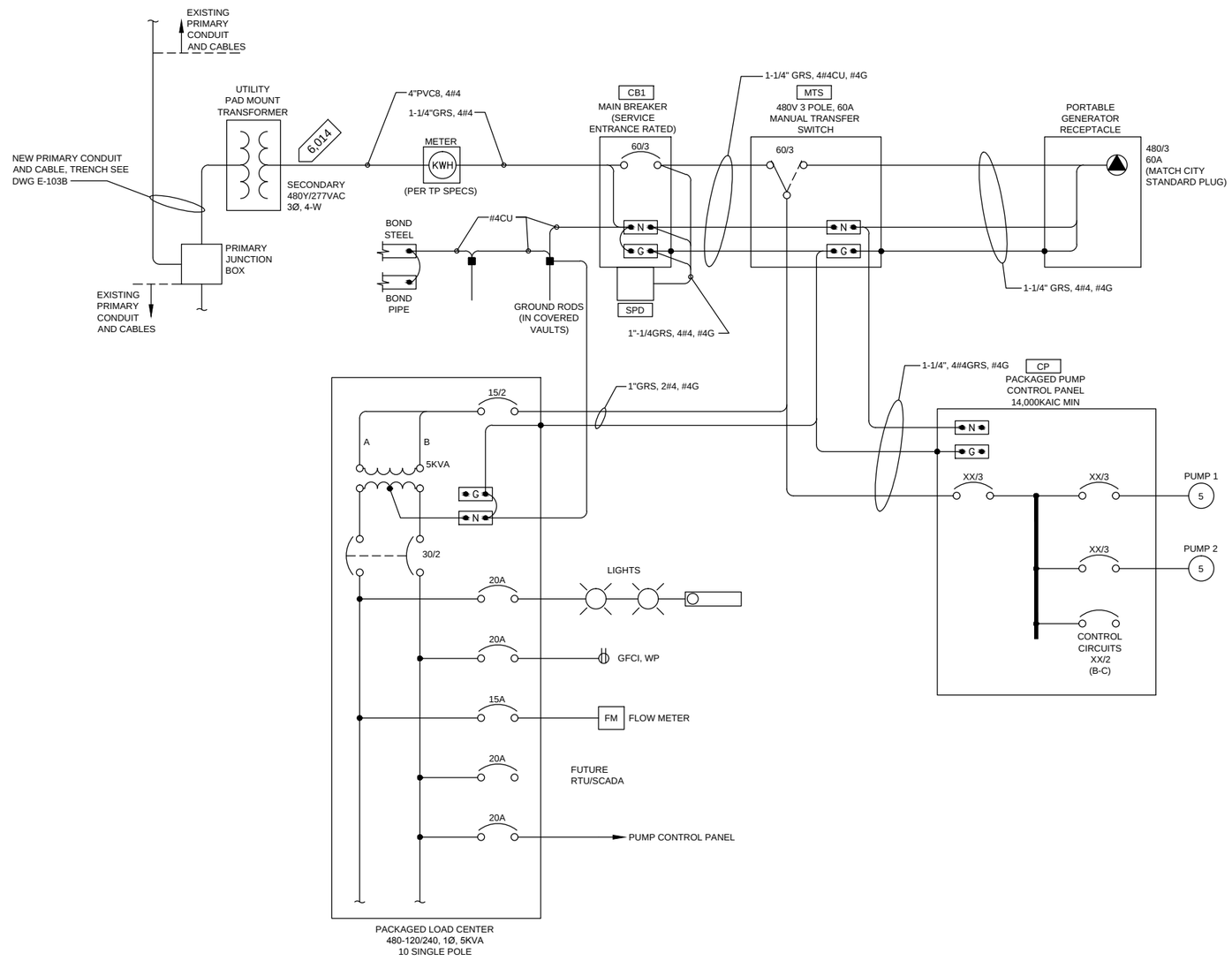

NOTES:

1. METERING EQUIPMENT SHALL COMPLY WITH SERVING UTILITY REQUIREMENTS. SEE SECTION 16000-1.08 AND SHEET E-103.
2. PRIMARY AND SECONDARY ELECTRICAL SERVICE WORK SHALL BE PER SPECIFICATION SECTION 16000-1.08, SHEET E-103, SHEET E103A, SHEET E-103B, AND THE LETTER OF AGREEMENT BETWEEN TACOMA POWER AND THE CITY AS REFERENCED IN SECTION 16000-1.08.
3. COORDINATE GENERATOR RECEPTACLE WITH CITY STANDARD GENERATOR PLUG.
4. MOUNT NEMA 4X SPD UNDER CB1.
5. ELECTRICAL DEMOLITION WORK PER DRAWING SHEET E-104 AND SPECIFICATION SECTION 16000-1.08.
6. PUMP CONTROL PANEL SHALL BE PER SPECIFICATION SECTION 11324-2.03.

480 VAC 3 PHASE LOAD	AMPS	KVA	DEMAND FACTOR	DEMAND AMPS	DEMAND KVA
5 HP PUMP 1	7.6	6.316	1.25	9.5	7.89
5 HP PUMP 2	7.6	6.316	1	7.6	6.32
120 VOLT LOAD	6.63	3.180	1	6.6	3.18
TOTAL		15.81		23.7	17.4
120 VAC 1 PHASE LOAD					
PUMP CONTROL PANEL	10				
SHELTER LIGHT	1				
WET WELL LIGHT	1				
VAULT LIGHT	1				
SCADA PANEL (FUTURE)	10				
BUBBLER	2				
20A RECEPTACLE	1.5				
AMPS	26.5				
KVA	3.18				

REV	DATE	DES	CHECK	APPROVALS	REVISION DESCRIPTION

DATE: 07-07-14
DESIGNED:
DRAWN:
CHECKED:
APPROVED:
CIVIL REVIEW:
ARCH REVIEW:
STRUC REVIEW:
MECH REVIEW:

This drawing is full size when 22"x 34" or is reduced to half size when 11"x17"

TETRA TECH
www.tetratech.com
1420 Fifth Avenue, Suite 600
Seattle, Washington 98101
Phone: 206-883-9300 Fax: 206-883-9301

RANDY FRITCHER STATE OF WASHINGTON 39949 REGISTERED PROFESSIONAL ENGINEER

CITY OF FIFE
PS-10 REHABILITATION / PS-5 AND PS-6 WETWELL COATING
PS-10

ONE-LINE DIAGRAM AND LOAD CALCULATION

FILE NO:
PROJECT NO: 135-12584-14002
DWG NO: E-102
SHEET: OF

COPYRIGHT 2010, TETRA TECH, ALL RIGHTS RESERVED

Path: \\WRS318FS1\Projects\12584\135-12584-14001\CAD\SheetFiles\E-102 ONE-LINE DIAGRAM LOAD CALCULATION AND TABLES.dwg Plot date: Jul 07, 2014-03:20:30pm CAD User: bryan.thomsy
XrefFilename: I G-BS-22x34hz I GS-RF-WA I _RF-SIG I

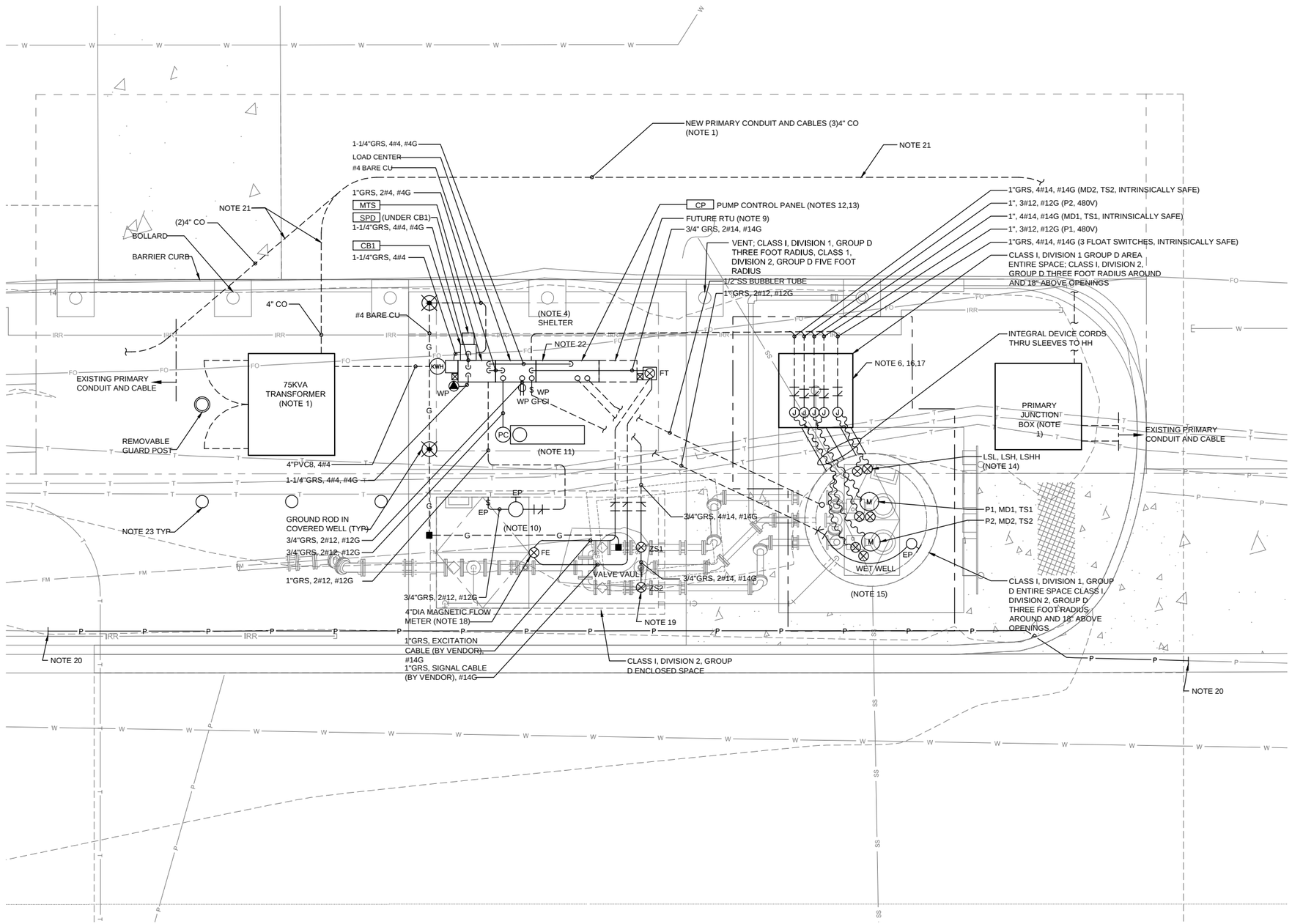

ELECTRICAL SITE PLAN

SCALE:1"=3'

NOTES:

1. ELECTRICAL SERVICE PER SPECIFICATION SECTION 16000, SHEET E-102, AND TACOMA POWER REVISION SHEETS E-103A AND E-103B. ELECTRICAL DEMOLITION WORK PER SHEET E-104. OTHER REQUIREMENTS, INCLUDING COMMUNICATION WITH TACOMA POWER AND SCHEDULING TACOMA POWER INSPECTIONS OF THE WORK, ARE DISCUSSED IN THE SPECIAL PROVISIONS, DIV 10.
2. ELECTRICAL SERVICE EQUIPMENT SHALL COMPLY WITH SERVING UTILITY (TACOMA PUBLIC UTILITIES/ TACOMA POWER) REQUIREMENTS. THE CONTRACTOR SHALL ANTICIPATE METER BASE REQUIREMENTS INCLUDING BUT NOT NECESSARILY LIMITED TO 3 PHASE, 4 WIRE, 480VAC WYE, 200 AMPS, 7 JAW SOCKET, WITH MANUAL METER BYPASS AND SAFETY SOCKET. THE CONTRACTOR SHALL COORDINATE AND CONFIRM SPECIFIC REQUIREMENTS WITH THE SERVING UTILITY.
3. ALL DEVICES AND WIRING METHODS IN WET WELL AND HANDHOLE SHALL BE APPROVED FOR CLASS 1 DIVISION 1 GROUP D AREAS. ALL DEVICES AND WIRING METHODS IN VALVE VAULT SHALL BE APPROVED FOR CLASS 1 DIVISION 2 GROUP D AREAS
4. ALL WIRING DEVICES INSTALLED UNDER SHELTER SHALL BE WEATHER PROOF.
5. ALL ELECTRICAL EQUIPMENT ENCLOSURES SHALL BE MINIMUM NEMA 3R.
6. ALL CORD FITTINGS IN HANDHOLE SHALL BE SEALING TYPE CLASS 1 DIVISION 1 GROUP D APPROVED.
7. ALL INSTALLATION HARDWARE AND ACCESSORIES IN THE WET WELL SHALL BE STAINLESS STEEL.
8. OFFSET ELECTRICAL PANELS SUCH THAT PANEL OUTER DOORS AND REMOVABLE ENCLOSURE COVERS ARE FLUSH WITH THE WORKING SPACE SIDE (LIGHT FIXTURE SIDE) OF THE SHELTER POSTS.
9. LEAVE 30" MINIMUM WIDTH UNOBSTRUCTED MOUNTING SPACE FOR FUTURE SCADA/RTU PANEL. DOOR MUST OPEN UNOBSTRUCTED TOWARDS VALVE VAULT.
10. WET WELL AND VALVE VAULT LIGHT FIXTURES SHALL BE FAMILY GROUP "LEDH". VALVE VAULT LIGHT SWITCH SHALL BE EXPLOSION PROOF.
11. SHELTER LIGHT FIXTURE SHALL BE FAMILY GROUP "FP". PROVIDE PHOTO CELL TO CONTROL FIXTURE.
12. THE PUMP CONTROL PANEL SHALL BE A STANDARD, PREDESIGNED, OFF THE SHELF PACKAGED DUPLEX PUMP CONTROL PANEL FURNISHED BY THE PUMP SUPPLIER. SEE SPECIFICATION SECTION 11324 FOR ADDITIONAL DETAILS. INSTALL AND CONNECT PUMP CONTROL PANEL PER MANUFACTURER'S INSTRUCTIONS.
13. INTRINSICALLY SAFE CIRCUITS SHALL BE INSTALLED PER NEC AND CONNECTED TO THE PUMP CONTROL PANEL PER THE PANEL MANUFACTURER'S INSTRUCTIONS. INTRINSICALLY SAFE WIRING SHALL BE RUN IN CONDUITS SEPARATE FROM NON-INTRINSICALLY SAFE WIRING.
14. INSTALL FLOAT SWITCHES SUCH THAT THEY ARE REACHABLE FROM THE WET WELL ACCESS LADDER, ARE MINIMALLY AFFECTED BY TURBULENCE, ARE SUFFICIENTLY WELL ANCHORED, ARE MINIMALLY PRONE TO ENTANGLEMENT OF ANY KIND, IN A MANNER THAT ALLOWS HOISTING THE SWITCHES UPWARD FOR CLEANING, AND IN A MANNER THAT PROVIDES THE MAXIMUM LEVEL OF RELIABLE OPERATION. INSTALL PER MANUFACTURER'S INSTRUCTIONS. FLOAT HEIGHT SHALL BE PER MECHANICAL DRAWINGS. PROVIDE 24" MINIMUM EXCESS FLOAT CABLE TO ALLOW FOR HEIGHT ADJUSTMENT.
15. ROUTE AND HANG INTEGRAL DEVICE AND EQUIPMENT CORDS IN WET WELL IN A MANNER THAT IS MINIMALLY PRONE TO ENTANGLEMENT OF ANY KIND AND SUCH THAT PUMP STATION ACCESS, MAINTENANCE, AND OPERATION IS MINIMALLY IMPACTED. PROVIDE ANCHORS AND CORD GRIPS AS REQUIRED TO HANG CORDS IN A MANNER RECOMMENDED BY THE MANUFACTURER AND IN A MANNER THAT ACHIEVES THE BEST ORGANIZED INSTALLATION AND THE MOST RELIABLE OPERATION. CABLE HANGING HARDWARE SHALL PROVIDE RELIABLE CABLE ANCHORAGE AND SHALL ALLOW CONVENIENT CABLE REMOVAL. CABLE INSTALLATION AND HANGING HARDWARE SHALL BE STAINLESS STEEL.
16. PROVIDE SEALING CORD FITTINGS FOR ALL INTEGRAL CORD CONNECTED DEVICES AND EQUIPMENT IN HANDHOLE. ROUTE INTEGRAL DEVICE AND EQUIPMENT CORDS THRU 3" SLEEVES BETWEEN HANDHOLE AND WET WELL. PROVIDE AN ADEQUATE NUMBER OF CORD ROUTING SLEEVES TO FACILITATE CONVENIENT INSTALLATION AND REMOVAL OF DEVICES AND EQUIPMENT WITHOUT DAMAGE TO INTEGRAL CORDS. SEAL SLEEVE PENETRATIONS IN HANDHOLE AND WET WELL WALLS.
17. HANDHOLE SHALL BE NOMINALLY 4'X4' AND SHALL PROVIDE CONVENIENT ACCESS TO INSTALL AND REMOVE INTEGRAL DEVICE AND EQUIPMENT CORDS WITHOUT DAMAGE. SEAL OFFS AND JUNCTION BOXES SHALL BE EASILY ACCESSIBLE AND SHALL BE NOMINALLY 18" BELOW HANDHOLE LID. HANDHOLE COVER SHALL BE GASKETED. ALL FITTINGS IN HANDHOLE SHALL BE WATER TIGHT CLASS 1 DIVISION 1 GROUP D APPROVED. SPLICES IN HANDHOLE SHALL BE WATER PROOF. ENSURE HANDHOLE DRAINS TO WET WELL. (SEE CIVIL DRAWINGS)
18. PROVIDE FLOW METER SYSTEM PER MANUFACTURER'S INSTRUCTIONS. PROVIDE GROUNDING RINGS. PROVIDE REMOTE SIGNAL CONVERTER (FT) ON SHELTER POST IN MINIMUM NEMA 3R LOCKING STEEL ENCLOSURE. SEE SPECIFICATION SECTION 17200 FOR ADDITIONAL DETAILS.
19. LIMIT SWITCHES SHALL BE PER SPECIFICATION SECTION 15100-2.03.D
20. CONNECT TO EXISTING 3/4" STREET LIGHTING CONDUIT IN THIS AREA AND REPLACE THE CONDUIT AS SHOWN PRIOR TO THE CONSTRUCTION OF THE NEW CURB AND GUTTER.
21. PRIMARY CONDUIT IS TO HAVE A MINIMUM CLEARANCE OF 6" BELOW BOTTOM OF BARRIER CURB. CENTERLINE ELEVATION OF 10.25.
22. ELECTRICAL EQUIPMENT IS TO BE SUPPORTED IN THE POSITION INDICATED WITH AN EQUIPMENT RACK. SEE STRUCTURAL DRAWINGS.
23. GUARD POST, 8 INCH STEEL PIPE PER TACOMA POWER STANDARD C-UG-1400. COORDINATE FINAL LOCATION WITH TACOMA POWER'S INSPECTOR.
24. OBTAIN AN ELECTRICAL PERMIT FROM TACOMA POWER'S ELECTRICAL INSPECTION OFFICE. CALL 253-502-8277.
25. SECONDARY CONDUIT IS TO BE INSPECTED BY TACOMA POWER ELECTRICAL INSPECTION OFFICE IN ADDITION TO THE LOCAL ELECTRICAL AHJ BEFORE BACKFILLING OF TRENCH. CALL 253-502-8277, 24-HOURS PRIOR TO BACKFILLING FOR INSPECTION SCHEDULING WITH TACOMA POWER.

REV	DATE	DES	CHECK	APPROVALS	REVISION DESCRIPTION

DATE: 07-07-14	CIVIL REVIEW:
DESIGNED:	ARCH REVIEW:
DRAWN:	STRUC REVIEW:
CHECKED:	MECH REVIEW:
APPROVED:	

TETRA TECH
www.tetratech.com
1420 Fifth Avenue, Suite 600
Seattle, Washington 98101
Phone: 206-883-9300 Fax: 206-883-9301

BRANDY FRITCHER STATE OF WASHINGTON 39949 REGISTERED PROFESSIONAL ENGINEER

CITY OF FIFE
PS-10 REHABILITATION / PS-5 AND PS-6 WETWELL COATING
PS-10
ELECTRICAL SITE PLAN

FILE NO:
PROJECT NO: 135-12584-14002
DWG NO: E-103
SHEET: OF

This drawing is full size when 22"x 34" or is reduced to half size when 11"x17"

COPYRIGHT 2010, TETRA TECH, ALL RIGHTS RESERVED

Path: \\WRS38FS1\Projects\12584\35-12584-14001\CAD\SheetFiles\E-103 ELECTRICAL SITE PLAN.dwg Plot date: Jul 07, 2014-04:47:25pm CAD User: bryan.thomas.
Xref Filename: 1 G-BS-22x34hz 1 C-XP-TOPO-CONTOURS 1 D-FP-WELL AND VAULT 1 S-FP-WELL AND VAULT 1 C-SP-SITE 1 GS-RF-WA_RF-STG 1

TRANS–PACIFIC INDUSTRIAL PARK 5

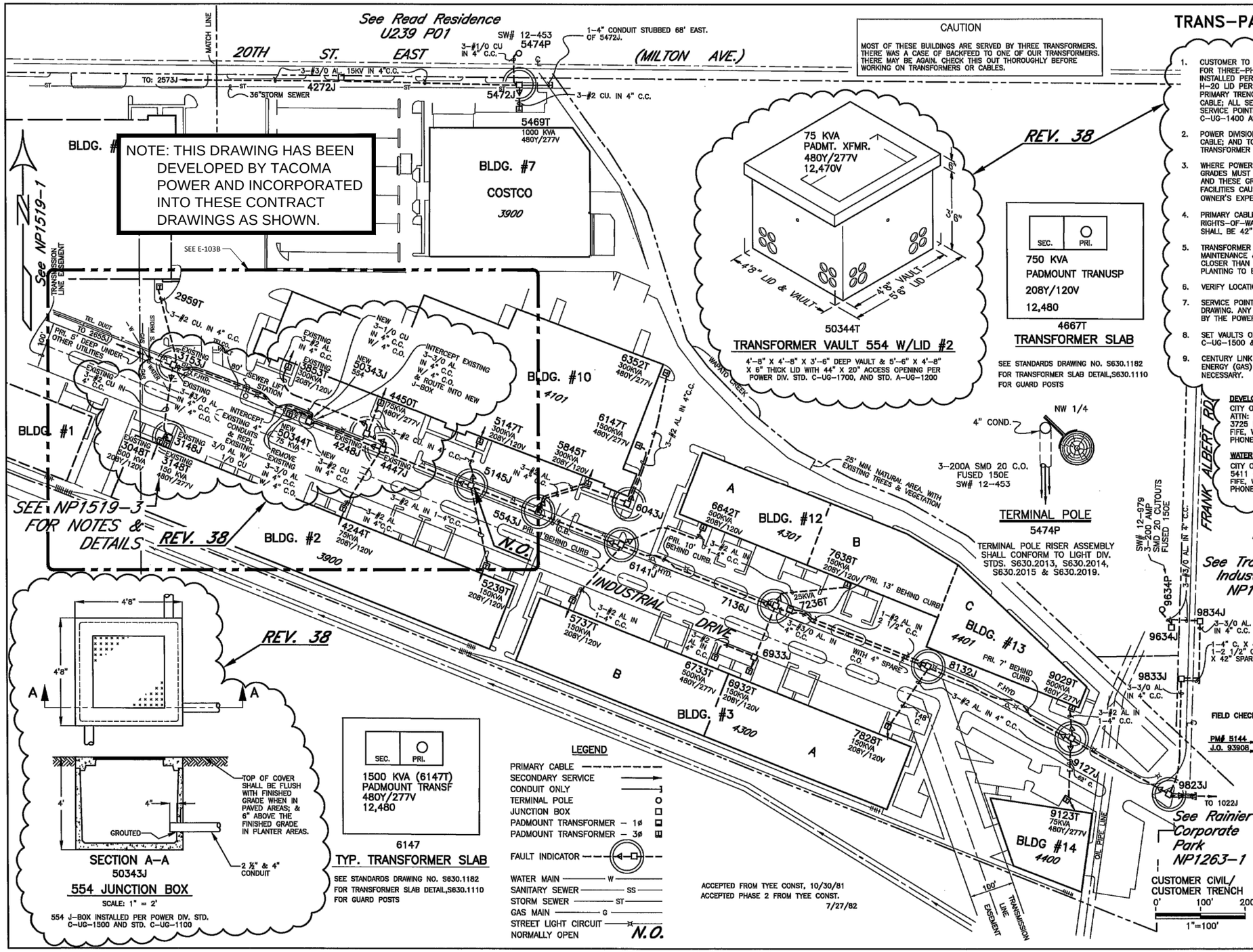

NOTE: THIS DRAWING HAS BEEN DEVELOPED BY TACOMA POWER AND INCORPORATED INTO THESE CONTRACT DRAWINGS AS SHOWN.

CAUTION

MOST OF THESE BUILDINGS ARE SERVED BY THREE TRANSFORMERS. THERE WAS A CASE OF BACKFEED TO ONE OF OUR TRANSFORMERS. THERE MAY BE AGAIN. CHECK THIS OUT THOROUGHLY BEFORE WORKING ON TRANSFORMERS OR CABLES.

50344T

TRANSFORMER VAULT 554 W/LID #2

4'–8" X 4'–8" X 3'–6" DEEP VAULT & 5'–6" X 4'–8" X 6" THICK LID WITH 44" X 20" ACCESS OPENING PER POWER DIV. STD. C–UG–1700, AND STD. A–UG–1200

REV. 38

SEC.	PRI.

750 KVA
PADMOUNT TRANUSP
208Y/120V
12,480

4667T

TRANSFORMER SLAB

SEE STANDARDS DRAWING NO. S630.1182 FOR TRANSFORMER SLAB DETAIL,S630.1110 FOR GUARD POSTS

NOTES

1. CUSTOMER TO FURNISH AND INSTALL ONE 554 VAULT WITH LID #2 FOR THREE–PHASE PADMOUNT TRANSFORMER PER STD. C–UG–1700, INSTALLED PER STD. A–UG–1200; ONE 554 JUNCTION BOX WITH H–20 LID PER STD. C–UG–1500, INSTALLED PER STD. A–UG–1100; PRIMARY TRENCH; 4" SCH. 40 GRAY PVC CONDUIT FOR PRIMARY CABLE; ALL SECONDARY CABLES IN CONDUIT FROM TRANSFORMER TO SERVICE POINTS; AND HEAVY DUTY GUARD POSTS PER STD. C–UG–1400 AS NECESSARY.
2. POWER DIVISION TO FURNISH AND INSTALL TRANSFORMER, PRIMARY CABLE; AND TO MAKE PRIMARY AND SECONDARY CONNECTIONS AT TRANSFORMER TERMINALS.
3. WHERE POWER DIVISION FACILITIES ARE TO BE INSTALLED, FINAL GRADES MUST BE ESTABLISHED AT NO EXPENSE TO POWER DIVISION AND THESE GRADES MAINTAINED. ANY ALTERATION OF POWER DIVISION FACILITIES CAUSED BY OWNER'S CHANGE OF GRADES WILL BE AT OWNER'S EXPENSE.
4. PRIMARY CABLE TO HAVE MINIMUM COVER OF 36" IN STREET RIGHTS–OF–WAY AND ON ALL PRIVATE PROPERTY. BOTTOM OF TRENCH SHALL BE 42" MINIMUM WHERE CONDUIT IS USED.
5. TRANSFORMER SHALL ALWAYS BE ACCESSIBLE FOR PURPOSES OF MAINTENANCE & CHANGE OUT. TRANSFORMER TO BE LOCATED NO CLOSER THAN 8 FEET FROM COMBUSTIBLE BUILDING SURFACES. NO PLANTING TO BE WITHIN 8 FEET OF TRANSFORMER.
6. VERIFY LOCATION OF ALL UNDERGROUND UTILITIES IN THE FIELD.
7. SERVICE POINTS SHALL BE CONNECTED AS SHOWN ON THIS FINAL DRAWING. ANY RELOCATION OF SERVICE POINTS MUST BE APPROVED BY THE POWER DIVISION ENGINEER.
8. SET VAULTS ON 9" CRUSHED COMPACTED ⅝" GRAVEL PER STD. C–UG–1500 & C–UG–1700.
9. CENTURY LINK COMMUNICATIONS, COMCAST CABLE, AND PUGET SOUND ENERGY (GAS) TO OCCUPY COMMON TRENCH WITH TACOMA POWER AS NECESSARY.

DEVELOPER (REV. 38)
CITY OF FIFE
ATTN: DAVID K. ZABELL
3725 PACIFIC HWY. E
FIFE, WA 98424
PHONE: 253–896–8620

ENGINEERING COMPANY (REV. 38)
TETRA TECH, INC.
ATTN: BRIAN CARTER
19803 NORTH CREEK PARKWAY
BOTHELL, WA 98011
PHONE: 253–732–1739

WATER COMPANY
CITY OF FIFE
5411 – 23RD ST. E
FIFE, WA 98424
PHONE: 253–922–9624

SEE NP1519–1 FOR NOTES & DETAILS

See Trans–Pacific Industrial Park II NP1779–1

REV. 38

PRELIMINARY
NOT TO BE USED FOR CONSTRUCTION PURPOSES
BY N. Worthington DATE 4–22–14

SECTION A–A
50343J

554 JUNCTION BOX

SCALE: 1" = 2'

554 J–BOX INSTALLED PER POWER DIV. STD. C–UG–1500 AND STD. C–UG–1100

SEC.	PRI.

1500 KVA (6147T)
PADMOUNT TRANSF
480Y/277V
12,480

6147

TYP. TRANSFORMER SLAB

SEE STANDARDS DRAWING NO. S630.1182 FOR TRANSFORMER SLAB DETAIL,S630.1110 FOR GUARD POSTS

LEGEND

- PRIMARY CABLE
- SECONDARY SERVICE
- CONDUIT ONLY
- TERMINAL POLE
- JUNCTION BOX
- PADMOUNT TRANSFORMER – 1ø
- PADMOUNT TRANSFORMER – 3ø
- FAULT INDICATOR
- WATER MAIN — W
- SANITARY SEWER — SS
- STORM SEWER — ST
- GAS MAIN — G
- STREET LIGHT CIRCUIT
- NORMALLY OPEN — N.O.

NO.	DATE	REVISION	BY	CHECKED	APPROVED
38		INSTALL 50343J & 50344T	NWW	DLL	
37	8–10–11	ADJUST BOUNDARIES & ADD SWITCH NUMBERS	PAR	NWW	JNG
36	8–10–11	UPDATE CBL SIZE; 5145J TO 5239T, 6141J TO 5737T, 6141J TO 6642T, 7136J TO 7638T, 9127J TO 9029T	PAR	NWW	JNG
35	3–30–04	CHG 2959V/CC TO 2959T/PRI	SJP	PJH	ML
34	10–8–03	REM. 4667J, 466T & CABLE	SJP	PJH	ML

FIELD CHECK
PM# 5144
J.O. 93908

CITY OF TACOMA
DEPARTMENT OF PUBLIC UTILITIES
LIGHT DIVISION

TRANS–PACIFIC INDUSTRIAL PK.5
3200–4400 INDUSTRIAL DRIVE
ELECTRICAL LAYOUT & DETAIL

SUBMITTED	DESIGNED	DRAWN	CHECKED
D. M. CAMPBELL, SECTION SUPERVISOR	TES	JFV	TES
APPROVED: E. E. KILGA, ASSISTANT MANAGER SYSTEMS ENGINEERING	DATE 3–11–81	SCALE 1"=100'	

MAP: N.W. & S.W. 12–20–3, N.E. 11–20–3
ONE LINE UW1062 UPLB D5
DRAWING NO. NP1519–2

REV	DATE	DES	CHECK	APPROVALS	REVISION DESCRIPTION

DATE: 07–07–14
DESIGNED:
DRAWN:
CHECKED:
APPROVED:
CIVIL REVIEW:
ARCH REVIEW:
STRUC REVIEW:
MECH REVIEW:

TETRA TECH
www.tetratech.com
1420 Fifth Avenue, Suite 600
Seattle, Washington 98101
Phone: 206-883-9300 Fax: 206-883-9301

RANDY FRITCHIE, STATE OF WASHINGTON, 39949, REGISTERED PROFESSIONAL ENGINEER, 7-7-14

CITY OF FIFE
PS-10 REHABILITATION / PS-5 AND PS-6 WETWELL COATING
PS-10
TACOMA POWER REVISION PLAN

FILE NO:
PROJECT NO: 135–12584–14002
DWG NO: E-103A
SHEET: OF

This drawing is full size when 22"x 34" or is reduced to half size when 11"x17"

COPYRIGHT 2010, TETRA TECH, ALL RIGHTS RESERVED

Path: \\WRS318FS1\Projects\12584\135-12584-14001\CAD\SheetFiles\E-103A.dwg Plot date: Jul 07, 2014-0401pm CAD User: bryan.thomsy.
Xref Filename: | G-BS-22x34hz | GS-RF-VA | _RF-SIG |

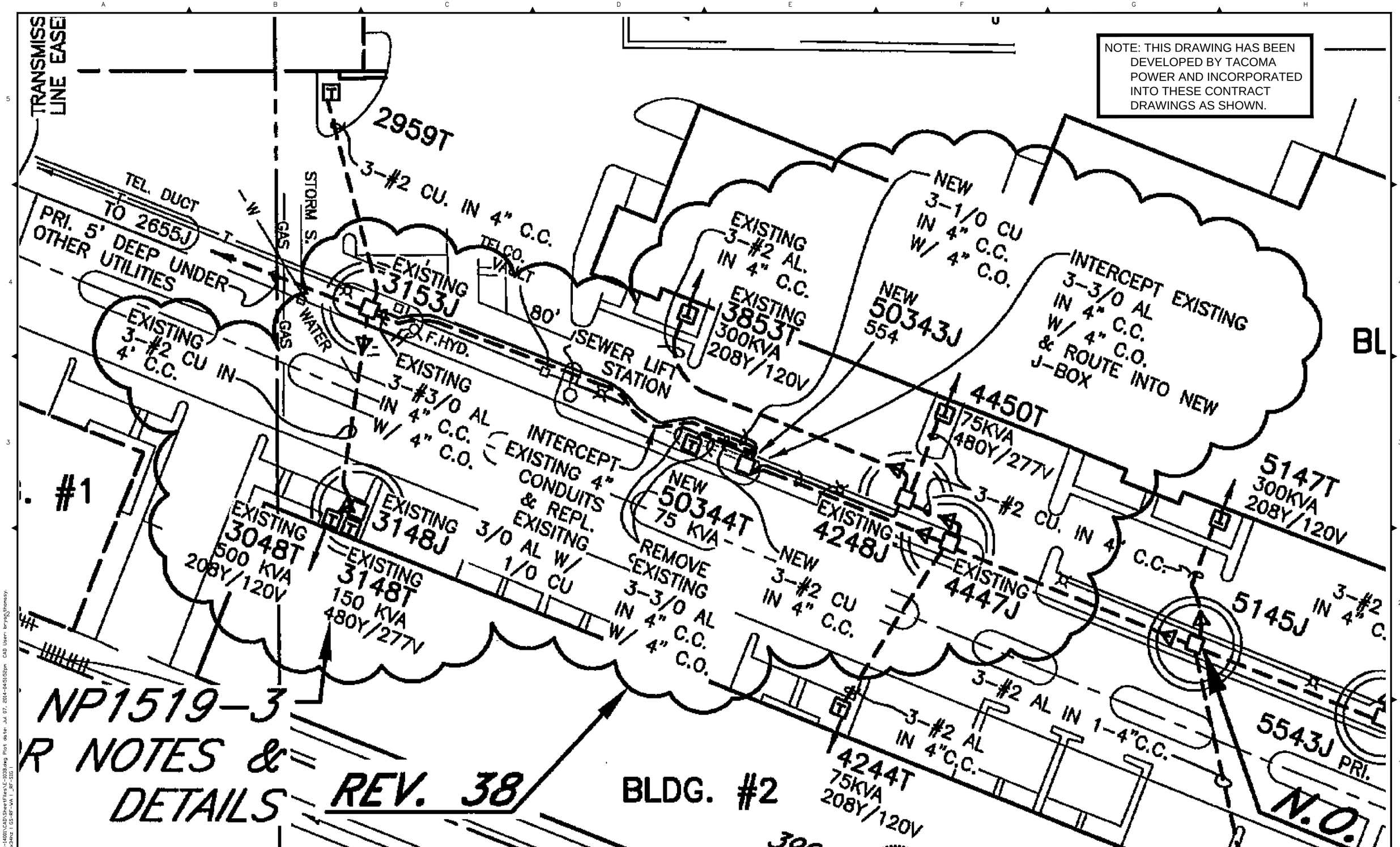

REV	DATE	DES	CHECK	APPROVALS	REVISION DESCRIPTION

DATE: 07-07-14	CIVIL REVIEW:
DESIGNED:	ARCH REVIEW:
DRAWN:	STRUC REVIEW:
CHECKED:	MECH REVIEW:
APPROVED:	

TETRA TECH
www.tetratech.com
1420 Fifth Avenue, Suite 600
Seattle, Washington 98101
Phone: 206-883-9300 Fax: 206-883-9301

RANDY FRITCHMAN, STATE OF WASHINGTON, 39949, REGISTERED PROFESSIONAL ENGINEER
7-7-14

CITY OF FIFE
PS-10 REHABILITATION / PS-5 AND PS-6 WETWELL COATING
PS-10

TACOMA POWER REVISION PARTIAL PLAN

FILE NO:
PROJECT NO: 135-12584-14002
DWG NO: E-103B
SHEET: OF

Path: P:\12584\135-12584-14001\CAD\SheetFiles\E-103B.dwg Plot date: Jul 07, 2014-04:51:52pm CAD User: kryanj\thomasy.
Xref Filename: I G-BS-22x34hz I GS-RF-VA I _RF-SIG I

This drawing is full size when 22"x 34" or is reduced to half size when 11"x17"

COPYRIGHT 2010, TETRA TECH, ALL RIGHTS RESERVED

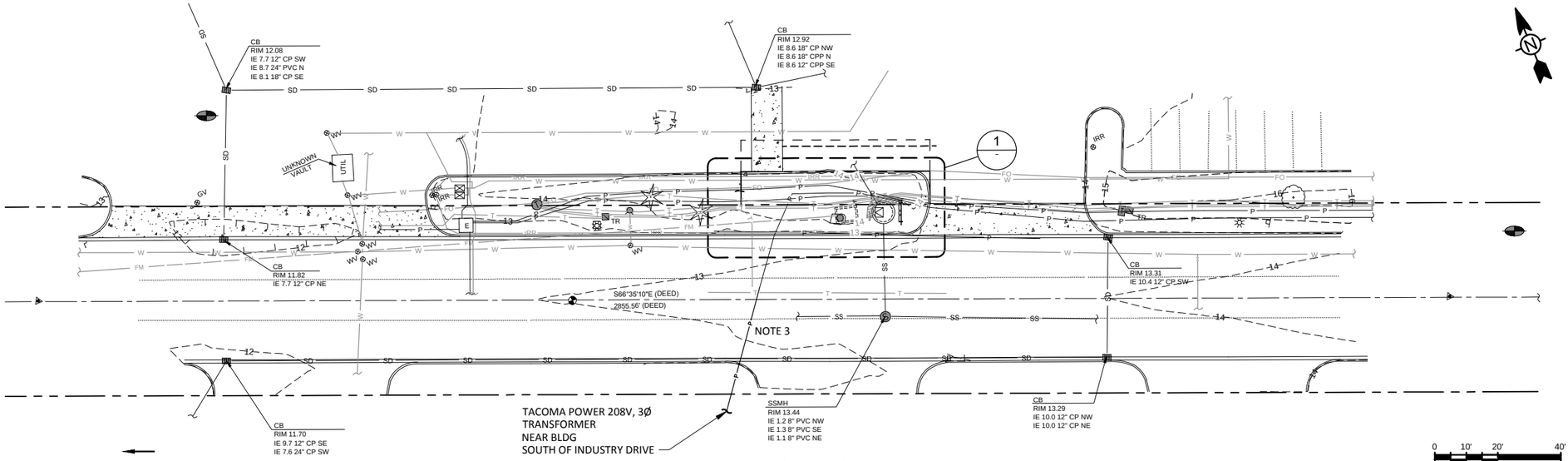

EXISTING SITE PLAN

0 10' 20' 40'
SCALE: 1" = 20'

CONSTRUCTION NOTES

1. COORDINATE WITH TACOMA POWER FOR DISCONNECTION OF EXISTING SERVICE AT SECONDARY SERVICE BOX ACROSS THE STREET. SEE SPECIFICATION SECTION 16000-1.08.
2. REMOVE EXISTING ELECTRICAL EQUIPMENT AND EXISTING ELECTRICAL EQUIPMENT RACK AND ALL ASSOCIATED ELECTRICAL WORK.
3. PULL WIRES OUT OF EXISTING CONDUIT BACK TO SECONDARY SERVICE BOX NEAR TRANSFORMER ACROSS THE STREET. ABANDON EXISTING SECONDARY SERVICE CONDUIT.

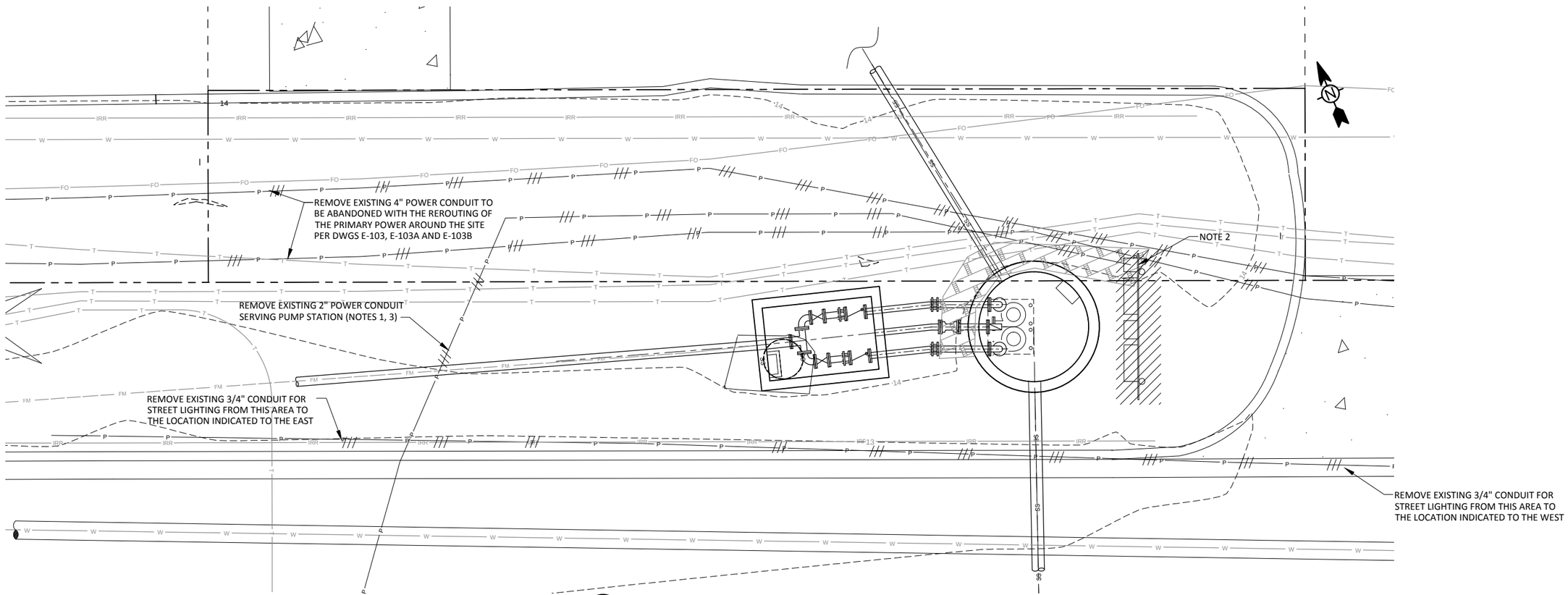

1 EXISTING SITE ELECTRICAL PLAN

SCALE: 1"=3'-0"

REV	DATE	DES	CHECK	APPROVALS	REVISION DESCRIPTION

DATE: 07-07-14	CIVIL REVIEW:
DESIGNED:	ARCH REVIEW:
DRAWN:	STRUC REVIEW:
CHECKED:	MECH REVIEW:
APPROVED:	

TETRA TECH
www.tetratech.com
1420 Fifth Avenue, Suite 600
Seattle, Washington 98101
Phone: 206-883-9300 Fax: 206-883-9301

RANDY FRIESEN STATE OF WASHINGTON 39949 REGISTERED PROFESSIONAL ENGINEER 7-7-14

CITY OF FIFE
PS-10 REHABILITATION / PS-5 AND PS-6 WETWELL COATING
PS-10

ELECTRICAL DEMOLITION PLAN

FILE NO:
PROJECT NO: 135-12584-14002
DWG NO: E-104
SHEET: OF

This drawing is full size when 22"x 34" or is reduced to half size when 11"x17"

COPYRIGHT 2010, TETRA TECH, ALL RIGHTS RESERVED

Path: \\WRS318FS1\Projects\12584\135-12584-14001\CAD\Sheetfiles\E-104 PS-10 ELECTRICAL DEMOLITION PLAN.dwg Plot date: Jul 07, 2014-04:47:54pm CAD User: bryan.thomas
Xref Filename: D-SC-VAULT-EX | D-FP-VAULT-EX | C-XP-TOPO-CONTOURS | C-XP-TOPO-CONTOURS | G-BS-28x34hz | C-SP-SITE | GS-RF-WA | RF-SIG |

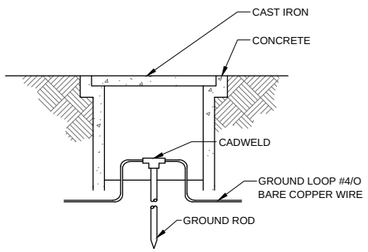

NOTES:

1. CAST INTO COVER THE FOLLOWING "GROUND".

1 GROUND ROD WELL
SCALE: NONE

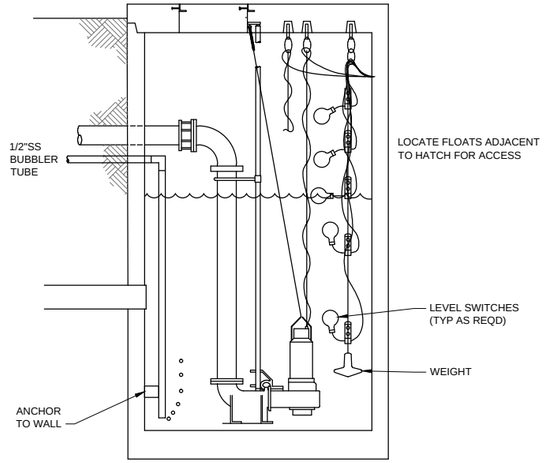

2 WET WELL CABLE MANAGEMENT
SCALE: NONE

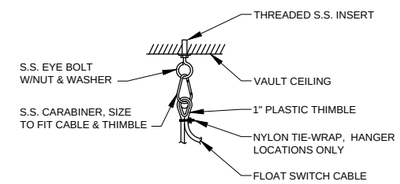

3 CABLE SUPPORT
SCALE: NONE

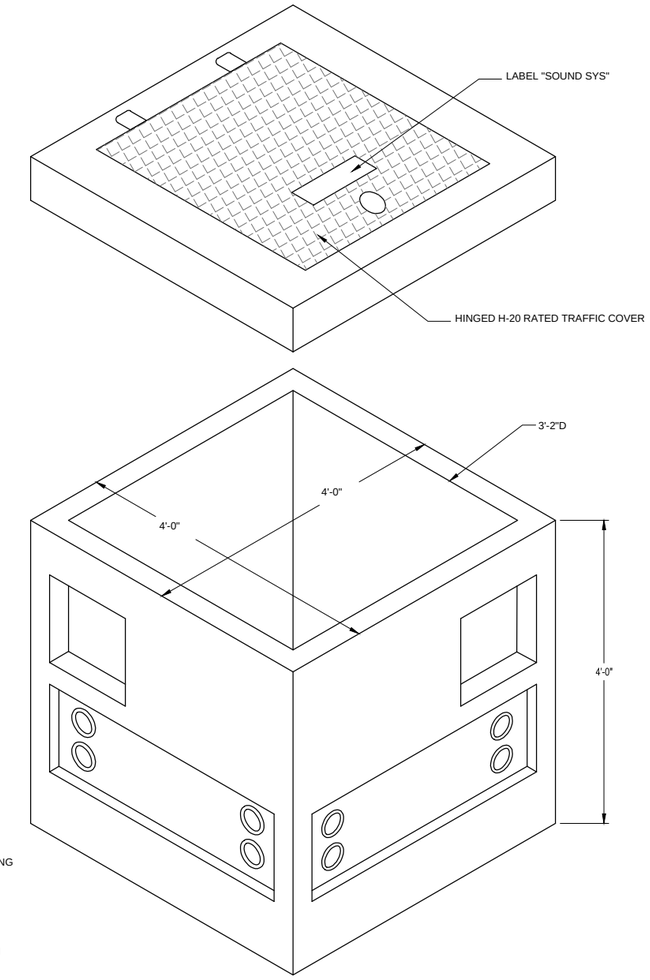

NOTES:

1. UTILITY VAULT BASE NO. 444-L OR APPROVED EQUAL.
2. AASHTO 20 COVER, GALVANIZED DIAMOND PLATE COVER WITH LOCKING LATCH NO. 44-332P.
3. 2-1/2" DIAMETER GROUND ROD KNOCKOUT, 2 PLACES IN FLOOR.
4. 4-3/4" DIAMETER KNOCKOUT, 4 EACH SIDE, 4 SIDES.
5. GALVANIZED "C" CHANNEL, 2'-0", 1 EACH SIDE, 4 SIDES.
6. DRAIN TO WET WELL.

4 HANDHOLE
SCALE: NONE

NOTES:

1. ALL DETAILS ARE TYPICAL FOR APPLICABLE INSTALLATIONS. THE CONTRACTOR MAY ADAPT DETAILS TO APPLICABLE INSTALLATIONS AS NEEDED OR MAY SUBMIT EQUAL OR BETTER APPROACHES. ACCEPTABILITY OF ALTERNATE APPROACHES IS SUBJECT TO THE APPROVAL OF THE PROJECT ENGINEER

REV	DATE	DES	CHECK	APPROVALS	REVISION DESCRIPTION

DATE: 07-07-14
DESIGNED:
DRAWN:
CHECKED:
APPROVED:
CIVIL REVIEW:
ARCH REVIEW:
STRUC REVIEW:
MECH REVIEW:

This drawing is full size when 22"x 34" or is reduced to half size when 11"x17"

TETRA TECH
www.tetratech.com
1420 Fifth Avenue, Suite 600
Seattle, Washington 98101
Phone: 206-883-9300 Fax: 206-883-9301

RANDY FRITCHMAN
STATE OF WASHINGTON
39949
REGISTERED PROFESSIONAL ENGINEER
7-7-14

CITY OF FIFE
PS-10 REHABILITATION / PS-5 AND PS-6 WETWELL COATING
PS-10
STANDARD ELECTRICAL DETAILS

FILE NO:
PROJECT NO: 135-12584-14002
DWG NO: E-105
SHEET: OF

COPYRIGHT 2010, TETRA TECH, ALL RIGHTS RESERVED

Path: P:\12584\135-12584-14001\CAD\SheetFiles\ARCHIVE\E-105 STANDARD ELECTRICAL DETAILS.dwg Plot date: Jul 07, 2014-03:22:22pm CAD User: bryan.thomas
Xref Filename: I GS-BS-26x34hz I GS-RF-WA I _RF-SIG I

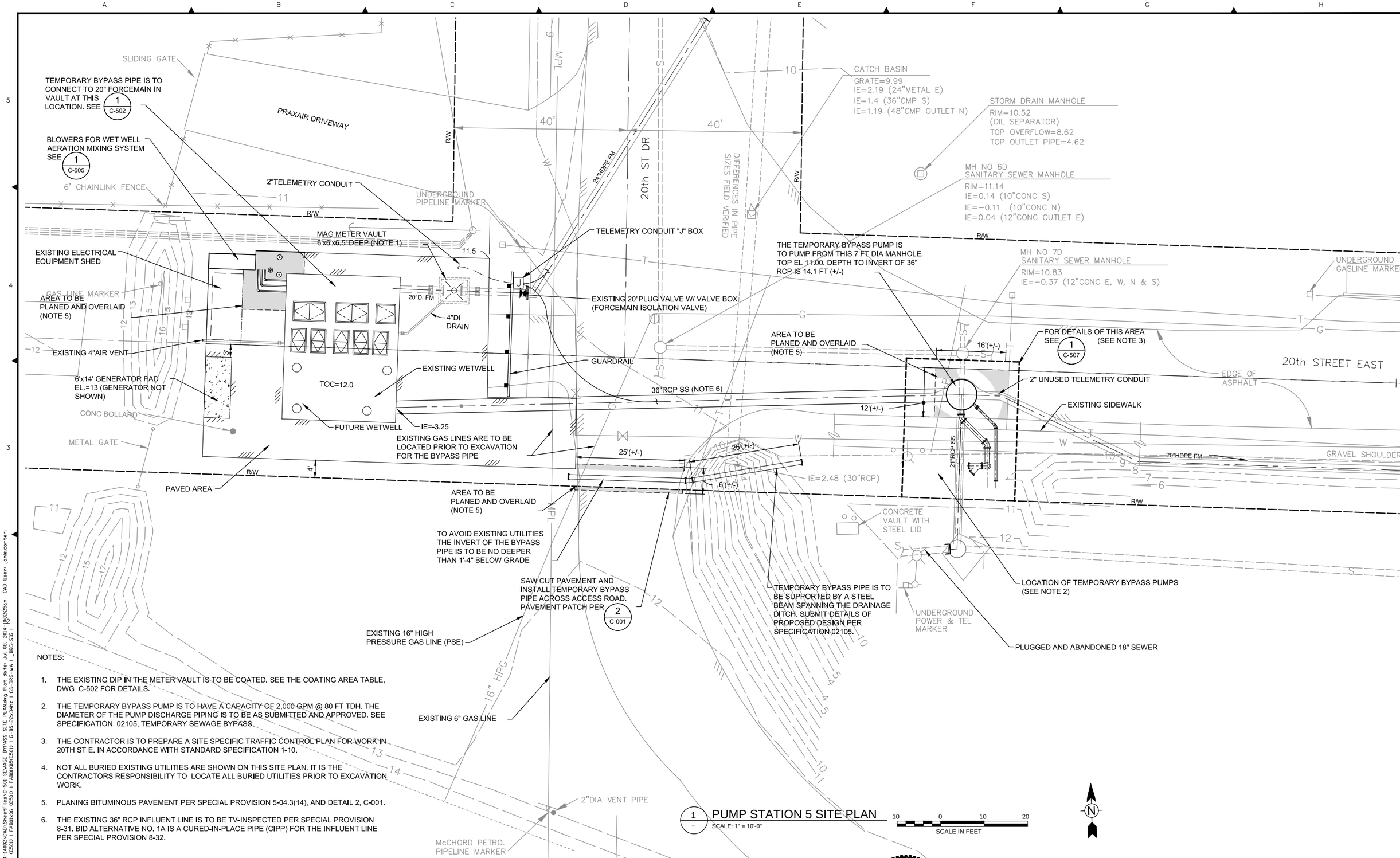

NOTES:

1. THE EXISTING DIP IN THE METER VAULT IS TO BE COATED. SEE THE COATING AREA TABLE, DWG C-502 FOR DETAILS.
2. THE TEMPORARY BYPASS PUMP IS TO HAVE A CAPACITY OF 2,000 GPM @ 80 FT TDH. THE DIAMETER OF THE PUMP DISCHARGE PIPING IS TO BE AS SUBMITTED AND APPROVED. SEE SPECIFICATION 02105, TEMPORARY SEWAGE BYPASS.
3. THE CONTRACTOR IS TO PREPARE A SITE SPECIFIC TRAFFIC CONTROL PLAN FOR WORK IN 20TH ST E. IN ACCORDANCE WITH STANDARD SPECIFICATION 1-10.
4. NOT ALL BURIED EXISTING UTILITIES ARE SHOWN ON THIS SITE PLAN. IT IS THE CONTRACTORS RESPONSIBILITY TO LOCATE ALL BURIED UTILITIES PRIOR TO EXCAVATION WORK.
5. PLANING BITUMINOUS PAVEMENT PER SPECIAL PROVISION 5-04.3(14), AND DETAIL 2, C-001.
6. THE EXISTING 36" RCP INFLUENT LINE IS TO BE TV-INSPECTED PER SPECIAL PROVISION 8-31. BID ALTERNATIVE NO. 1A IS A CURED-IN-PLACE PIPE (CIPP) FOR THE INFLUENT LINE PER SPECIAL PROVISION 8-32.

1 – PUMP STATION 5 SITE PLAN
SCALE: 1" = 10'-0"

10 0 10 20
SCALE IN FEET

N

REV	DATE	DES	CHECK	APPROVALS	REVISION DESCRIPTION

DATE: 07-07-14	CIVIL REVIEW:
DESIGNED:	ARCH REVIEW:
DRAWN:	STRUC REVIEW:
CHECKED:	MECH REVIEW:
APPROVED:	

TETRA TECH
www.tetratech.com
1420 Fifth Avenue, Suite 600
Seattle, Washington 98101
Phone: 206-883-9300 Fax: 206-883-9301

BRUCE R. GRAVELLE III
STATE OF WASHINGTON
23164
REGISTERED PROFESSIONAL ENGINEER
7-7-14

CITY OF FIFE
PS-10 REHABILITATION / PS-5 AND PS-6 WETWELL COATING
PS-5

SEWAGE BYPASS SITE PLAN

FILE NO:
PROJECT NO: 135-12584-14002
DWG NO: C-501
SHEET: OF

This drawing is full size when 22"x 34" or is reduced to half size when 11"x17"

COPYRIGHT 2010, TETRA TECH, ALL RIGHTS RESERVED

Path: P:\12584\135-12584-14002\CAD\SheetFiles\C-501 SEWAGE BYPASS SITE PLAN.dwg Plot date: Jul 08, 2014-10:02:25am CAD User: jamie.carter
Xref Filename: | FAB01X01 (C501) | FAB01X06 (C501) | FAB01X05(C501) | G-BS-22x34hz | GS-BRG-VA | _BRG-STG |

J:\293007\3FAB02\FAB02034 xref FAB01X01, FAB01X05, FAB01X06 6-11-01

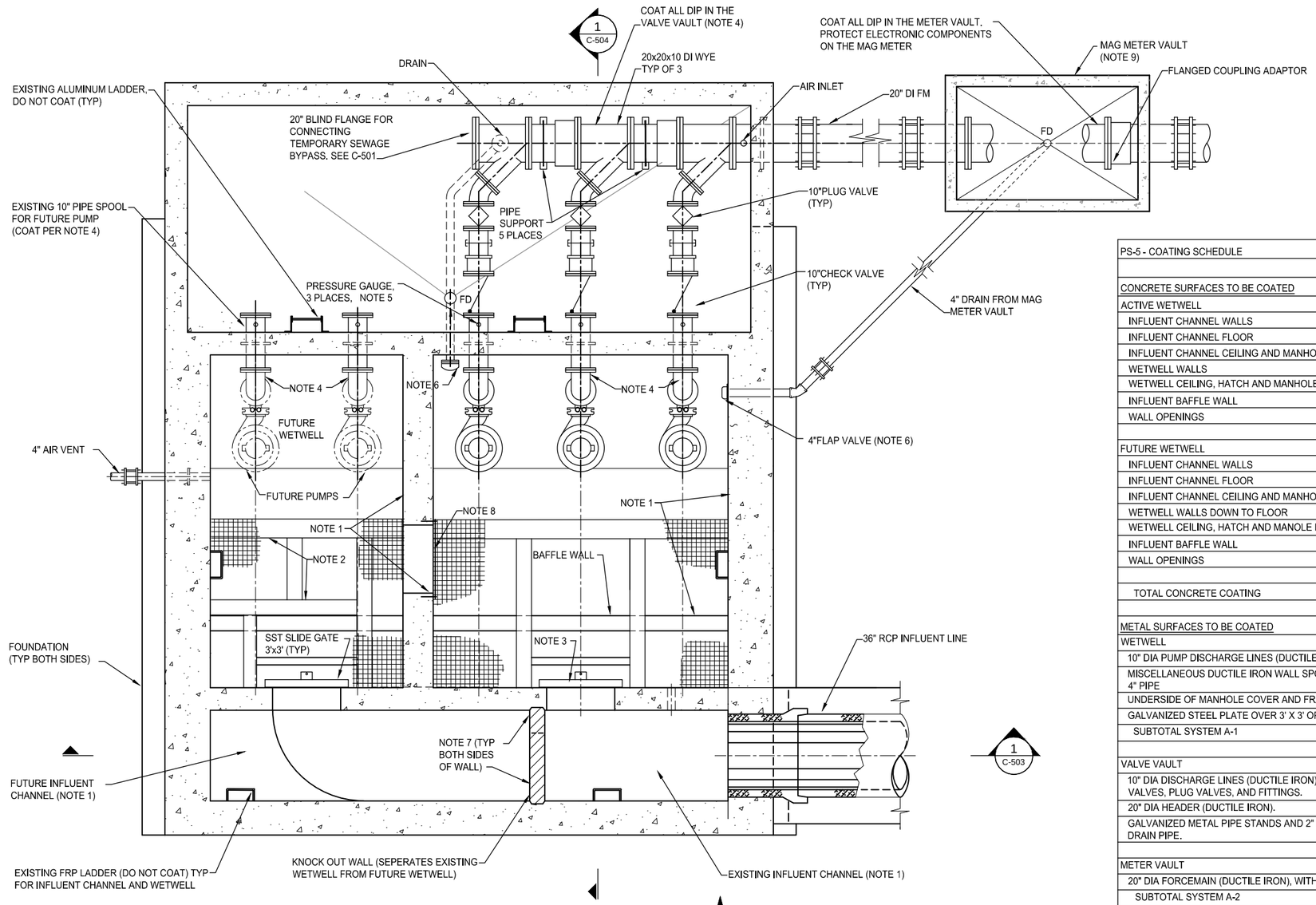

1 C-501 PLAN - PUMP STATION 5

SCALE: 3/8"=1'-0"

PS-5 - COATING SCHEDULE			
CONCRETE SURFACES TO BE COATED	AREA(SF)	SYSTEM	COMMENTS
ACTIVE WETWELL			
INFLUENT CHANNEL WALLS	328	A-3a, FIBER REINFORCED EPOXY OR A-3b ALTERNATIVE POLYURETHANE	SURFACE PREPARATION: PER SSPC - SP 13. SEE COATING SYSTEM REQUIREMENTS.
INFLUENT CHANNEL FLOOR	32		
INFLUENT CHANNEL CEILING AND MANHOLE RISER	32		
WETWELL WALLS	1,067		
WETWELL CEILING, HATCH AND MANHOLE RISERS	261		
INFLUENT BAFFLE WALL	200		
WALL OPENINGS	40		
FUTURE WETWELL			
INFLUENT CHANNEL WALLS	506		
INFLUENT CHANNEL FLOOR	56		
INFLUENT CHANNEL CEILING AND MANHOLE RISER	56		
WETWELL WALLS DOWN TO FLOOR	915		
WETWELL CEILING, HATCH AND MANOLE RISERS	173		
INFLUENT BAFFLE WALL	130		
WALL OPENINGS	12		
TOTAL CONCRETE COATING	3,808		
METAL SURFACES TO BE COATED	AREA(SF)	SYSTEM	COMMENTS
WETWELL		A-1 HIGH BUILD EPOXY	PIPE COAITNG AREA INCREASED BY 20% TO ACCOUNT FOR FLANGES AND MISCELLANEOUS PIPE SUPPORTS. SURFACE PREPARATION: SEE SPECIFICATIONS.
10" DIA PUMP DISCHARGE LINES (DUCTILE IRON)	160		
MISCELLANEOUS DUCTILE IRON WALL SPOOLS FOR 10" AND 4" PIPE	8		
UNDERSIDE OF MANHOLE COVER AND FRAME	20		
GALVANIZED STEEL PLATE OVER 3' X 3' OPENING	12		
SUBTOTAL SYSTEM A-1	168		
VALVE VAULT		A-2 HIGH BUILD EPOXY	
10" DIA DISCHARGE LINES (DUCTILE IRON), WITH CHECK VALVES, PLUG VALVES, AND FITTINGS.	76		
20" DIA HEADER (DUCTILE IRON).	76		
GALVANIZED METAL PIPE STANDS AND 2" DIA GALVANIZED DRAIN PIPE.	12		
METER VAULT			
20" DIA FORCEMAIN (DUCTILE IRON), WITH METER.	41		
SUBTOTAL SYSTEM A-2	205		
BOLLARDS	2	B-1 POLYURETHANE	SEE COATING SYSTEM REQUIREMENTS
EXPOSED PVC AERATION PIPING	24		
SUBTOTAL SYSTEM B-1	26		

NOTES:

1. REMOVE EXISTING POLYUREA COATING ON ALL CONCRETE SURFACES IN THE WETWELL AND THE INFLUENT CHANNEL AND APPLY NEW CONCRETE COATING IN ACCORDANCE WITH THE SPECIFICATIONS.
2. EXISTING FRP BEAMS FOR GRATING PLATFORM (DO NOT COAT).
3. THIS SST SLIDE GATE IS TO BE REMOVED AND DELIVERED TO THE CITY FOR REPAIR, AND REINSTALLED AFTER REPAIR IS COMPLETED PER THE SPECIFICATIONS.
4. EXISTING FERROUS METALS IN THE WETWELL AND IN THE VALVE VAULT AS WELL AS THE METER VAULT ARE TO BE COATED WITH HIGH BUILD EPOXY IN ACCORDANCE WITH THE SPECIFICATIONS. SURFACE PREPARATION PER THE SPECIFICATIONS.
5. MASK THE PRESSURE GAUGE UNTIL COATING OF VAULT PIPING IS COMPLETED.
6. REMOVE THE EXISTING 4" FLAP VALVE, ATTACH 4" 90 DEGREE ELL AND EXTEND 4" SCHEDULE 40 PVC DRAIN DOWN INTO WETWELL. SEE DWG C-504.
7. EXISTING CAST-IN-PLACE KNOCKOUT WALL. APPLY 1" THICK EPOXY PATCHING MATERIAL TO SEAL JOINT ALONG SIDES AND BOTTOM (INFILL THE JOINT AROUND THE PERIMETER OF THE WALL, BOTH SIDES).
8. COAT THE GALVANIZED STEEL PLATE OVER THE 3' X 3' OPENING IN DIVIDER WALL. OPENING IS NEAR THE WETWELL FLOOR.
9. MASK THE INDICATOR/TRANSMITTER ON THE MAGNETIC FLOW METER PRIOR TO SAND BLASTING AND COATING.

REV	DATE	DES	CHECK	APPROVALS	REVISION DESCRIPTION

DATE: 07-07-14
DESIGNED:
DRAWN:
CHECKED:
APPROVED:
CIVIL REVIEW:
ARCH REVIEW:
STRUC REVIEW:
MECH REVIEW:

TETRA TECH
www.tetratech.com
1420 Fifth Avenue, Suite 600
Seattle, Washington 98101
Phone: 206-883-9300 Fax: 206-883-9301

BRUCE R. GRAVELEY, STATE OF WASHINGTON, 23364, REGISTERED PROFESSIONAL ENGINEER, 7-7-14

CITY OF FIFE
PS-10 REHABILITATION / PS-5 AND PS-6 WETWELL COATING
PS-5

COATING NOTES AND AREA CALCULATIONS

FILE NO:
PROJECT NO: 135-12584-14002
DWG NO: C-502
SHEET: OF

This drawing is full size when 22"x 34" or is reduced to half size when 11"x17"

COPYRIGHT 2010, TETRA TECH, ALL RIGHTS RESERVED

Path: P:\12584\135-12584-14002\CAD\SheetFiles\C-502 COATING NOTES AND AREA CALCULATIONS.dwg Plot date: Jul 07, 2014-03:57:32pm CAD User: jamie.carter
Xref Filename: | G-BS-25x34hz | GS-BRG-VA1_BRG-SIG |

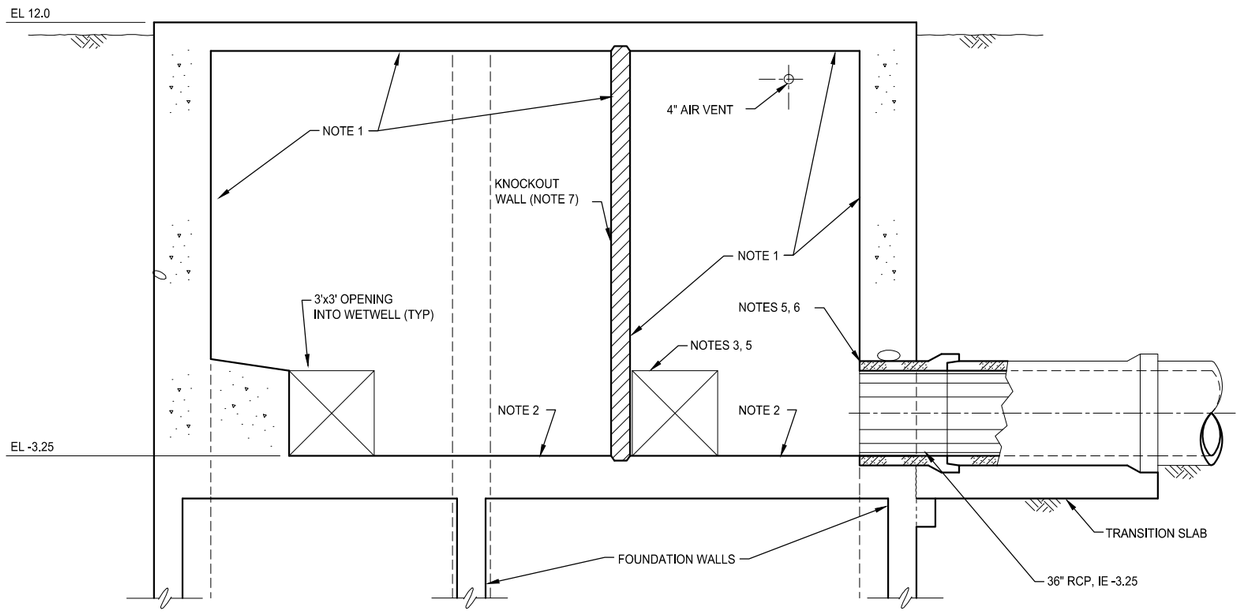

NOTES:

1. REMOVE EXISTING POLYUREA COATING ON ALL CONCRETE SURFACES IN THE WETWELL AND APPLY NEW CONCRETE COATING IN ACCORDANCE WITH THE SPECIFICATIONS.
2. THE FLOOR OF THE INFLUENT CHANNEL IS COATED WITH POLYUREA COATING WHICH IS TO BE REMOVED AND REPLACED WITH NEW CONCRETE COATING.
3. THE SST SLIDE GATE ON THE OPPOSITE OF THIS 3' X 3' OPENING INTO THE WETWELL IS TO BE REMOVED AND DELIVERED TO THE CITY FOR REPAIR AND REINSTALLED AFTER REPAIR IS COMPLETED.
4. COAT MANHOLE CASTINGS AND UNDERSIDE OF LIDS WITH HIGH-BUILD EPOXY IN ACCORDANCE WITH THE SPECIFICATIONS. WHITE METAL BLAST CLEANED (SSPC-SP5).
5. CONCRETE REPAIR IS TO BE COMPLETED UNDER FORCE ACCOUNT PER THE SPECIFICATIONS.
6. THE CONCRETE NEAR THE DISCHARGE OF THE 36" INFLUENT LINE HAS SIGNIFICANT CONCRETE CORROSION DAMAGE.
7. EXISTING CAST-IN-PLACE KNOCKOUT WALL. APPLY 1" THICK EPOXY PATCHING MATERIAL TO SEAL JOINT ALONG SIDES AND BOTTOM (INFILL THE JOINT AROUND THE PERIMETER OF THE WALL, BOTH SIDES).

1 / C-502 SECTION
SCALE: 3/8"=1'-0"
C-503
C-505

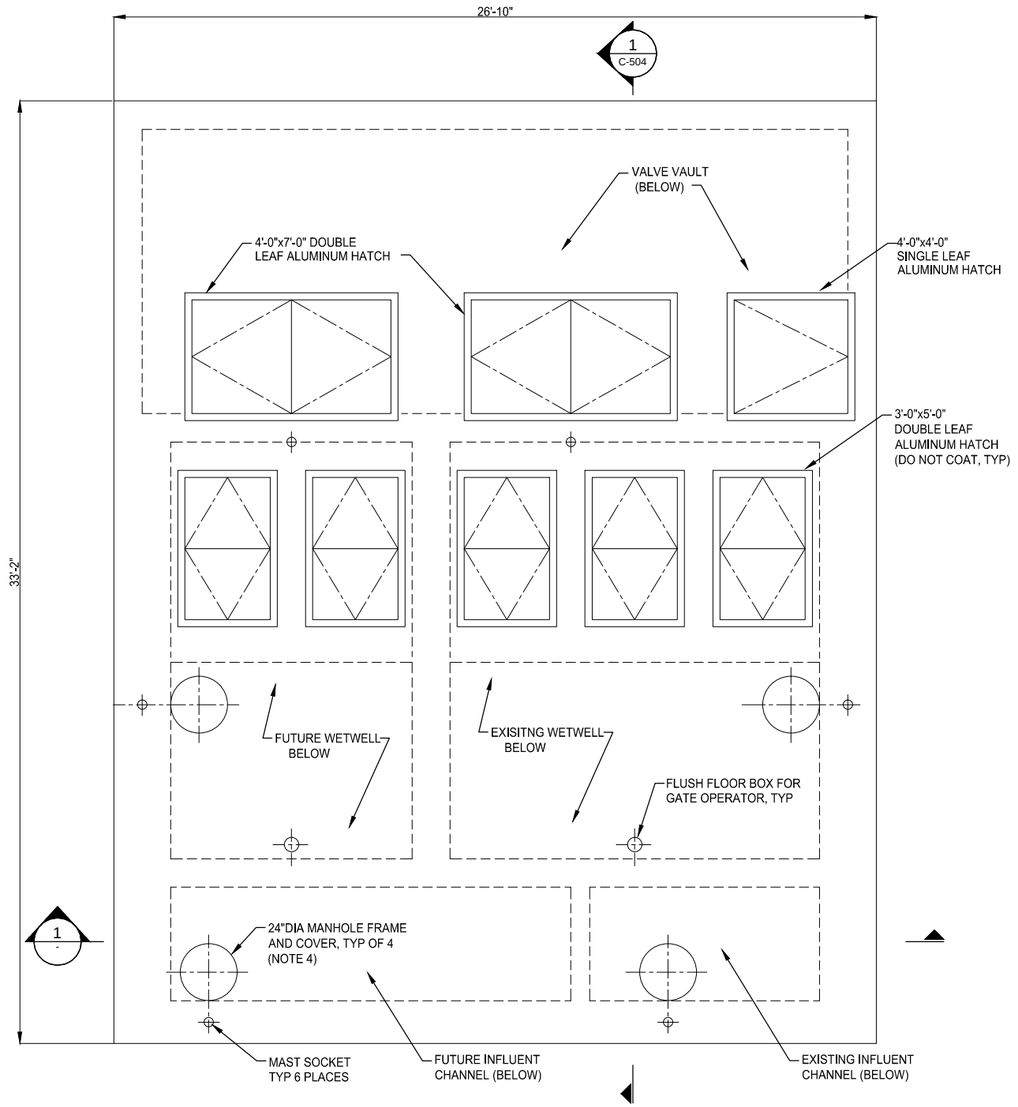

N

2 / – TOP PLAN (EXISTING)
SCALE: 3/8"=1'-0"

REV	DATE	DES	CHECK	APPROVALS	REVISION DESCRIPTION

DATE: 07-07-14	CIVIL REVIEW:
DESIGNED:	ARCH REVIEW:
DRAWN:	STRUC REVIEW:
CHECKED:	MECH REVIEW:
APPROVED:	

TETRA TECH
www.tetratech.com
1420 Fifth Avenue, Suite 600
Seattle, Washington 98101
Phone: 206-883-9300 Fax: 206-883-9301

BRUCE R. GRAVELLE, STATE OF WASHINGTON, 23364, REGISTERED PROFESSIONAL ENGINEER, 7-7-14

CITY OF FIFE
PS-10 REHABILITATION / PS-5 AND PS-6 WETWELL COATING
PS-5

COATING NOTES AND DETAILS 1

FILE NO:
PROJECT NO: 135-12584-14002
DWG NO: C-503
SHEET: OF

This drawing is full size when 22"x 34" or is reduced to half size when 11"x17"

COPYRIGHT 2010, TETRA TECH, ALL RIGHTS RESERVED

Path: P:\12584\135-12584-14002\CAD\SheetFiles\C-503 COATING NOTES AND DETAILS 1.dwg Plot date: Jul 08, 2014-12:43:14pm CAD User: jamie.carter
Xref Filename: 1 G-BS-22x34hz 1 GS-BRG-WA 1 _BRG-STG 1

J:\2930\39\FAB\02FAB\2001.dwg 6-11-01

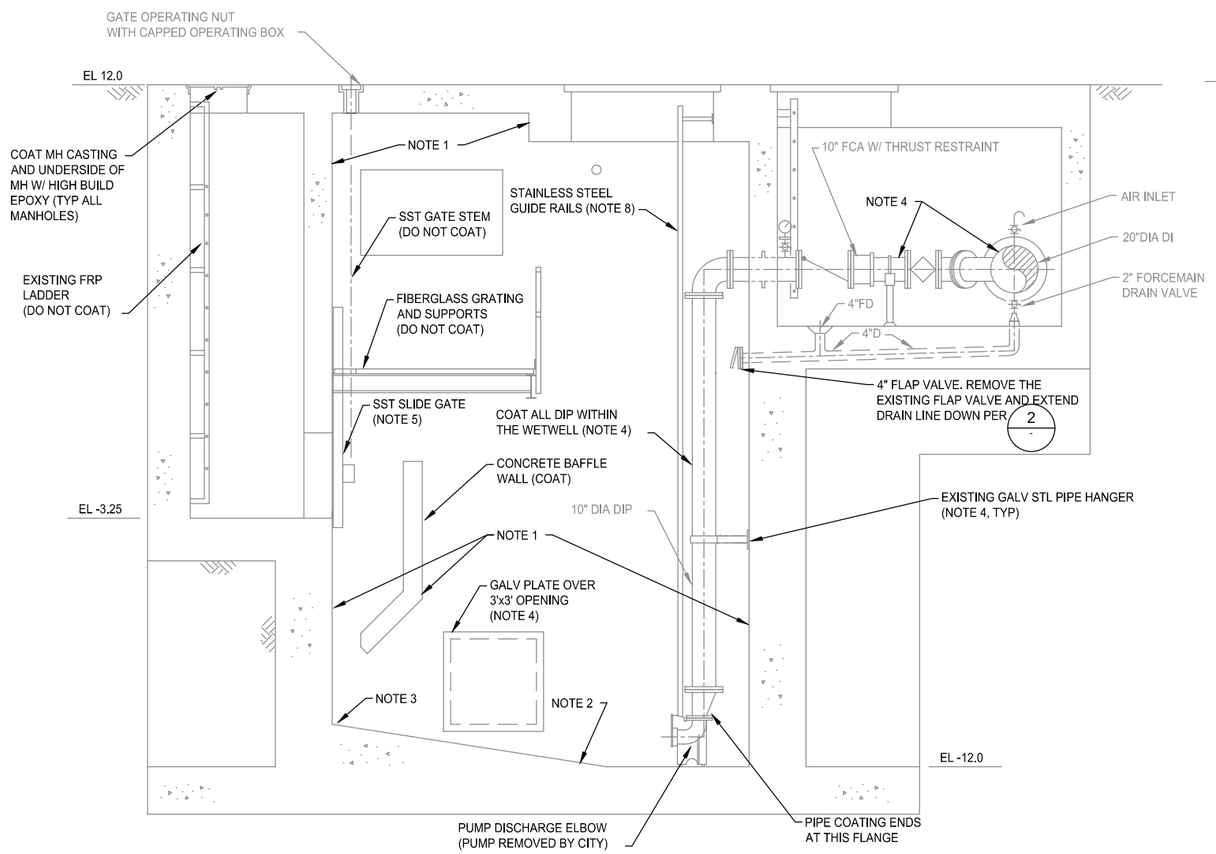

1 C-502 SECTION
SCALE: 3/8"=1'-0"
C-503
C-505

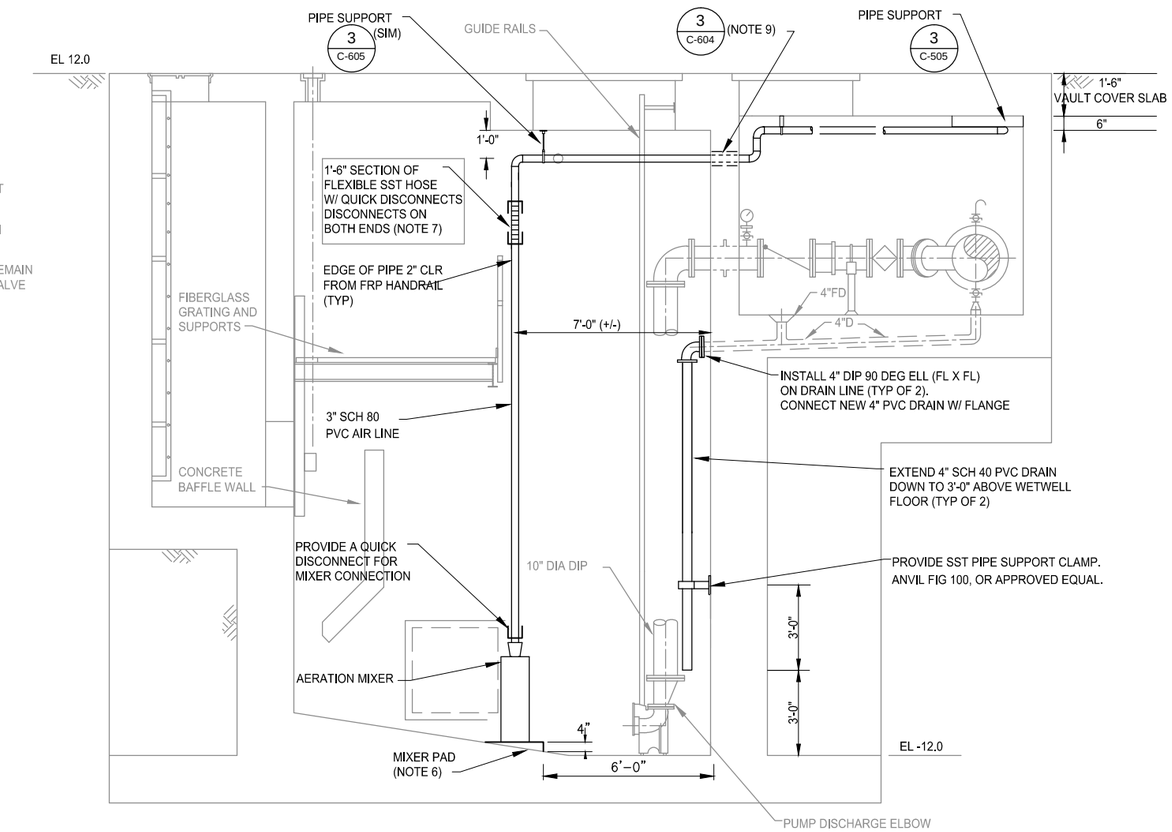

2 C-505 WETWELL IMPROVEMENTS SECTION
SCALE: 3/8"=1'-0"

NOTES:

1. REMOVE EXISTING POLYUREA COATING ON ALL CONCRETE SURFACES IN THE WETWELL AND APPLY NEW CONCRETE COATING IN ACCORDANCE WITH THE SPECIFICATIONS.
2. THE FLOOR OF THE WETWELL IS COATED WITH POLYUREA COATING WHICH IS TO BE REMOVED. DO NOT COAT THE FLOOR.
3. THE NEW CONCRETE COATING IS TO END AT THE TOP OF THE EXISTING CONCRETE FLOOR. SAW-CUT A 1/4" X 1/4" GROOVE WITHIN 6" FROM THE TOP OF THE CONCRETE FLOOR FOR THE TERMINATION OF THE COATING.
4. EXISTING FERROUS METALS IN THE WETWELL AND IN THE VALVE VAULT AS WELL AS THE METER VAULT ARE TO BE COATED WITH HIGH BUILD EPOXY IN ACCORDANCE WITH THE SPECIFICATIONS. SURFACE PREPARATION PER THE SPECIFICATIONS.
5. THIS SST SLIDE GATE IS TO BE REMOVED AND DELIVERED TO THE CITY FOR REPAIR, AND REINSTALLED AFTER REPAIR IS COMPLETED PER SPECIAL PROVISION 8-30.
6. THE TOP 1/2" OF THE EXISTING CONCRETE FLOOR IS TO BE REMOVED IN THE AREA OF THE MIXING PAD. THE MIXER PAD IS TO BE FORMED ON 3 SIDES, AND THE SPECIFIED CEMENT GROUT IS TO BE USED PER SPECIFICATION 15100.
7. SEE SPECIFICATION 11400 FOR THE FLEXIBLE SST HOSE. PROVIDE THREADED FEMALE SST QUICK DISCONNECTS ON BOTH ENDS. THE PVC PIPE FROM THE QD TO THE MIXER SHALL BE CUT TO A LENGTH SUCH THAT THE FLEXIBLE HOSE IS IN COMPRESSION WHEN INSTALLED. THE MIXER SHALL FULLY REST ON THE PAD, AND NOT BE SUPPORTED BY THE AIR PIPING.
8. THE GUIDE RAILS ARE TO BE PROTECTED FROM PAINT SPLATTER. MASK OR TEMPORARILY REMOVE THE GUIDE RAILS.
9. THE CORED OPENINGS IN THE WALL BETWEEN THE WETWELL AND THE VAULT ARE TO BE INSTALLED PRIOR TO THE CONCRETE COATING BEING APPLIED IN THE WETWELL.

REV	DATE	DES	CHECK	APPROVALS	REVISION DESCRIPTION

DATE: 07-07-14
DESIGNED:
DRAWN:
CHECKED:
APPROVED:
CIVIL REVIEW:
ARCH REVIEW:
STRUC REVIEW:
MECH REVIEW:

TETRA TECH
www.tetratech.com
1420 Fifth Avenue, Suite 600
Seattle, Washington 98101
Phone: 206-883-9300 Fax: 206-883-9301

BRUCE R. GRAVELLE — STATE OF WASHINGTON — 23364 — REGISTERED PROFESSIONAL ENGINEER — 7-7-14

CITY OF FIFE
PS-10 REHABILITATION / PS-5 AND PS-6 WETWELL COATING
PS-5

COATING NOTES AND DETAILS 2

FILE NO:
PROJECT NO: 135-12584-14002
DWG NO: C-504
SHEET: OF

COPYRIGHT 2010, TETRA TECH, ALL RIGHTS RESERVED

This drawing is full size when 22"x 34" or is reduced to half size when 11"x17"

Path: P:\12584\135-12584-14002\CAD\SheetFiles\C-504 COATING NOTES AND DETAILS 2.dwg Plot date: Jul 08, 2014-12:45:22pm CAD User: janie.carter.
Xref Filename: I FAB02000 I G-BS-22x34hz I GS-BRG-WA I _BRG-STG I

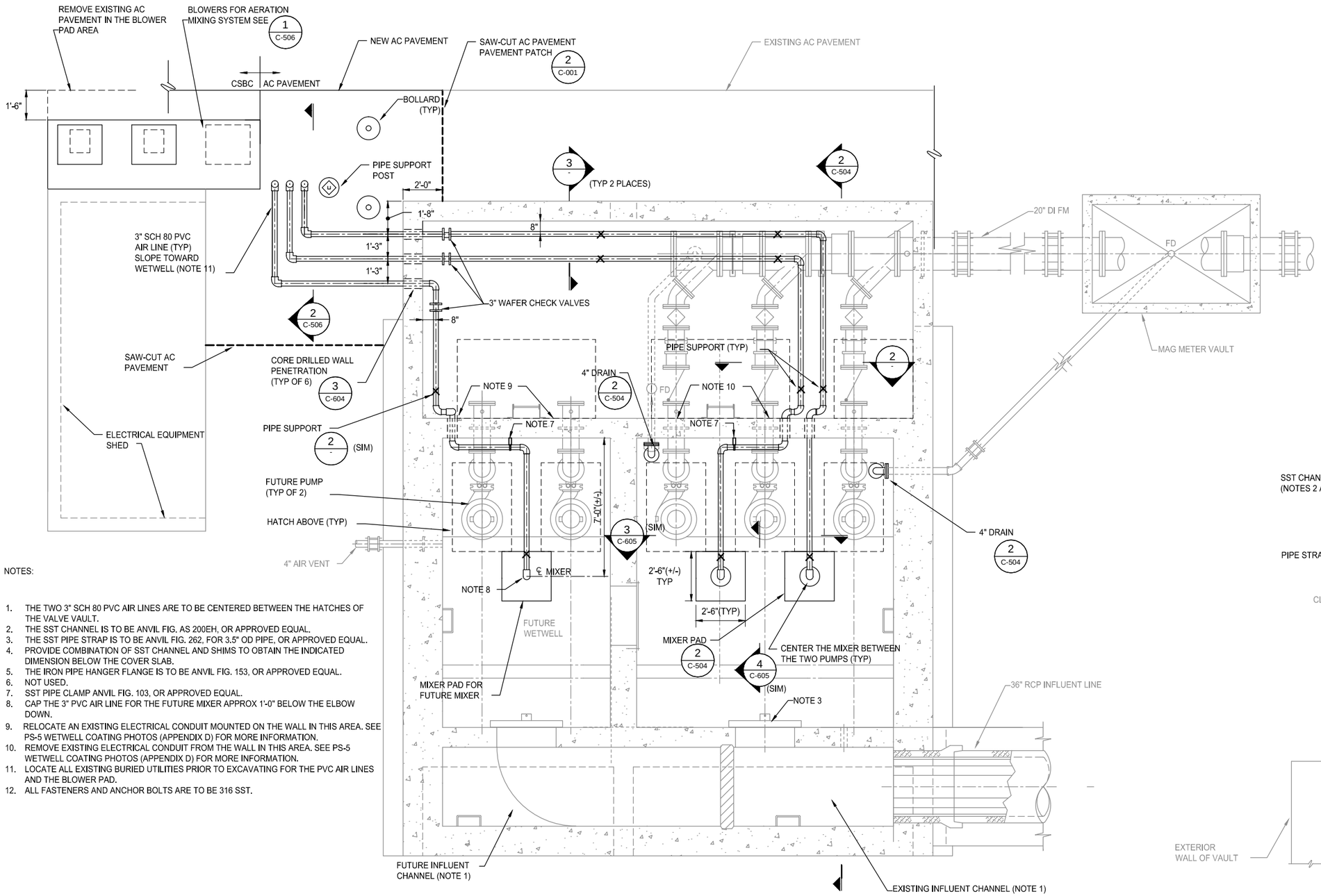

1 C-501 PLAN - PUMP STATION 5
SCALE: 3/8"=1'-0"

NOTES:

1. THE TWO 3" SCH 80 PVC AIR LINES ARE TO BE CENTERED BETWEEN THE HATCHES OF THE VALVE VAULT.
2. THE SST CHANNEL IS TO BE ANVIL FIG. AS 200EH, OR APPROVED EQUAL.
3. THE SST PIPE STRAP IS TO BE ANVIL FIG. 262, FOR 3.5" OD PIPE, OR APPROVED EQUAL.
4. PROVIDE COMBINATION OF SST CHANNEL AND SHIMS TO OBTAIN THE INDICATED DIMENSION BELOW THE COVER SLAB.
5. THE IRON PIPE HANGER FLANGE IS TO BE ANVIL FIG. 153, OR APPROVED EQUAL.
6. NOT USED.
7. SST PIPE CLAMP ANVIL FIG. 103, OR APPROVED EQUAL.
8. CAP THE 3" PVC AIR LINE FOR THE FUTURE MIXER APPROX 1'-0" BELOW THE ELBOW DOWN.
9. RELOCATE AN EXISTING ELECTRICAL CONDUIT MOUNTED ON THE WALL IN THIS AREA. SEE PS-5 WETWELL COATING PHOTOS (APPENDIX D) FOR MORE INFORMATION.
10. REMOVE EXISTING ELECTRICAL CONDUIT FROM THE WALL IN THIS AREA. SEE PS-5 WETWELL COATING PHOTOS (APPENDIX D) FOR MORE INFORMATION.
11. LOCATE ALL EXISTING BURIED UTILITIES PRIOR TO EXCAVATING FOR THE PVC AIR LINES AND THE BLOWER PAD.
12. ALL FASTENERS AND ANCHOR BOLTS ARE TO BE 316 SST.

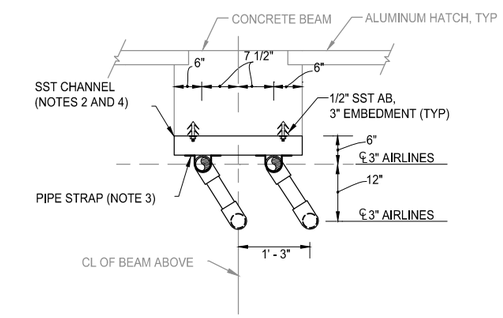

2 - SECTION
SCALE: 3/4"=1'-0"

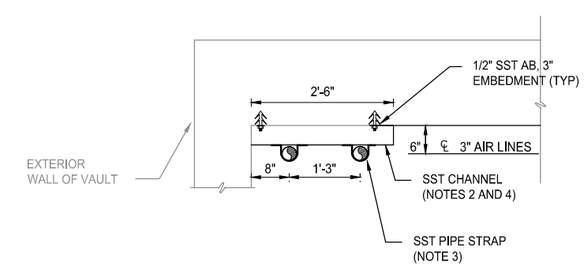

3 - SECTION
SCALE: 3/4"=1'-0"

REV	DATE	DES	CHECK	APPROVALS	REVISION DESCRIPTION

DATE: 07-07-14	CIVIL REVIEW:
DESIGNED:	ARCH REVIEW:
DRAWN:	STRUC REVIEW:
CHECKED:	MECH REVIEW:
APPROVED:	

TETRA TECH
www.tetratech.com
1420 Fifth Avenue, Suite 600
Seattle, Washington 98101
Phone: 206-883-9300 Fax: 206-883-9301

BRUCE R. GRAVELLE, STATE OF WASHINGTON, 23364, REGISTERED PROFESSIONAL ENGINEER, 7-7-14

CITY OF FIFE
PS-10 REHABILITATION / PS-5 AND PS-6 WETWELL COATING
PS-5

AERATION MIXER INSTALLATION

FILE NO:
PROJECT NO: 135-12584-14002
DWG NO: C-505
SHEET: OF

COPYRIGHT 2010, TETRA TECH, ALL RIGHTS RESERVED

This drawing is full size when 22"x 34" or is reduced to half size when 11"x17"

Path: P:\12584\135-12584-14002\CAD\SheetFiles\C-505 AERATION MIXER INSTALLATION.dwg Plot date: Jul 08, 2014-11:59:07am CAD User: jamecarter
Xref Filename: I G-BS-22x34hz I GS-BRG-WA I _BRG-SIG I
J:\2930073SFABOFSFAB\02001.dwg 6-11-01

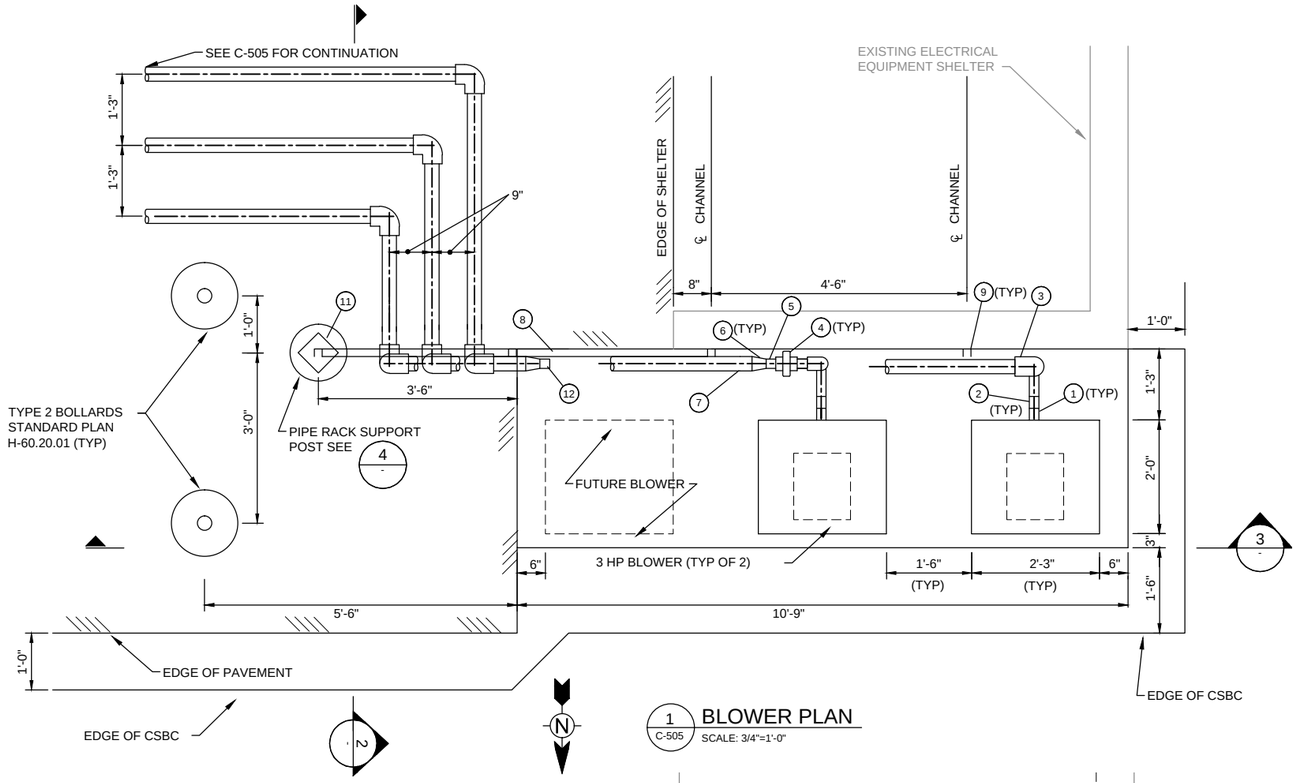

1 C-505 BLOWER PLAN
SCALE: 3/4"=1'-0"

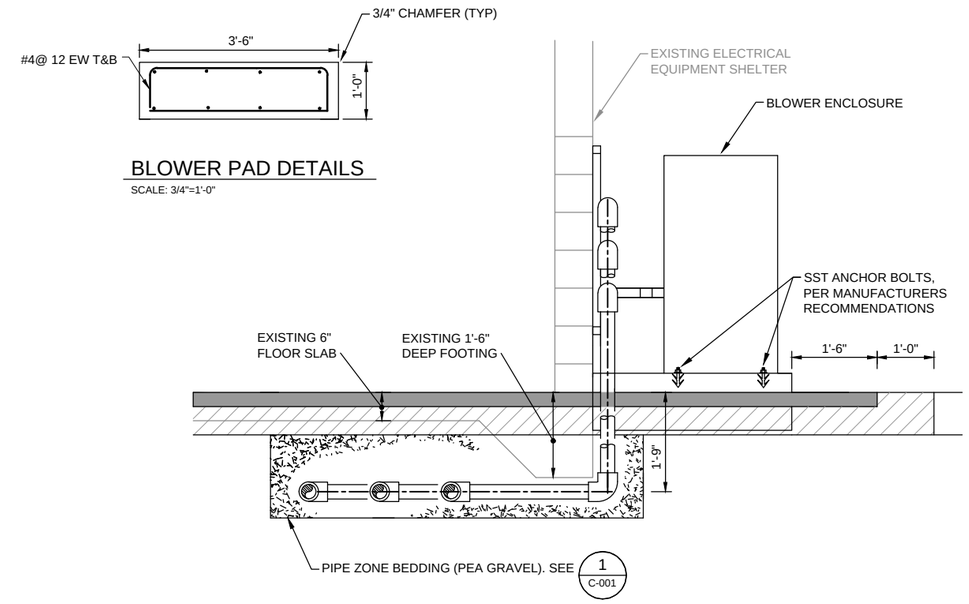

BLOWER PAD DETAILS
SCALE: 3/4"=1'-0"

2 SECTION
SCALE: 3/4"=1'-0"

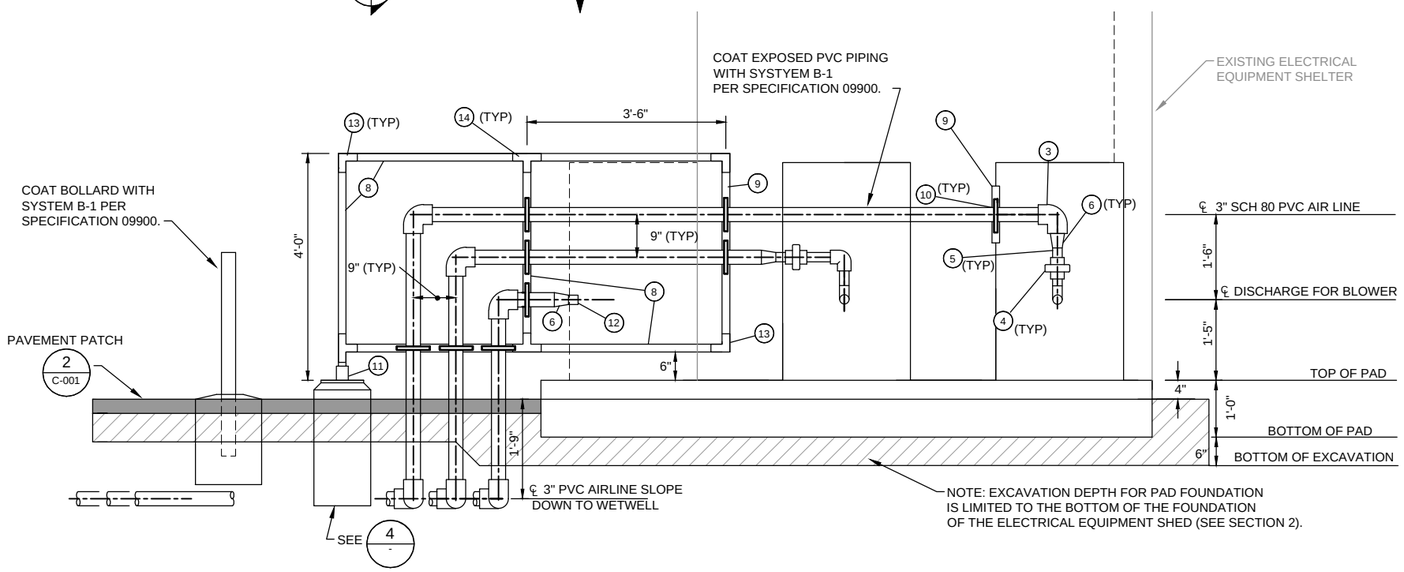

3 SECTION
SCALE: 3/4"=1'-0"

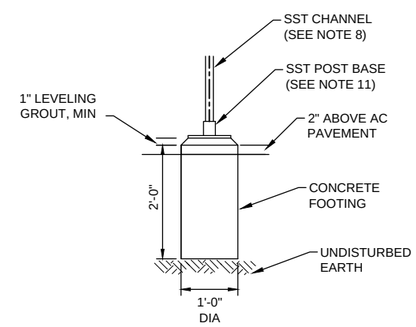

4 DETAIL
SCALE: 3/4"=1'-0"

NOTES:

1. 2" SST MALE THREAD ON BLOWER OUTLET.
2. 2" PVC ADAPTER (F THREAD x SOCKET).
3. 3" PVC 90° ELL (SOCKET x SOCKET).
4. 2" PVC UNION (SOCKET x SOCKET).
5. 2" PVC NIPPLE (M THREAD x PLAIN END).
6. 3"X2" PVC BUSHING (FTG x F THREAD).
7. 3" SCH 80 PVC SOCKET END.
8. SST CHANNEL, ANVIL AS 200 OR EQUAL (TYP FOR FREE-STANDING CHANNEL).
9. SST CHANNEL, ANVIL AS 200 EH OR EQUAL (TYP FOR CHANNEL MOUNTED TO WALL).
10. SST PIPE STRAP, ANVIL FIG 262, OR EQUAL.
11. SST POST BASE, ANVIL AS 3033, OR EQUAL.
12. INSTALL THREADED 2" PLUG IN 3"X2" BUSHING.
13. SST FOUR HOLE CORNER PLATE, ANVIL AS 719 OR EQUAL.
14. SST "T" PLATE, ANVIL AS 714 OR EQUAL.
15. ALL FASTENERS AND ANCHOR BOLTS ARE TO BE 316 SST.

REV	DATE	DES	CHECK	APPROVALS	REVISION DESCRIPTION

DATE: 01–25–14		CIVIL REVIEW:	
DESIGNED:		ARCH REVIEW:	
DRAWN:		STRUC REVIEW:	
CHECKED:		MECH REVIEW:	
APPROVED:			

This drawing is full size when 22"x 34" or is reduced to half size when 11"x17"

TETRA TECH
www.tetratech.com
1420 Fifth Avenue, Suite 600
Seattle, Washington 98101
Phone: 206-883-9300 Fax: 206-883-9301

BRUCE R. GRAVELLE
STATE OF WASHINGTON
23364
REGISTERED PROFESSIONAL ENGINEER
1-7-14

CITY OF FIFE
PS-10 REHABILITATION / PS-5 AND PS-6 WETWELL COATING
PS-5

AERATION MIXING DETAILS

FILE NO:	
PROJECT NO:	135–12584–14002
DWG NO:	C-506
SHEET:	OF

COPYRIGHT 2010, TETRA TECH, ALL RIGHTS RESERVED

Path: P:\12584\135-12584-14002\CAD\SheetFiles\C-506 AERATION MIXING DETAILS.dwg Plot date: Jul 09, 2014-12:12:28pm CAD User: jaime.carter.
Xref Filename: | GS-BRG-WA | _BRG-SIG |

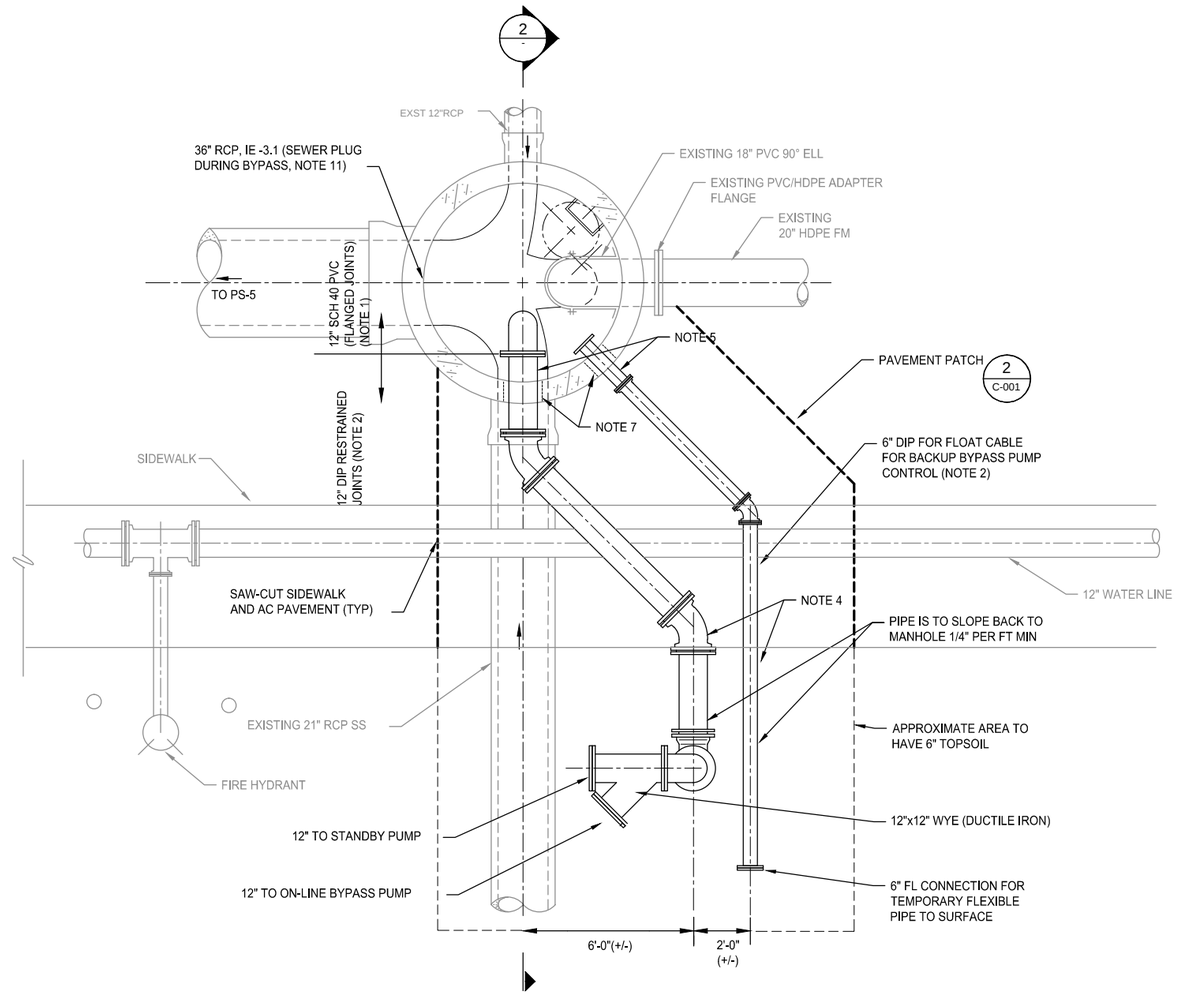

1 C-501 BYPASS PIPING PLAN
SCALE: 3/8"=1'-0"

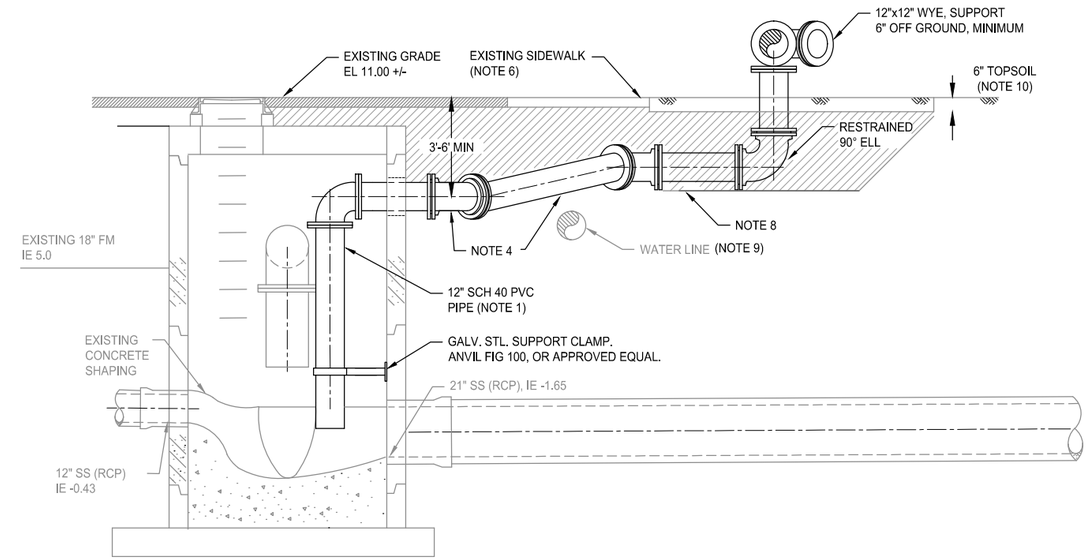

2 – SECTION
SCALE: 3/8"=1'-0"

NOTES:

1. REMOVE THE PVC BYPASS PIPE FROM THE MANHOLE AT THE COMPLETION OF THE COATING REHABILITATION PROJECT..
2. RESTRAINED JOINTS FOR THE 12" DIP SHALL BE A BOLTED SYSTEM PER SECTION 15085 OF THE CONTRACT SPECIFICATIONS. THE 6" DIP JOINTS DO NOT REQUIRE RESTRAINT.
3. REFER TO PIPE SCHEDULE, DWG C-001, FOR DIP DETAILS.
4. AFTER THE SEWAGE BYPASS IS COMPLETED, REMOVE ALL 6" AND 12" DIP PIPE. INSTALL DIP CAP OR PLUG ON PE OF WALL SPOOLS. ALL BACKFILL IN THE ROADWAY AND SIDEWALK AREAS TO BE CSBC MEETING SECTION 9-03.9(3) OF THE STANDARD SPECIFICATIONS.
5. THE DUCTILE IRON WALL SPOOLS (FL X PE) ARE TO BE LEFT IN PLACE AT THE COMPLETION OF THE COATING REHABILITATION PROJECT. INSTALL PVC BLIND FLANGES ON THE DIP WALL SPOOLS INSIDE THE MANHOLE AND DIP PLUGS ON THE EXTERIOR SIDE OF THE SPOOLS.
6. RESTORE SIDEWALK PER THE STANDARD SPECIFICATIONS AND STANDARD PLAN F-30, 10-01.
7. CORE DRILL 16" DIA OPENING FOR 12" PIPE AND 10" DIA OPENING FOR 6" PIPE. INSTALL MECHANICAL SEAL AND GROUT INTERIOR FACE OF MANHOLE. SEE DET 3, DWG C-604.
8. ALL TRENCH BACKFILL IS TO BE CSBC.
9. THE LOCATIONS SHOWN FOR THE EXISTING WATER LINE AND OTHER EXISTING UTILITIES ARE APPROXIMATE. THE CONTRACTOR IS TO LOCATE ALL BURIED UTILITIES PRIOR TO EXCAVATING.
10. AFTER THE BYPASS PIPING HAS BEEN REMOVED, PROVIDE 6" TOPSOIL OVER BACKFILLED AREAS SOUTH OF SIDEWALK.
11. THE SEWER PLUG IS TO HAVE AN 8" DIAMETER THROUGH PIPE, WITH A CAP TO PREVENT SEWAGE FROM ENTERING THE 36" RCP INFLUENT LINE. THIS CONNECTION MAY BE USED IF THE CITY DECIDES TO INSTALL A CIPP IN THE INFLUENT LINE PER BID ALTERNATIVE 1A, PER THE SPECIAL PROVISION 8-32.

REV	DATE	DES	CHECK	APPROVALS	REVISION DESCRIPTION

DATE: 07–07–14	CIVIL REVIEW:
DESIGNED:	ARCH REVIEW:
DRAWN:	STRUC REVIEW:
CHECKED:	MECH REVIEW:
APPROVED:	

This drawing is full size when 22"x 34" or is reduced to half size when 11"x17"

TETRA TECH
www.tetratech.com
1420 Fifth Avenue, Suite 600
Seattle, Washington 98101
Phone: 206-883-9300 Fax: 206-883-9301

BRUCE R. GRAVELEY, STATE OF WASHINGTON, 23364, REGISTERED PROFESSIONAL ENGINEER, 7-7-14

CITY OF FIFE
PS-10 REHABILITATION / PS-5 AND PS-6 WETWELL COATING
PS-5

BYPASS PUMPING DETAILS

FILE NO:
PROJECT NO: 135–12584–14002
DWG NO: C-507
SHEET: OF

COPYRIGHT 2010, TETRA TECH, ALL RIGHTS RESERVED

Path: P:\12584\135-12584-14002\CAD\SheetFiles\C-507 BYPASS PUMPING DETAILS.dwg Plot date: Jul 07, 2014-03:38:19pm CAD User: janiecarter
Xref Filename: | G-BS-22x34hz | GS-BRG-VA 1_BRG-SIG |

J:\29300739\PA802\PA802\001.dwg 6-11-01

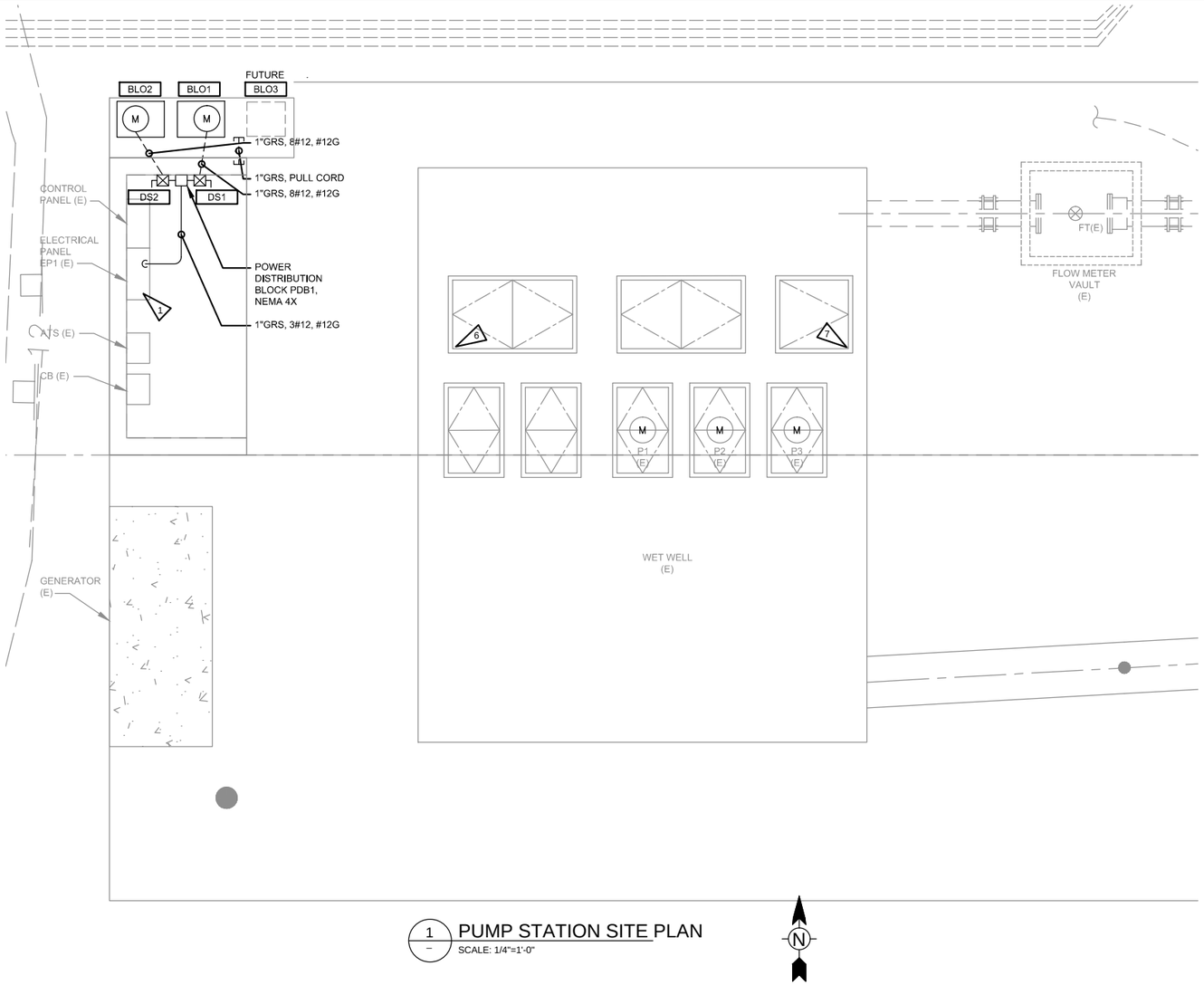

1 PUMP STATION SITE PLAN
SCALE: 1/4"=1'-0"

NOTES:

1. UTILIZE EXISTING SPARE 20 AMP 3 POLE, 480 VAC CIRCUIT BREAKER IN EXISTING ELECTRICAL PANEL TO POWER TWO NEW BLOWERS. PROVIDE CONDUIT TO DISCONNECT SWITCH LOCATION ON SHELTER WALL. PROVIDE POWER DISTRIBUTION BLOCK IN NEMA 3R ENCLOSURE AND TWO NEW FUSED DISCONNECT SWITCHES. PROVIDE CONDUIT AND WIRE TO PACKAGED BLOWER UNITS AND CONNECT PER MANUFACTURER'S LITERATURE, REQUIREMENTS, AND RECOMMENDATIONS. BLOWER UNITS SHALL BE PER SPECIFICATION SECTION 11400. BLOWER UNITS INCLUDE INTERNALLY PRE WIRED CONTROLS. SEE ELECTRICAL PANEL DRAWINGS IN O&M MANUAL FOR ADDITIONAL INFORMATION ON EXISTING ELECTRICAL PANEL. FURNISH 3 SPARE FUSES.
2. NOT USED.
3. FUSE SIZE AND TYPE PER BLOWER MANUFACTURERS RECOMMENDATION.
4. BLOWER UNITS SHALL BE PER SPECIFICATION SECTION 11400.
5. PROVIDE STARTER WITH 120VAC COIL. COORDINATE AND INSTALL STARTER AND OZONE GENERATOR CONTROLS WITH BLOWER PACKAGE.
6. RELOCATE EXISTING ELECTRICAL CONDUIT IN THIS AREA FOR THE INSTALLATION OF THE 3" PVC AIR LINES. SEE PS-5 WET WELL COATING PHOTOS, APPENDIX D, VOLUME 1.
7. REMOVE EXISTING ELECTRICAL CONDUIT IN THIS AREA. SEE PS-5 WET WELL COATING PHOTOS, APPENDIX D, VOLUME 1.

REFERENCE DOCUMENTS
1. ELECTRICAL PANEL SHOP DRAWINGS IN CITY PROVIDED O&M MANUALS
2. PUMP STATION ELECTRICAL PLAN DRAWINGS IN CITY PROVIDED O&M MANUALS

PUMP STATION 5 LOAD CALCULATION			175 AMP SERVICE		150 AMP GENERATOR	
480 VAC, 3-P, 4-W	**HP/KVA**	**AMPS**	**UTILITY DEMAND FACTOR**	**UTILITY DEMAND AMPS**	**GENERATOR DEMAND FACTOR**	**GENERATOR DEMAND AMPS**
PUMP P1	40 HP	52	1.25	65.00	1.25	65
PUMP P2	40 HP	52	1	52	1	52
PUMP P3	40 HP	52	0	0	0	0
TRANSFORMER 1 PHASE	7.5 KVA	15.63	1	15.63	0.75	11.72
BLOWER BLO1	3 HP	4.8	1	4.8	1	4.8
BLOWER BLO2	3 HP	4.8	1	4.8	1	4.8
DEMAND				142.23		138.32

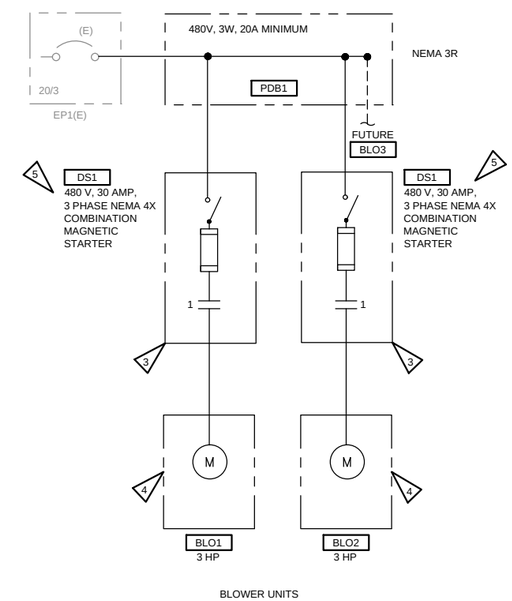

PARTIAL ONE LINE DIAGRAM
SCALE: NONE

REV	DATE	DES	CHECK	APPROVALS	REVISION DESCRIPTION

DATE: 07-07-14
DESIGNED:
DRAWN:
CHECKED:
APPROVED:
CIVIL REVIEW:
ARCH REVIEW:
STRUC REVIEW:
MECH REVIEW:

This drawing is full size when 22"x 34" or is reduced to half size when 11"x17"

TETRA TECH
www.tetratech.com
1420 Fifth Avenue, Suite 600
Seattle, Washington 98101
Phone: 206-883-9300 Fax: 206-883-9301

RANDY FRITCHEY STATE OF WASHINGTON 39949 REGISTERED PROFESSIONAL ENGINEER 7-7-14

CITY OF FIFE
PS-10 REHABILITATION / PS-5 AND PS-6 WETWELL COATING
PS-5

AERATION BLOWER ELECTRICAL

FILE NO:
PROJECT NO: 135-12584-14002
DWG NO: E-501
SHEET: OF

COPYRIGHT 2010, TETRA TECH, ALL RIGHTS RESERVED

Path: P:\12584\135-12584-14001\CAD\SheetFiles\E-501.dwg Plot date: Jul 07, 2014-03:58:26pm CAD User: jamie.carter.
Xref Filename: | G-BS-26x34hz | FAB01X01 (C501) | FAB01X06 (C501) | FAB01X05(C501) | GS-RF-WA | _RF-STG |
J:\2930073\FAB02\FAB02D34 xref:FAB01X01, FAB01X05, FAB01X06 6-11-01

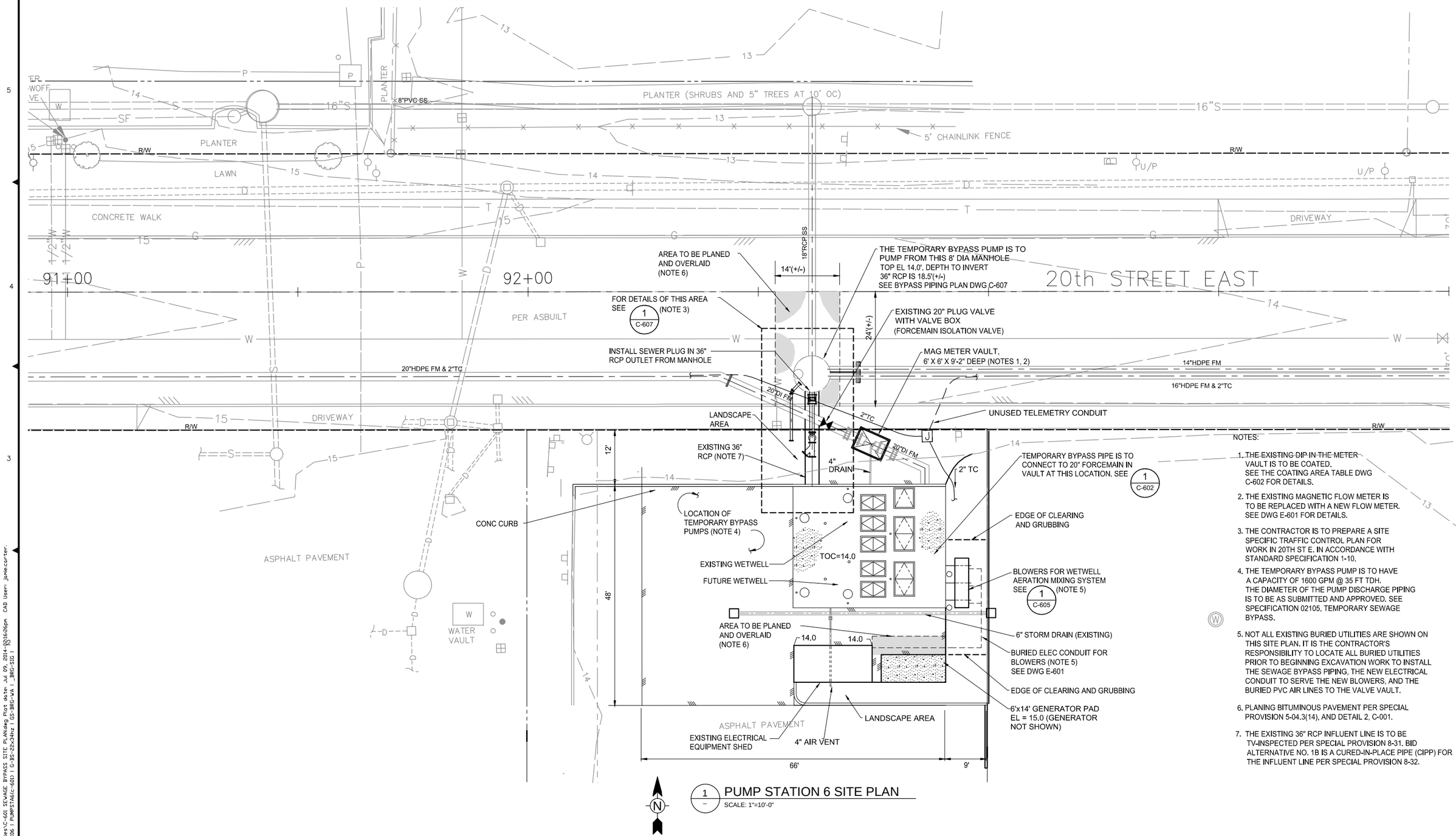

1 PUMP STATION 6 SITE PLAN
SCALE: 1"=10'-0"

NOTES:

1. THE EXISTING DIP IN THE METER VAULT IS TO BE COATED. SEE THE COATING AREA TABLE DWG C-602 FOR DETAILS.
2. THE EXISTING MAGNETIC FLOW METER IS TO BE REPLACED WITH A NEW FLOW METER. SEE DWG E-601 FOR DETAILS.
3. THE CONTRACTOR IS TO PREPARE A SITE SPECIFIC TRAFFIC CONTROL PLAN FOR WORK IN 20TH ST E. IN ACCORDANCE WITH STANDARD SPECIFICATION 1-10.
4. THE TEMPORARY BYPASS PUMP IS TO HAVE A CAPACITY OF 1600 GPM @ 35 FT TDH. THE DIAMETER OF THE PUMP DISCHARGE PIPING IS TO BE AS SUBMITTED AND APPROVED. SEE SPECIFICATION 02105, TEMPORARY SEWAGE BYPASS.
5. NOT ALL EXISTING BURIED UTILITIES ARE SHOWN ON THIS SITE PLAN. IT IS THE CONTRACTOR'S RESPONSIBILITY TO LOCATE ALL BURIED UTILITIES PRIOR TO BEGINNING EXCAVATION WORK TO INSTALL THE SEWAGE BYPASS PIPING, THE NEW ELECTRICAL CONDUIT TO SERVE THE NEW BLOWERS, AND THE BURIED PVC AIR LINES TO THE VALVE VAULT.
6. PLANING BITUMINOUS PAVEMENT PER SPECIAL PROVISION 5-04.3(14), AND DETAIL 2, C-001.
7. THE EXISTING 36" RCP INFLUENT LINE IS TO BE TV-INSPECTED PER SPECIAL PROVISION 8-31. BID ALTERNATIVE NO. 1B IS A CURED-IN-PLACE PIPE (CIPP) FOR THE INFLUENT LINE PER SPECIAL PROVISION 8-32.

REV	DATE	DES	CHECK	APPROVALS	REVISION DESCRIPTION

DATE: 07-07-14
DESIGNED:
DRAWN:
CHECKED:
APPROVED:
CIVIL REVIEW:
ARCH REVIEW:
STRUC REVIEW:
MECH REVIEW:

TETRA TECH
www.tetratech.com
1420 Fifth Avenue, Suite 600
Seattle, Washington 98101
Phone: 206-883-9300 Fax: 206-883-9301

BRUCE R. GRAVES, STATE OF WASHINGTON, 23364, REGISTERED PROFESSIONAL ENGINEER, 7-7-14

CITY OF FIFE
PS-10 REHABILITATION / PS-5 AND PS-6 WETWELL COATING
PS-6

SEWAGE BYPASS SITE PLAN

FILE NO:
PROJECT NO: 135-12584-14002
DWG NO: C-601
SHEET: OF

This drawing is full size when 22"x 34" or is reduced to half size when 11"x17"

COPYRIGHT 2010, TETRA TECH, ALL RIGHTS RESERVED

Path: P:\12584\135-12584-14002\CAD\SheetFiles\C-601 SEWAGE BYPASS SITE PLAN.dwg Plot date: Jul 09, 2014-12:16:26pm CAD User: janie.carter.
Xref Filename: | FAB01X01 | FAB01X02 | PUMPSTA&C-601) | G-BS-25x34hz | GS-BRG-VA | _BRG-SIG |

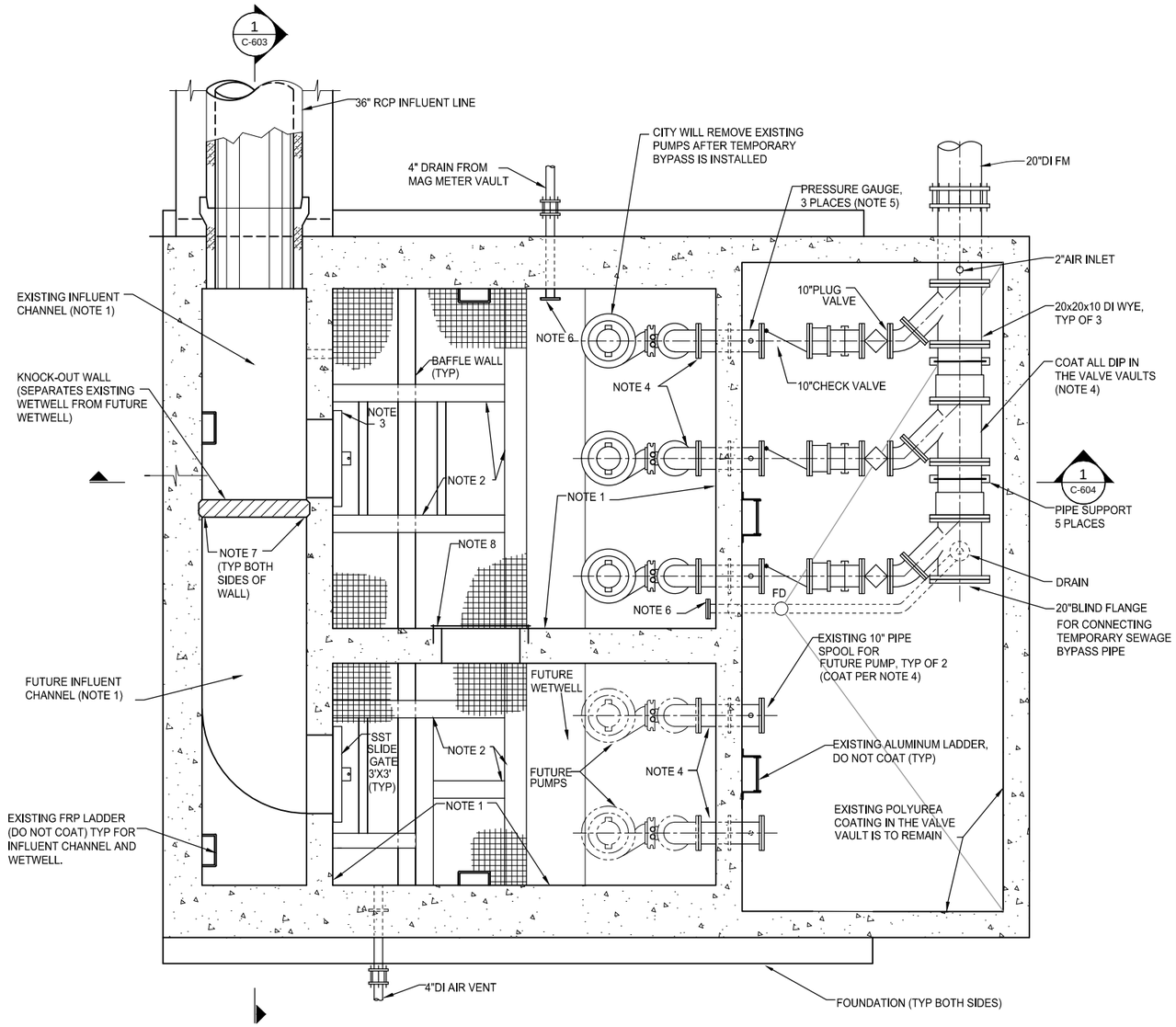

PLAN
PUMP STATION 6 (EXISTING)

1 / C-601 — SCALE: 3/8"=1'-0"

NOTES:

1. REMOVE EXISTING POLYUREA COATING ON ALL CONCRETE SURFACES IN THE WETWELL AND THE INFLUENT CHANNEL AND APPLY NEW CONCRETE COATING IN ACCORDANCE WITH THE SPECIFICATIONS.
2. EXISTING FRP BEAMS FOR GRATING PLATFORM (DO NOT COAT).
3. THIS SST SLIDE GATE IS TO BE REMOVED AND DELIVERED TO THE CITY FOR REPAIR, AND REINSTALLED AFTER REPAIR IS COMPLETED PER THE SPECIFICATIONS.
4. EXISTING FERROUS METALS IN THE WETWELL AND IN THE VALVE VAULT AS WELL AS THE METER VAULT ARE TO BE COATED WITH HIGH BUILD EPOXY IN ACCORDANCE WITH THE SPECIFICATIONS. SURFACE PREPARATION PER THE SPECIFICATIONS.
5. MASK THE PRESSURE GAUGE UNTIL COATING OF VAULT PIPING IS COMPLETED.
6. THE EXISTING DRAINS FROM THE VAULTS ARE TO BE MODIFIED PER SECTION 2, DWG C604.
7. EXISTING CAST-IN-PLACE KNOCKOUT WALL. APPLY 1" THICK EPOXY PATCHING MATERIAL TO SEAL JOINT ALONG SIDES AND BOTTOM (INFILL THE JOINT AROUND THE PERIMETER OF THE WALL, BOTH SIDES).
8. COAT THE GALVANIZED STEEL PLATE OVER THE 3' X 3' OPENING IN DIVIDER WALL. OPENING IS NEAR THE WETWELL FLOOR.

PS-6 - COATING SCHEDULE			
CONCRETE SURFACES TO BE COATED	AREA(SF)	SYSTEM	COMMENTS
ACTIVE WETWELL			
INFLUENT CHANNEL WALLS	407	A-3a, FIBER REINFORCED EPOXY OR A-3b ALTERNATIVE POLYURETHANE	SURFACE PREPARATION: PER SSPC - SP 13. SEE COATING SYSTEM REQUIREMENTS
INFLUENT CHANNEL FLOOR	32		
INFLUENT CHANNEL CEILING AND MANHOLE RISER	32		
WETWELL WALLS	1,392		
WETWELL CEILING, HATCH AND MANHOLE RISERS	261		
INFLUENT BAFFLE WALL	200		
WALL OPENINGS	40		
FUTURE WETWELL			
INFLUENT CHANNEL WALLS	624		
INFLUENT CHANNEL FLOOR	56		
INFLUENT CHANNEL CEILING AND MANHOLE RISER	56		
WETWELL WALLS	1,186		
WETWELL CEILING, HATCH AND MANOLE RISERS	173		
INFLUENT BAFFLE WALL	130		
WALL OPENING	12		
TOTAL CONCRETE COATING	4,601		
METAL SURFACES TO BE COATED	AREA(SF)	SYSTEM	COMMENTS
WETWELL		A-1 HIGH BUILD EPOXY	PIPE COATING AREA INCREASED BY 20% TO ACCOUNT FOR FLANGES AND MISCELLANEOUS PIPE SUPPORTS. SURFACE PREPARATION: SEE SPECIFICATION
10" DIA PUMP DISCHARGE LINES (DUCTILE IRON)	178		
MISCELLANEOUS DUCTILE IRON WALL SPOOLS FOR 10" AND 4" PIPE	8		
UNDERSIDE OF MANHOLE COVER AND FRAME	20		
GALVANIZED STEEL PLATE OVER 3' X 3' OPENING	12		
SUBTOTAL SYSTEM A-1	218		
VALVE VAULT		A-2 HIGH BUILD EPOXY	
10" DIA DISCHARGE LINES (DUCTILE IRON), WITH CHECK VALVES, PLUG VALVES, AND FITTINGS	76		
20" DIA HEADER (DUCTILE IRON).	76		
GALVANIZED METAL PIPE STANDS AND 2" DIA GALVANIZED DRAIN PIPE	12		
METER VAULT			
20" DIA FORCEMAIN (DUCTILE IRON), WITH METER	41		
SUBTOTAL SYSTEM A-2	205		
EXPOSED PVC AERATION PIPING	5	B-1 POLYURETHANE	SEE COATING SYSTEM REQUIREMENTS

REV	DATE	DES	CHECK	APPROVALS	REVISION DESCRIPTION

This drawing is full size when 22"x 34" or is reduced to half size when 11"x17"

DATE: 07-07-14 | CIVIL REVIEW:
DESIGNED: | ARCH REVIEW:
DRAWN: | STRUC REVIEW:
CHECKED: | MECH REVIEW:
APPROVED:

TETRA TECH
www.tetratech.com
1420 Fifth Avenue, Suite 600
Seattle, Washington 98101
Phone: 206-883-9300 Fax: 206-883-9301

BRUCE R. GRAVELLE — STATE OF WASHINGTON — 23364 — REGISTERED PROFESSIONAL ENGINEER — 7-7-14

CITY OF FIFE
PS-10 REHABILITATION / PS-5 AND PS-6 WETWELL COATING
PS-6

COATING NOTES AND AREA CALCULATIONS

FILE NO:
PROJECT NO: 135-12584-14002
DWG NO: C-602
SHEET: OF

COPYRIGHT 2010, TETRA TECH, ALL RIGHTS RESERVED

Path: P:\12584\135-12584-14002\CAD\SheetFiles\C-602 COATING NOTES AND AREA CALCULATIONS.dwg Plot date: Jul 08, 2014-12:18:02pm CAD User: jamie.carter.
Xref Filename: 1 FAB02008 1 G-BS-22x34hz 1 GS-BRG-VA 1 _BRG-STG 1

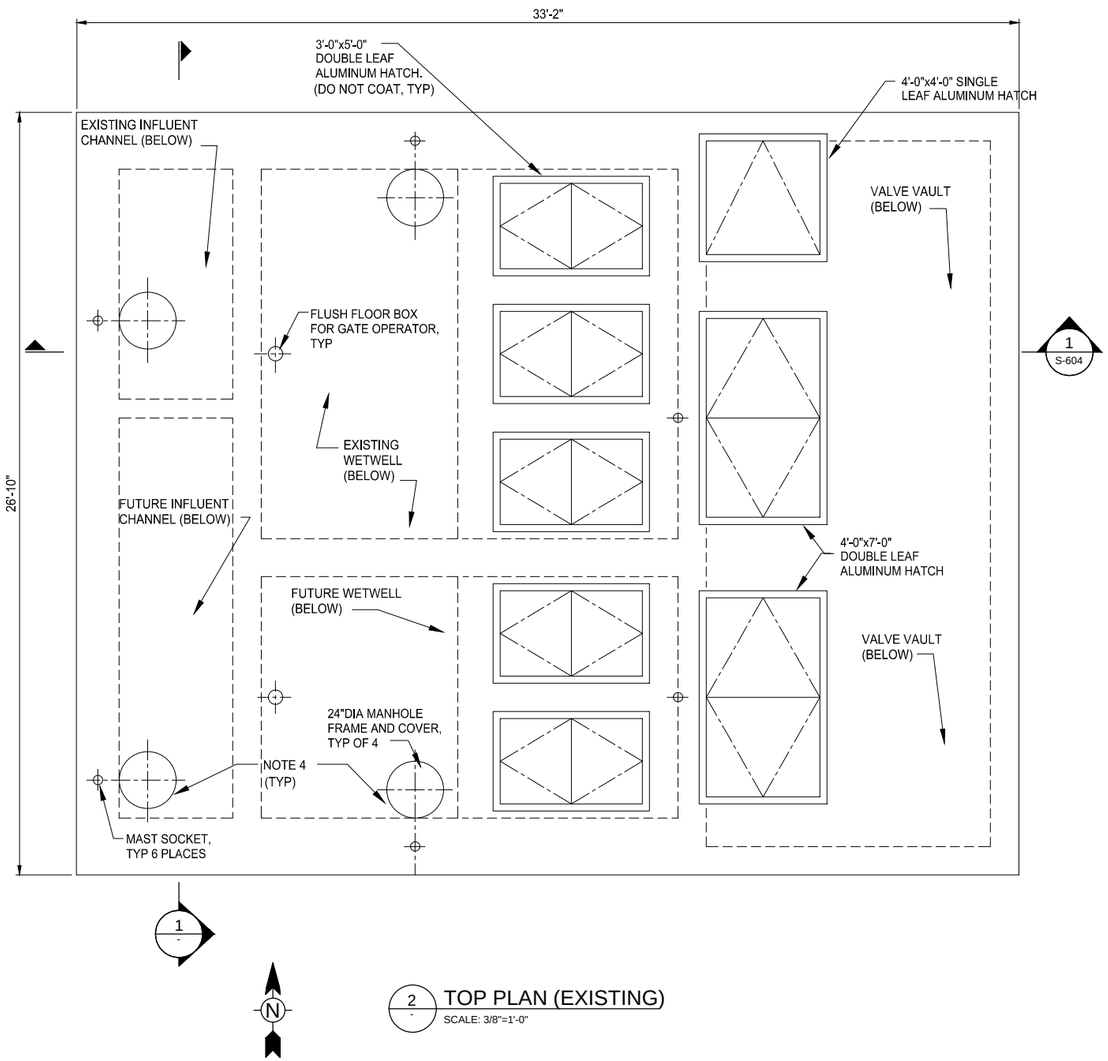

2 TOP PLAN (EXISTING)
SCALE: 3/8"=1'-0"

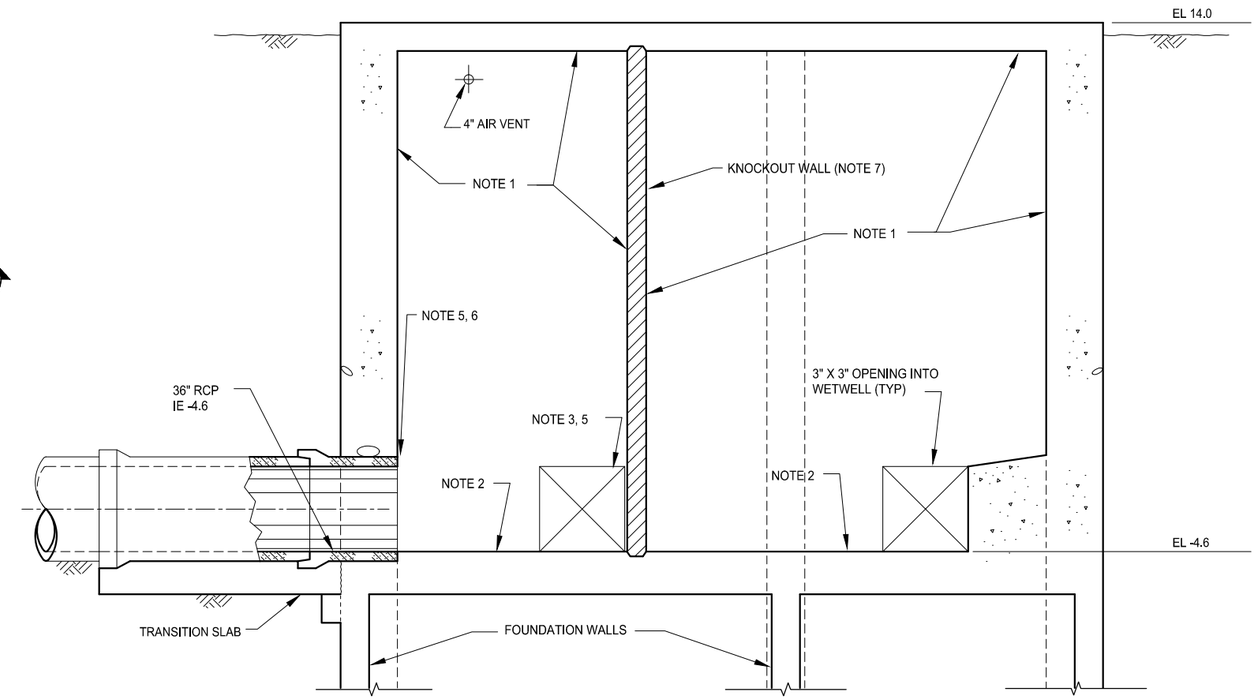

1 SECTION (EXISTING)
C-602, C-603
SCALE: 3/8"=1'-0"

1. REMOVE EXISTING POLYUREA COATING ON ALL CONCRETE SURFACES IN THE WETWELL AND APPLY NEW CONCRETE COATING IN ACCORDANCE WITH THE SPECIFICATIONS.
2. THE FLOOR OF THE INFLUENT CHANNEL IS COATED WITH POLYUREA COATING WHICH IS TO BE REMOVED AND REPLACED WITH NEW CONCRETE COATING.
3. THE SST SLIDE GATE ON THE OPPOSITE OF THIS 3' X 3' OPENING INTO THE WETWELL IS TO BE REMOVED AND DELIVERED TO THE CITY FOR REPAIR AND REINSTALLED AFTER REPAIR IS COMPLETED.
4. COAT MANHOLE CASTINGS AND UNDERSIDE OF LIDS WITH HIGH-BUILD EPOXY IN ACCORDANCE WITH THE SPECIFICATIONS. WHITE METAL BLAST CLEANED (SSPC-SP5)
5. CONCRETE REPAIR IS TO BE COMPLETED UNDER FORCE ACCOUNT PER THE SPECIFICATIONS.
6. THE CONCRETE NEAR THE DISCHARGE OF THE 36" INFLUENT LINE HAS SIGNIFICANT CONCRETE CORROSION DAMAGE.
7. EXISTING CAST-IN-PLACE KNOCKOUT WALL. APPLY 1" THICK EPOXY PATCHING MATERIAL TO SEAL JOINT ALONG SIDES AND BOTTOM (INFILL THE JOINT AROUND THE PERIMETER OF THE WALL, BOTH SIDES)

REV	DATE	DES	CHECK	APPROVALS	REVISION DESCRIPTION

This drawing is full size when 22"x 34" or is reduced to half size when 11"x17"

DATE: 07-07-14	CIVIL REVIEW:
DESIGNED:	ARCH REVIEW:
DRAWN:	STRUC REVIEW:
CHECKED:	MECH REVIEW:
APPROVED:	

TETRA TECH
www.tetratech.com
1420 Fifth Avenue, Suite 600
Seattle, Washington 98101
Phone: 206-883-9300 Fax: 206-883-9301

BRUCE R. GRAVELLE, STATE OF WASHINGTON, 23364, REGISTERED PROFESSIONAL ENGINEER, 7-7-14

CITY OF FIFE
PS-10 REHABILITATION / PS-5 AND PS-6 WETWELL COATING
PS-6

COATING NOTES AND DETAILS 1

FILE NO:	
PROJECT NO:	135-12584-14002
DWG NO:	C-603
SHEET:	OF

COPYRIGHT 2010, TETRA TECH, ALL RIGHTS RESERVED

Path: P:\12584\135-12584-14002\CAD\SheetFiles\C-603 COATING NOTES AND DETAILS 1.dwg Plot date: Jul 07, 2014-03:59:00pm CAD User: jamie.carter.
Xref Filename: 1 G-BS-22x34hz 1 GS-BRG-VA 1 _BRG-SIG 1

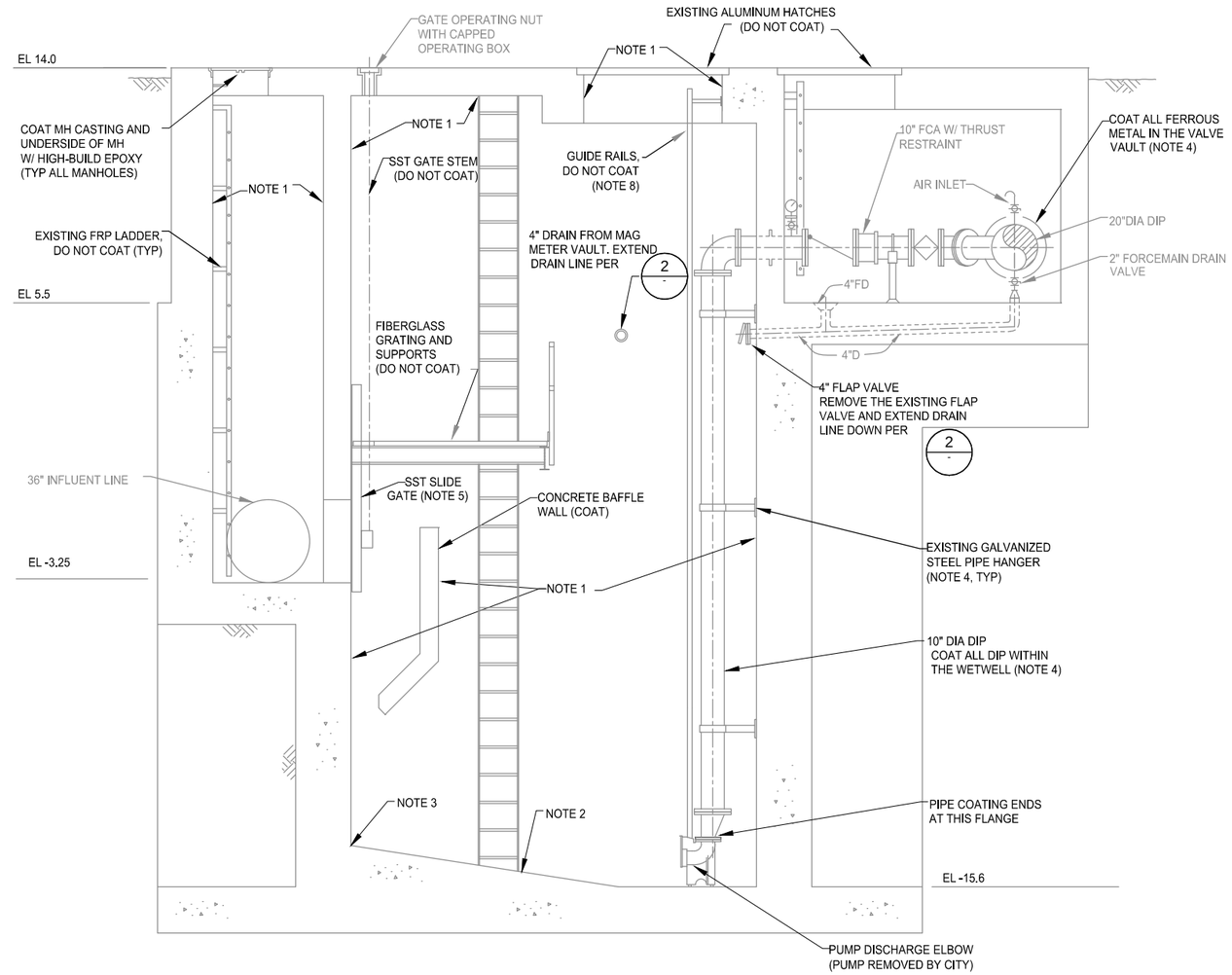

1 C-602 C-603 SECTION (EXISTING)
SCALE: 3/8"=1'-0"

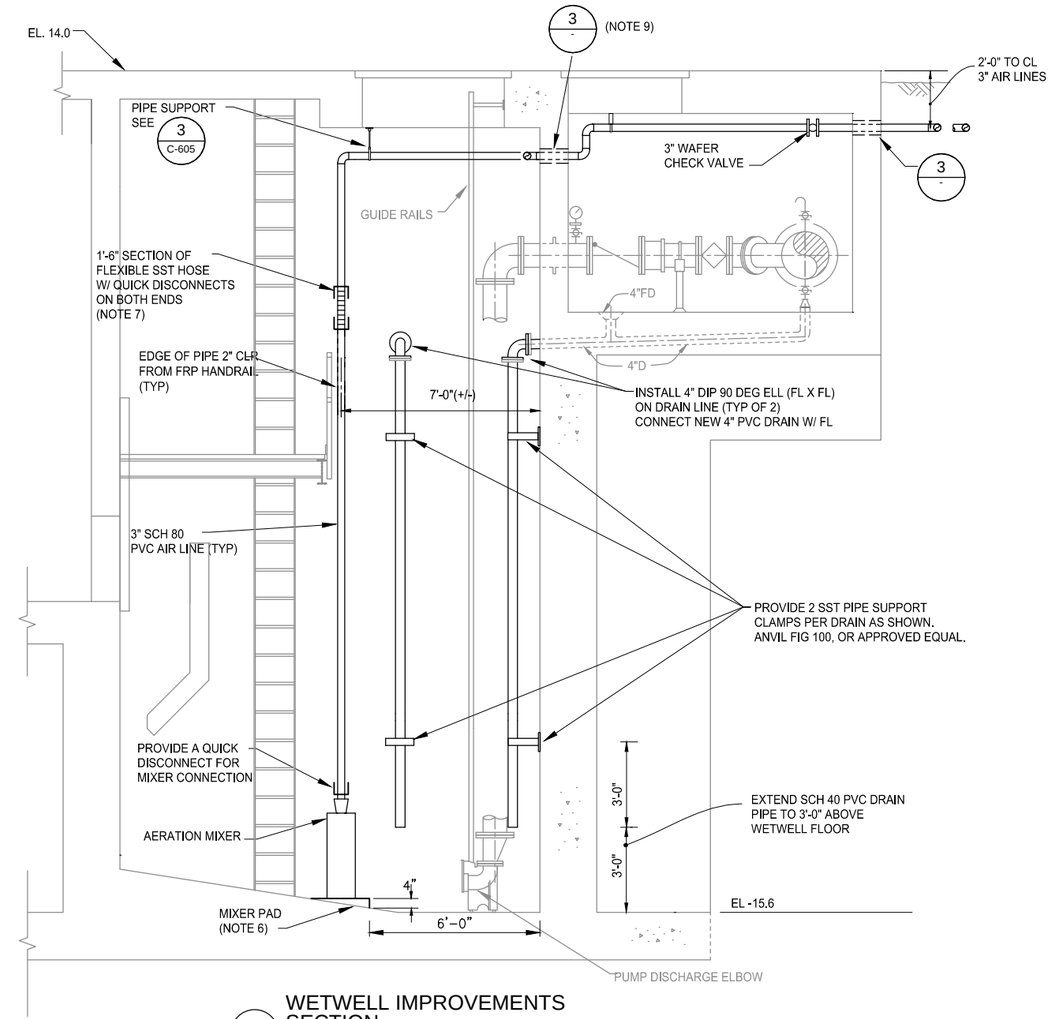

2 C-605 WETWELL IMPROVEMENTS SECTION
SCALE: 3/8"=1'-0"

NOTES:

1. REMOVE EXISTING POLYUREA COATING ON ALL CONCRETE SURFACES IN THE WETWELL AND APPLY NEW CONCRETE COATING IN ACCORDANCE WITH THE SPECIFICATIONS.
2. THE FLOOR OF THE WETWELL IS COATED WITH POLYUREA COATING WHICH IS TO BE REMOVED. DO NOT COAT THE FLOOR.
3. THE NEW CONCRETE COATING IS TO END AT THE TOP OF THE EXISTING CONCRETE FLOOR. SAW-CUT A 1/4" X 1/4" GROOVE WITHIN 6" FROM THE TOP OF THE CONCRETE FLOOR FOR THE TERMINATION OF THE COATING.
4. EXISTING FERROUS METALS IN THE WETWELL AND IN THE VALVE VAULT AS WELL AS THE METER VAULT ARE TO BE COATED WITH HIGH BUILD EPOXY IN ACCORDANCE WITH THE SPECIFICATIONS. SURFACE PREPARATION PER THE SPECIFICATIONS.
5. THIS SST SLIDE GATE IS TO BE REMOVED AND DELIVERED TO THE CITY FOR REPAIR, AND REINSTALLED AFTER REPAIR IS COMPLETED PER SPECIAL PROVISION 8-30.
6. THE TOP 1/2" OF THE EXISTING CONCRETE FLOOR IS TO BE REMOVED IN THE AREA OF THE MIXING PAD. THE MIXER PAD IS TO BE FORMED ON 3 SIDES, AND THE SPECIFIED CEMENT GROUT IS TO BE USED PER SPECIFICATION 15100.
7. SEE SPECIFICATION 11400 FOR THE FLEXIBLE SST HOSE. PROVIDE THREADED FEMALE SST QUICK DISCONNECTS ON BOTH ENDS. THE PVC PIPE FROM THE QD TO THE MIXER SHALL BE CUT TO A LENGTH SUCH THAT THE FLEXIBLE HOSE IS IN COMPRESSION WHEN INSTALLED. THE MIXER SHALL FULLY REST ON THE PAD, AND NOT BE SUPPORTED BY THE AIR PIPING.
8. THE GUIDE RAILS ARE TO BE PROTECTED FROM PAINT SPLATTER. MASK OR TEMPORARILY REMOVE THE GUIDE RAILS.
9. THE CORED OPENINGS IN THE WALL BETWEEN THE WETWELL AND THE VAULT ARE TO BE INSTALLED PRIOR TO THE CONCRETE COATING BEING APPLIED IN THE WETWELL.

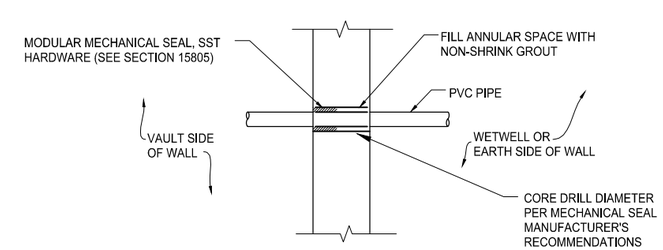

3 C-605 DETAIL
SCALE: 3/4"=1'-0"

REV	DATE	DES	CHECK	APPROVALS	REVISION DESCRIPTION

DATE: 07-07-14
DESIGNED:
DRAWN:
CHECKED:
APPROVED:
CIVIL REVIEW:
ARCH REVIEW:
STRUC REVIEW:
MECH REVIEW:

This drawing is full size when 22"x 34" or is reduced to half size when 11"x17"

TETRA TECH
www.tetratech.com
1420 Fifth Avenue, Suite 600
Seattle, Washington 98101
Phone: 206-883-9300 Fax: 206-883-9301

BRUCE R. GRAVELLE STATE OF WASHINGTON 23364 REGISTERED PROFESSIONAL ENGINEER 7-7-14

CITY OF FIFE
PS-10 REHABILITATION / PS-5 AND PS-6 WETWELL COATING
PS-6

COATING NOTES AND DETAIL 2

FILE NO:
PROJECT NO: 135-12584-14002
DWG NO: C-604
SHEET: OF

COPYRIGHT 2010, TETRA TECH, ALL RIGHTS RESERVED

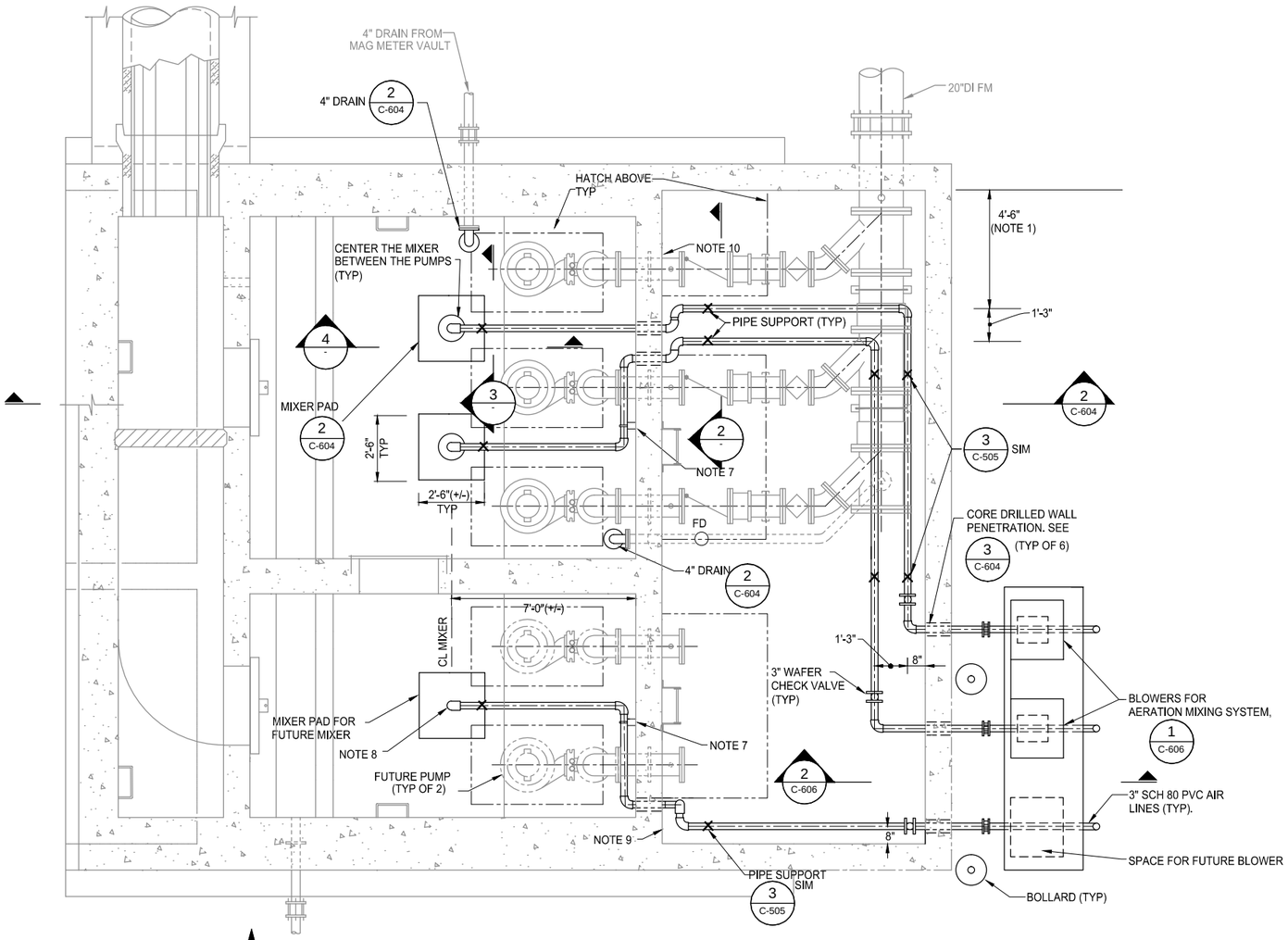

1 C-601 WETWELL IMPROVEMENTS PLAN
SCALE: 3/8"=1'-0"

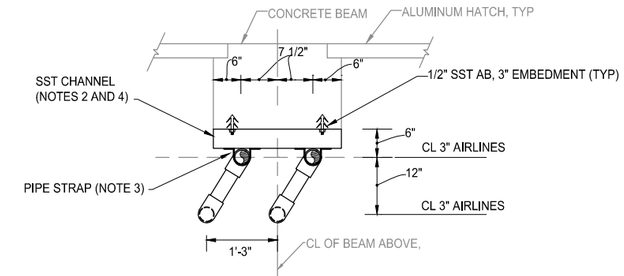

2 - SECTION
SCALE: 3/4"=1'-0"

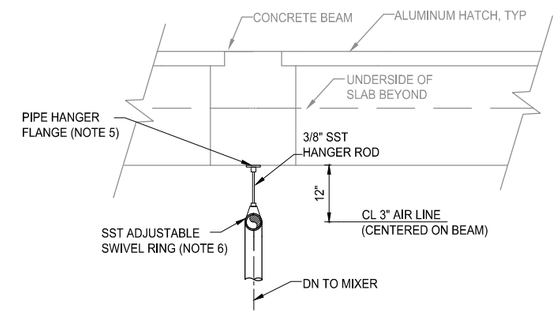

3 - C-504 SECTION
SCALE: 3/4"=1'-0"

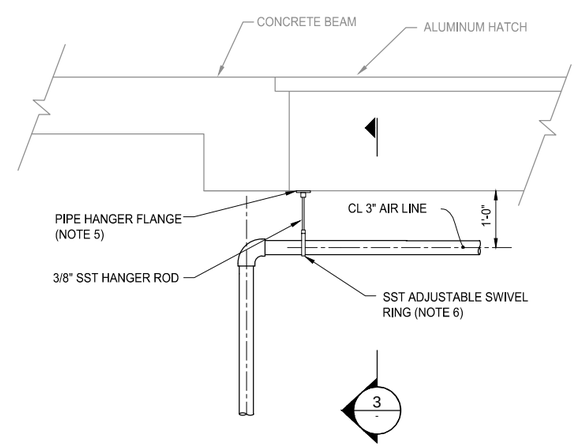

4 - SECTION
SCALE: 3/4"=1'-0"

NOTES:

1. THE TWO 3" SCH 80 PVC AIRLINES ARE TO BE CENTERED BETWEEN THE HATCHES OF THE VALVE VAULT.
2. THE SST CHANNEL IS TO BE ANVIL FIG. AS 200EH, OR APPROVED EQUAL.
3. THE SST PIPE STRAP IS TO BE ANVIL FIG. 262, FOR 3.5" OD PIPE, OR APPROVED EQUAL.
4. PROVIDE COMBINATION OF SST CHANNEL AND SHIMS TO OBTAIN THE INDICATED DIMENSION BELOW THE BEAM.
5. THE IRON PIPE HANGER FLANGE IS TO BE ANVIL FIG. 153, OR APPROVED EQUAL. COAT W/ HIGH BUILD EPOXY SYSTEM A-1.
6. THE SST ADJUSTABLE SWIVEL RING IS TO BE 316 SST ANVIL FIG. 69, OR APPROVED EQUAL. THE HANGER ROD IS TO BE 316 SST 3/8-INCH DIAMETER ANVIL FIG. 146, OR APPROVED EQUAL.
7. SST PIPE CLAMP ANVIL FIG. 103, OR APPROVED EQUAL.
8. CAP THE 3" PVC AIR LINE FOR THE FUTURE MIXER APPROX 1'-0" BELOW THE ELBOW DOWN.
9. PROTECT OR RELOCATE A 1" DIAMETER EXISTING ELECTRICAL CONDUIT FROM THE WALL IN THIS AREA. SEE "PS-6 WW COATING PHOTOS" APPENDIX D FOR MORE INFORMATION.
10. REMOVE EXISTING 1" DIAMETER ELECTRICAL CONDUIT FROM THE WALL IN THIS AREA. SEE "PS-6 WW COATING PHOTOS" APPENDIX D FOR MORE INFORMATION.
11. LOCATE ALL EXISTING BURIED UTILITIES PRIOR TO EXCAVATING FOR THE PVC AIR LINES AND THE BLOWER PAD.
12. ALL FASTENERS AND ANCHOR BOLTS ARE TO BE 316 SST.

REV	DATE	DES	CHECK	APPROVALS	REVISION DESCRIPTION

DATE: 07-07-14
DESIGNED:
DRAWN:
CHECKED:
APPROVED:
CIVIL REVIEW:
ARCH REVIEW:
STRUC REVIEW:
MECH REVIEW:

This drawing is full size when 22"x 34" or is reduced to half size when 11"x17"

TETRA TECH
www.tetratech.com
1420 Fifth Avenue, Suite 600
Seattle, Washington 98101
Phone: 206-883-9300 Fax: 206-883-9301

BRUCE R. GRAVELINE, STATE OF WASHINGTON, 23364, REGISTERED PROFESSIONAL ENGINEER, 7-7-14

CITY OF FIFE
PS-10 REHABILITATION / PS-5 AND PS-6 WETWELL COATING
PS-6

AERATION MIXER INSTALLATION

FILE NO:
PROJECT NO: 135-12584-14002
DWG NO: C-605
SHEET: OF

COPYRIGHT 2010, TETRA TECH, ALL RIGHTS RESERVED

Path P:\12584\135-12584-14002\CAD\SheetFiles\C-605 AERATION MIXER INSTALLATION.dwg Plot date Jul 09, 2014-02:04:36pm CAD User jamecarter.
Xref Filename: | FAB0200 | FAB0200B(C-605) | G-BS-22x34hz | GS-BRG-WA | _BRG-STG |
J:\2500075\FA0025\FA02014 6-1-01

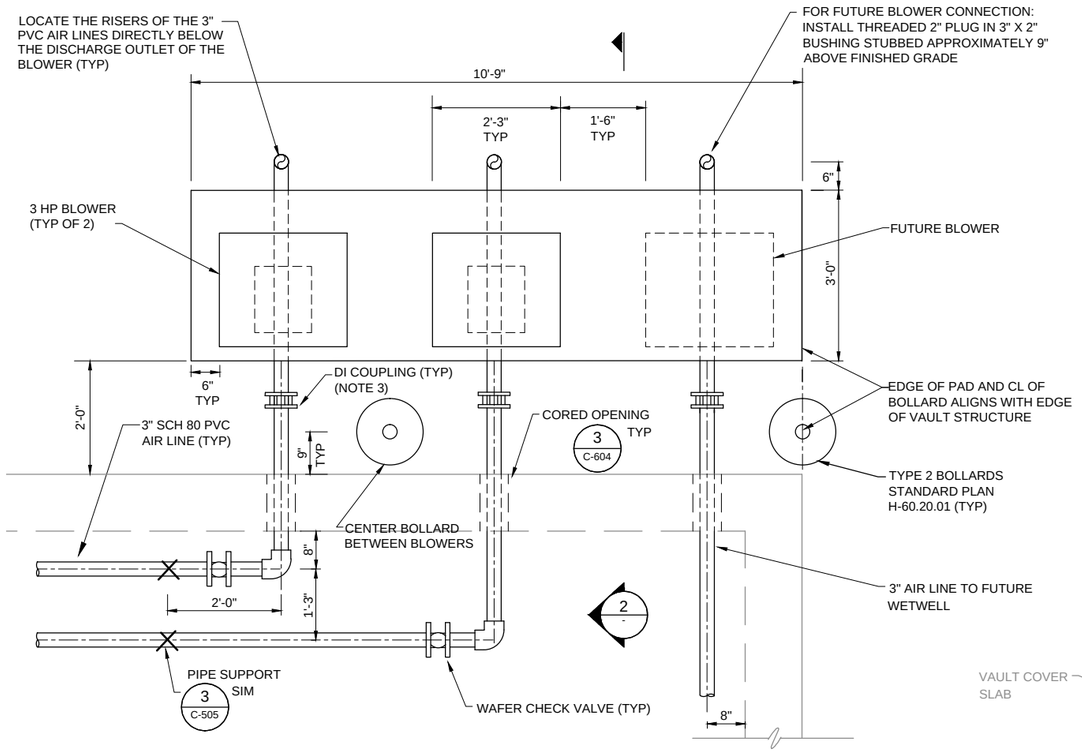

1 C-605 AERATION BLOWER PLAN

SCALE: 3/4"=1'-0"

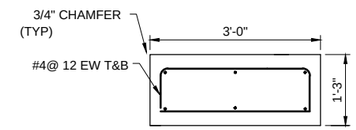

BLOWER PAD DETAILS

SCALE: 3/4"=1'-0"

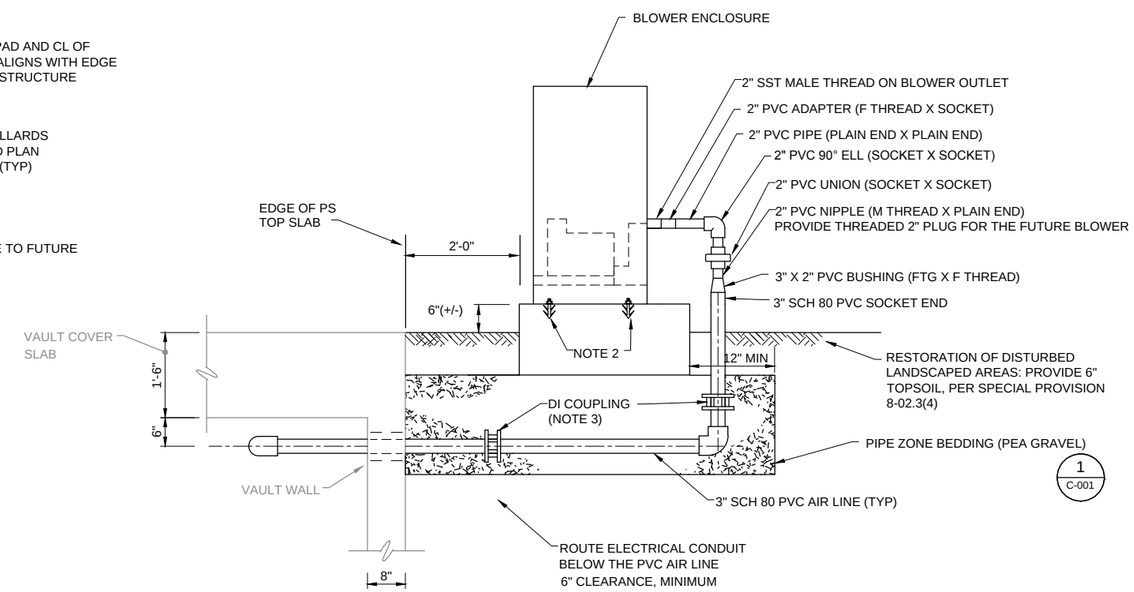

2 - SECTION

SCALE: 3/4"=1'-0"

NOTES:

1. ALL PIPE AND FITTINGS FOR AIR LINES ARE TO BE SCH 80 PVC.
2. SST ANCHOR BOLTS PER MANUFACTURERS SPECIFICATIONS
3. DUCTILE IRON COUPLING TO BE PER STANDARD SPECIFICATION 9-30.2 (11)

REV	DATE	DES	CHECK	APPROVALS	REVISION DESCRIPTION

DATE: 07-07-14
DESIGNED:
DRAWN:
CHECKED:
APPROVED:
CIVIL REVIEW:
ARCH REVIEW:
STRUC REVIEW:
MECH REVIEW:

This drawing is full size when 22"x 34" or is reduced to half size when 11"x17"

TETRA TECH
www.tetratech.com
1420 Fifth Avenue, Suite 600
Seattle, Washington 98101
Phone: 206-883-9300 Fax: 206-883-9301

BRUCE R. GRAVELEY, STATE OF WASHINGTON, 23364, REGISTERED PROFESSIONAL ENGINEER, 7-7-14

CITY OF FIFE
PS-10 REHABILITATION / PS-5 AND PS-6 WETWELL COATING
PS-6

AERATION MIXING DETAILS

FILE NO:
PROJECT NO: 135-12584-14002
DWG NO: C-606
SHEET: OF

COPYRIGHT 2010, TETRA TECH, ALL RIGHTS RESERVED

Path: P:\12584\135-12584-14002\CAD\SheetFiles\C-606 AERATION MIXING DETAILS.dwg Plot date: Jul 09, 2014-01:39:07pm CAD User: janiecarter.
Xref Filename: IG-BS-22x34hz | GS-BRG-VA 1_BRG-SIG |

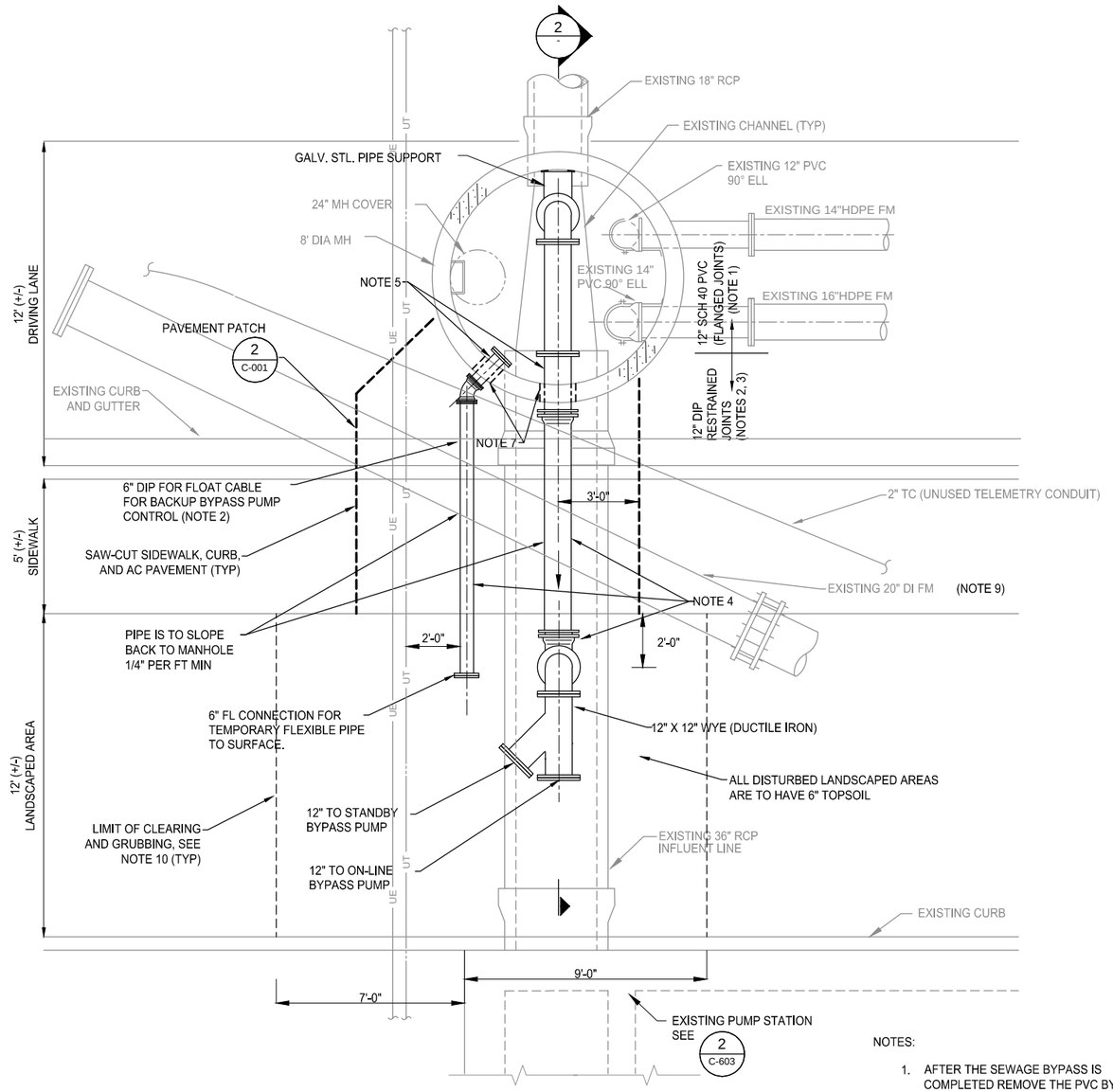

1 C-601 BYPASS PIPING PLAN
SCALE: 3/8"=1'-0"

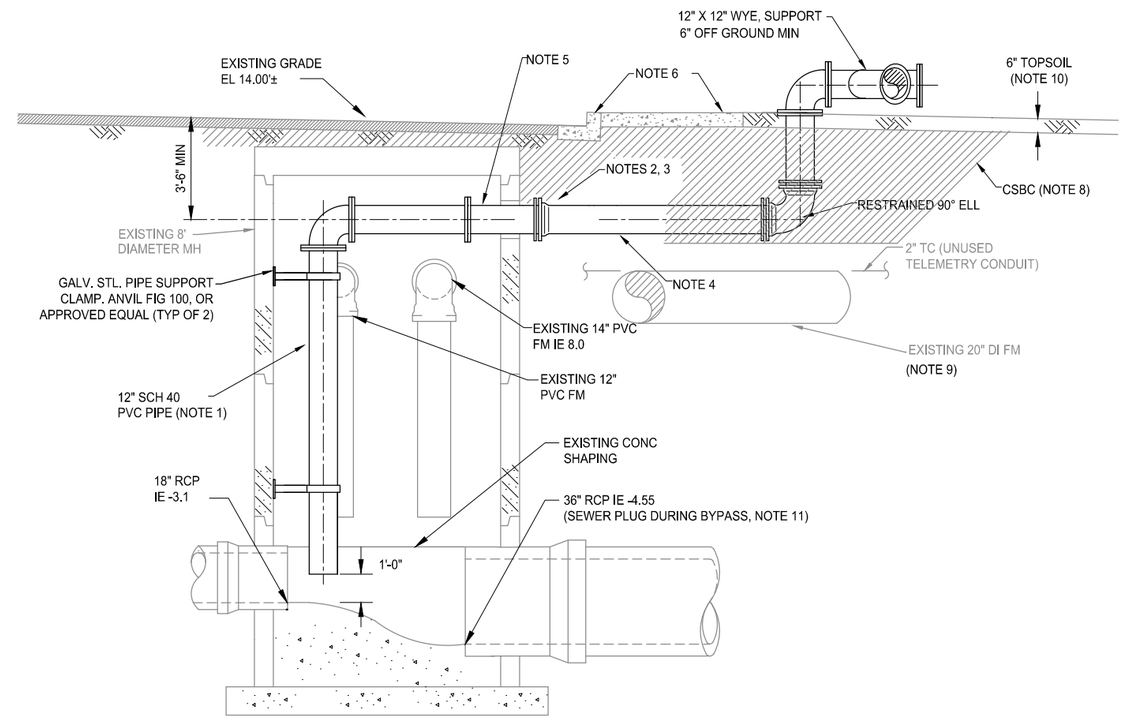

2 SECTION
SCALE: 3/8"=1'-0"

NOTES:

1. AFTER THE SEWAGE BYPASS IS COMPLETED REMOVE THE PVC BYPASS PIPE FROM THE MANHOLE.
2. RESTRAINED DIP JOINTS SHALL BE A BOLTED SYSTEM PER SECTION 15085 OF THE TECHNICAL SPECIFICATIONS. THE 6" DIP JOINTS DO NOT REQUIRE RESTRAINT.
3. REFER TO PIPE SCHEDULE, DWG C-001, FOR DIP DETAILS.
4. AFTER THE SEWAGE BYPASS IS COMPLETED, REMOVE ALL 6" AND 12" DIP PIPE. INSTALL DIP CAP OR PLUG ON PE OF WALL SPOOLS. ALL BACKFILL IN THE ROADWAY AND SIDEWALK AREAS IS TO BE CSBC MEETING SECTION 9-03.9(3) OF THE STANDARD SPECIFICATIONS.
5. THE DUCTILE IRON WALL SPOOLS (FL X PE) ARE TO BE LEFT IN PLACE AT THE COMPLETION OF THE COATING REHABILITATION PROJECT. INSTALL PVC BLIND FLANGES ON THE DIP WALL SPOOLS INSIDE THE MANHOLE AND A DIP PLUG ON THE EXTERIOR SIDE OF THE SPOOLS.
6. RESTORE CURB AND GUTTER PER THE STANDARD SPECIFICATIONS AND STANDARD PLAN F-10, 12-02. RESTORE THE SIDEWALK PER THE STANDARD SPECIFICATION AND STANDARD PLAN F-30, 10-01.
7. CORE DRILL 16" DIA OPENING FOR 12" PIPE AND 10" DIA OPENING FOR 6" PIPE. INSTALL MECHANICAL SEAL AND GROUT INTERIOR FACE OF MANHOLE. SEE DET 3, DWG C-604.
8. ALL TRENCH BACKFILL IS TO BE CSBC.
9. THE LOCATIONS SHOWN FOR THE EXISTING 20" DIA FORCEMAIN AND THE UNUSED 2" DIA TELEMETRY CONDUIT ARE APPROXIMATE. THE CONTRACTOR IS TO LOCATE ALL BURIED UTILITIES PRIOR TO EXCAVATING.
10. AFTER THE BYPASS PIPING HAS BEEN REMOVED PROVIDE 6" TOPSOIL IN LANDSCAPED AREAS PER SPECIAL PROVISION 8-02.3 (4).
11. THE SEWER PLUG IS TO HAVE AN 8" DIAMETER THROUGH PIPE, WITH A CAP TO PREVENT SEWAGE FROM ENTERING THE 36" RCP INFLUENT LINE. THIS CONNECTION MAY BE USED IF THE CITY DECIDES TO INSTALL A CIPP IN THE INFLUENT LINE PER BID ALTERNATIVE 1B, PER SPECIAL PROVISION 8-32.

REV	DATE	DES	CHECK	APPROVALS	REVISION DESCRIPTION

DATE: 01–25–14
DESIGNED:
DRAWN:
CHECKED:
APPROVED:
CIVIL REVIEW:
ARCH REVIEW:
STRUC REVIEW:
MECH REVIEW:

TETRA TECH
www.tetratech.com
1420 Fifth Avenue, Suite 600
Seattle, Washington 98101
Phone: 206-883-9300 Fax: 206-883-9301

BRUCE R. GRAVELLE — STATE OF WASHINGTON — 23364 — REGISTERED PROFESSIONAL ENGINEER — 7-7-14

CITY OF FIFE
PS-10 REHABILITATION / PS-5 AND PS-6 WETWELL COATING
PS-6
BYPASS PUMPING DETAILS

FILE NO:
PROJECT NO: 135–12584–14002
DWG NO: C-607
SHEET: OF

COPYRIGHT 2010, TETRA TECH, ALL RIGHTS RESERVED

This drawing is full size when 22"x 34" or is reduced to half size when 11"x17"

Path: P:\12584\135-12584-14002\CAD\SheetFiles\C-607 BYPASS PUMP DETAILS.dwg Plot date: Jul 07, 2014-03:59:47pm CAD User: jamie.carter.
Xref Filename: [QS-SRG-WA]_BRG-SIG]

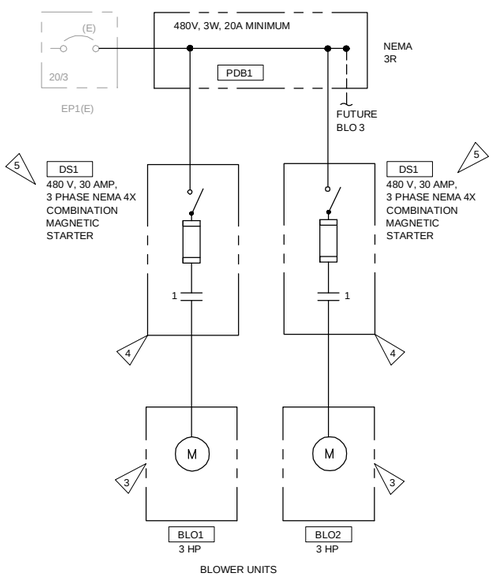

PARTIAL ONE LINE DIAGRAM

SCALE: NONE

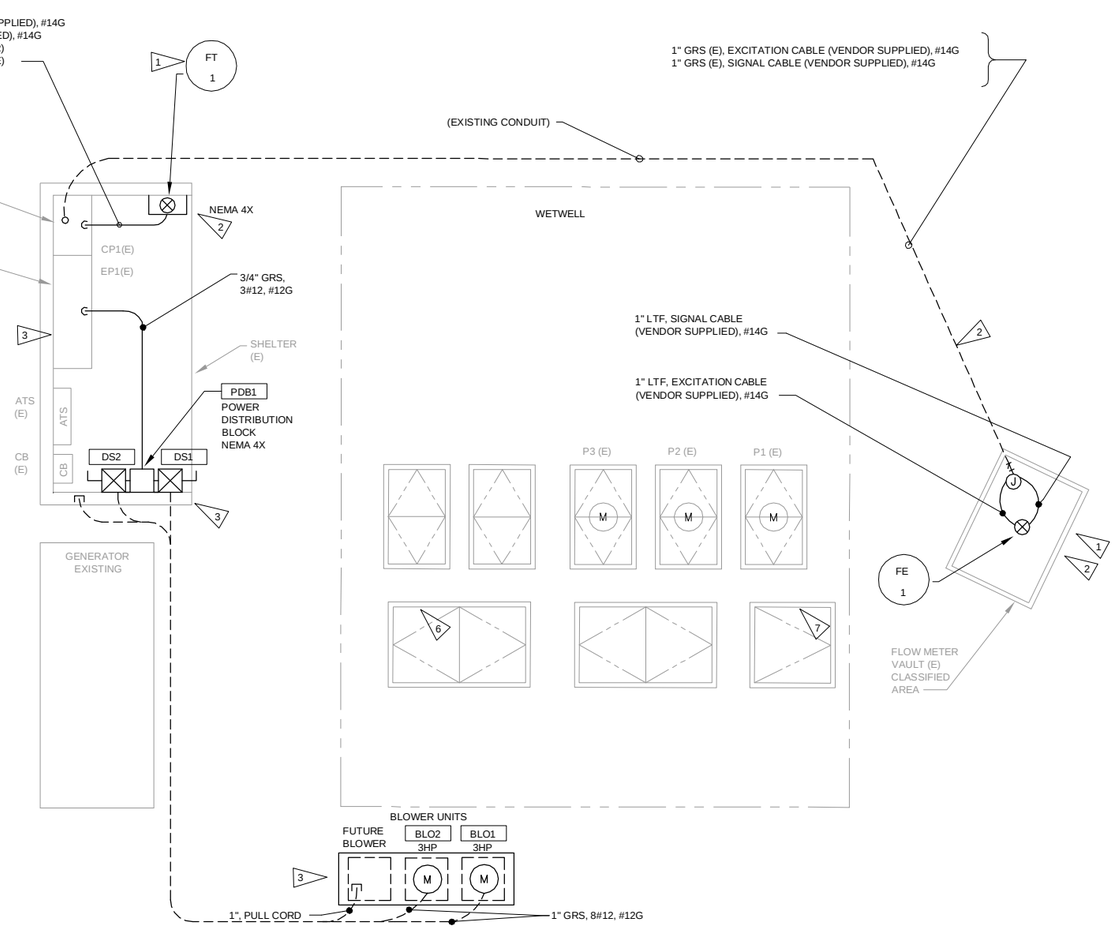

PUMP STATION 6 ELECTRICAL PLAN

SCALE: 1/4"=1'-0"

NOTES:

1. PROVIDE NEW FLOW METER ELEMENT IN VAULT. INSTALL AND CONNECT FLOW ELEMENT AND FLOW TRANSMITTER IN STRICT ACCORDANCE WITH MANUFACTURER'S LITERATURE, REQUIREMENTS, AND RECOMMENDATIONS. PROVIDE FLOW METER GROUNDING RINGS. FLOW METER SHALL BE PER SPECIFICATION SECTION 17200

2. DISCONNECT EXISTING FLOW METER WIRES FROM EXISTING CONTROL PANEL. PULL EXISTING FLOW METER WIRE OUT OF EXISTING CONDUIT. PROVIDE NEW FLOW METER TRANSMITTER IN ENCLOSURE. INSTALL NEW FLOW TRANSMITTER ENCLOSURE ON SHELTER WALL AT 5'0" ABOVE SLAB. PROVIDE ADDITIONAL CONDUIT BETWEEN NEW FLOW TRANSMITTER AND EXISTING CONTROL PANEL. INSTALL AND CONNECT MANUFACTURER FURNISHED EXCITATION AND SIGNAL CABLE BETWEEN NEW FLOW ELEMENT IN VAULT AND NEW FLOW TRANSMITTER, ROUTING VIA EXISTING CONTROL PANEL. PROVIDE NEW FLOW TRANSMITTER POWER, 4-20 MA SIGNAL, AND TOTALIZATION PULSE SIGNAL WIRING BETWEEN NEW FLOW TRANSMITTER AND EXISTING CONTROL PANEL AND CONNECT AS PREVIOUSLY CONNECTED. INSTALL AND CONNECT FLOW METER AND FLOW TRANSMITTER IN STRICT ACCORDANCE WITH MANUFACTURER'S LITERATURE, REQUIREMENTS, AND RECOMMENDATIONS. RUN CONTINUOUS AND DO NOT SPLICE EXCITATION OR FLOW ELEMENT SIGNAL CABLES. SEE CONTROL PANEL DRAWINGS IN O&M MANUAL FOR ADDITIONAL INFORMATION ON EXISTING CONTROL PANEL. SEE PUMP STATION ELECTRICAL PLAN DRAWINGS IN PUMP STATION CONTRACT O&M MANUALS. MANUALS ARE AVAILABLE FROM THE CITY.

3. UTILIZE EXISTING SPARE 20 AMP 3 POLE, 480 VAC CIRCUIT BREAKER IN EXISTING ELECTRICAL PANEL TO POWER TWO NEW BLOWERS. PROVIDE CONDUIT TO DISCONNECT SWITCH LOCATION ON SHELTER WALL. PROVIDE POWER DISTRIBUTION BLOCK IN NEMA 3R ENCLOSURE AND TWO NEW FUSED DISCONNECT SWITCHES. PROVIDE CONDUIT AND WIRE TO PACKAGED BLOWER UNITS AND CONNECT PER MANUFACTURER'S LITERATURE, REQUIREMENTS, AND RECOMMENDATIONS. BLOWER UNITS SHALL BE PER SPECIFICATION SECTION 11400. BLOWER UNITS INCLUDE INTERNALLY PRE WIRED CONTROLS. SEE ELECTRICAL PANEL DRAWINGS IN O&M MANUAL FOR ADDITIONAL INFORMATION ON EXISTING ELECTRICAL PANEL. FURNISH 3 SPARE FUSES.

4. FUSE SIZE AND TYPE PER BLOWER MANUFACTURE'S RECOMMENDATION.

5. PROVIDE STARTER WITH 120VAC COIL. COORDINATE AND INSTALL STARTER AND OZONE GENERATOR CONTROLS WITH BLOWER PACKAGE.

6. PROTECT OR RELOCATE EXISTING ELECTRICAL CONDUIT FOR THE INSTALLATION OF THE 3" PVC AIR LINES. SEE PS-6 WET WELL COATING PHOTO, APPENDIX E, VOLUME 1.

7. REMOVE EXISTING ELECTRICAL CONDUIT IN THIS AREA. SEE PS-6 WET WELL COATING PHOTOS, APPENDIX E, VOLUME 1.

REFERENCE DOCUMENTS

1. CONTROL PANEL SHOP DRAWINGS IN CITY PROVIDED O&M MANUALS
2. ELECTRICAL PANEL SHOP DRAWINGS IN CITY PROVIDED O&M MANUALS
3. PUMP STATION ELECTRICAL PLAN DRAWINGS IN CITY PROVIDED O&M MANUALS

PUMP STATION 6 LOAD CALCULATION			100 AMP SERVICE		100 AMP GENERATOR	
480 VAC, 3-P, 4-W	HP/KVA	AMPS	UTILITY DEMAND FACTOR	UTILITY DEMAND AMPS	GENERATOR DEMAND FACTOR	GENERATOR DEMAND AMPS
PUMP P1	25 HP	34	1.25	42.50	1.25	42.5
PUMP P2	25 HP	34	1	34	1	34
PUMP P3	25 HP	34	0	0	0	0
TRANSFORMER 1 PHASE	7.5 KVA	15.63	0.85	13.28	0.7	10.94
BLOWER BLO1	3 HP	4.8	1	4.8	1	4.8
BLOWER BLO2	3 HP	4.8	1	4.8	1	4.8
DEMAND				99.38		97.04

NOTE 1: THE MAXIMUM OPERATING POWER OF PUMPS 1, 2, AND 3 IS 18 HP AND 25 AMPS

NOTE 2: THE NAMEPLATE FULL LOAD AMPS OF PUMP 1, 2, AND 3 IS 32.7 AMPS

NOTE 3: THE NAMPLATE FULL LOAD AMPS OF BLO1 AND BLO2 IS 4.1 AMPS

REV	DATE	DES	CHECK	APPROVALS	REVISION DESCRIPTION

DATE: 07-07-14	CIVIL REVIEW:
DESIGNED:	ARCH REVIEW:
DRAWN:	STRUC REVIEW:
CHECKED:	MECH REVIEW:
APPROVED:	

TETRA TECH
www.tetratech.com
1420 Fifth Avenue, Suite 600
Seattle, Washington 98101
Phone: 206-883-9300 Fax: 206-883-9301

RANDY FRITCHMAN, STATE OF WASHINGTON, 39949, REGISTERED PROFESSIONAL ENGINEER, 7-7-14

CITY OF FIFE
PS-10 REHABILITATION / PS-5 AND PS-6 WETWELL COATING
PS-6

FLOW METER REPLACEMENT AND AERATION BLOWER ELECTRICAL

FILE NO:
PROJECT NO: 135-12584-14002
DWG NO: E-601
SHEET: OF

This drawing is full size when 22"x 34" or is reduced to half size when 11"x17"

COPYRIGHT 2010, TETRA TECH, ALL RIGHTS RESERVED

Path: P:\12584\135-12584-14001\CAD\SheetFiles\E-601.dwg Plot date: Jul 09, 2014-11:09:58am CAD User: ryan.meyer
Xref Filename: I GS-BR-22x34hz I GS-BR-WA I _BF-STG I