CONTRACT PROVISIONS

VOLUME 1

Bid Proposal

Special Provisions

and Contract Specifications

FOR

CITY OF FIFE

PS-10 REHABILITATION / PS-5 AND PS-6 WETWELL COATING

July 2014

CITY OF FIFE

PUBLIC WORKS DEPARTMENT

5411 23RD STREET EAST

FIFE, WA 98424

CONTRACT PROVISIONS

for

City of Fife
PS-10 Rehabilitation / PS-5 and PS-6 Wetwell Coating

July 2014

Prepared by:

Tetra Tech
1420 Fifth Avenue, Suite 600
Seattle, WA 98101

Prepared for:
City of Fife
Department of Public Works
5411 23RD Street East
Fife, WA 98424

The above mentioned Contract Provisions have been reviewed and approved for advertisement. Such review includes all contract documents, specifications, and plans associated with the project.

Bruce Gravette

Doug Genzlinger

CONTRACT PROVISIONS
TABLE OF CONTENTS

CITY OF FIFE
PS-10 Rehabilitation / PS-5 and PS-6 Wetwell Coating

VOLUME 1

INVITATION FOR BIDS LD-7

INSTRUCTION TO BIDDERS LD-9

BIDDER'S CHECKLIST LD-13

PROPOSAL LD-14

BID SCHEDULE LD-15

BIDDER'S QUALIFICATION CRITERIA LD-33

BIDDER'S PROPOSED SUBCONTRACTORS LD-35

NONCOLLUSION CERTIFICATE LD-36

CERTIFICATE AS TO CORPORATE PRINCIPAL LD-37

BID BOND FORM LD-38

CONTRACT LD-40

PERFORMANCE & PAYMENT BOND WITH GUARANTY LD-43

SPECIAL PROVISIONS SP-1

APPENDICES

A. PIERCE COUNTY PREVAILING WAGE RATES
B. CONTRACT SPECIFICATIONS
C. PS-10 REHABILITATION PHOTOS
D. PS-5 WETWELL COATING PHOTOS
E. PS-6 WETWELL COATING PHOTOS
F. TACOMA POWER LETTER OF AGREEMENT, SERVICE UPGRADE AT FIFE PUMP STATION #10
G. SST SLIDE GATE SHOP DRAWINGS
H. WSDOT STANDARD PLANS
I. WSDOT AMENDMENTS
J. CITY OF FIFE STANDARD DETAILS FOR WATER METER AND WATER MAIN CONSTRUCTION

VOLUME 2

CONTRACT DRAWINGS

INVITATION FOR BIDS

Notice is hereby given that sealed bids will be received by the City of Fife at City Hall up to the hour of 10:00 a.m. on August 7th, 2014, for the City of Fife **PS-10 Rehabilitation / PS-5 and PS-6 Wetwell Coating** and will then be opened and publicly read. City Hall located at **5411 23rd Street East, Fife, Washington**. Proposals received after **10:00 a.m.**, on **August 1st, 2014**, will not be considered.

The PS-10 Rehabilitation includes the following:

- Install primary and secondary vaults and conduit to route primary power around the pump station site, as well as serve the pump station with 460 V power. Tacoma Power will install the primary and secondary cabling as well as the transformer.
- Install temporary sewage bypass pumping systems at the pump station to allow the station to be taken out of service.
- Install water system isolation valves and other improvements at the east and west ends of the site to allow isolation and protection of a water main located immediately south of the pump station site.
- Install shoring between the pump station site and Industry Drive to allow the installation of the new valve vault and buried piping.
- Remove and replace the pumps in the existing wetwell, including a new electrical and control system.
- Construct new cover slabs with aluminum hatches over the wetwell and the new valve vault.
- Construct a weather cover over the new electrical area and a bollard/curb feature to protect the weather cover from damage.
- Replace curb and gutter along Industry Drive, construct curb ramp, patch and overlay damaged road and parking areas.

The PS-5 and PS-6 Wetwell Coating improvements include the following:

- Install temporary sewage bypass pumping systems at the pump stations to isolate the wetwell.
- Remove the existing polyurea coating in the wastewater pump station wetwells.
- Inspect the wetwell wall and floor areas for groundwater leakage, seal all leaks by injection grouting, and repair damaged concrete to restore original shape (under a force account arrangement).
- Perform a TV inspection of the 36-inch diameter influent line at both stations.
- Prepare concrete and metal surfaces in the wetwell and the piping in the valve vaults with abrasive blasting or high pressure water jetting, and apply new coatings to the prepared surfaces.
- Install a wetwell mixing/aeration system for controlling odors and grease collection at both stations.
- Replace the existing 20-inch diameter flow meter at PS-6.
- Patch and overlay damaged roadway areas near the bypass manholes.
- Bid Alternative No. 1A and 1B: Install a cured-in-place liner in the 36-inch diameter influent pipeline at both stations

All work shall be in accordance with the Contract Documents, City of Fife Standards, and WSDOT 2014 Standard Specifications. Pierce County prevailing wage requirements are in effect.

Bidder's Qualification Criteria:

The Contracting Agency has established project specific supplemental criteria, in accordance with RCW 39.04.350(2), for determining Bidder responsibility. The apparent two lowest Bidders will be requested to

submit to the Contracting Agency within 48 hours of the official bid tabulation by the City, project descriptive data and Owner contact information for the following:

- Two projects completed since 2010 that included a minimum of 1,000 square feet of epoxy-based or polyurethane-based concrete coating.
- Two projects completed since 2010 that included excavation for a pump station structure that required the installation of a dewatering system (sump-only systems excluded) and operating pumps, piping, and electrical equipment.

Details of the Bidders Qualification Criteria requested are provided in the bid documents.

Pre-Bid Meeting:

A pre-bid meeting will be held on July 15th, with strict adherence to the following schedule:

- 9:00 to 9:45 AM—PS-10, 3949 Industry Drive E
- 15 minute travel time
- 10:00 to 10:45—PS-5, Corner of 20th St E and 20th St Drive
- 15 minute travel time
- 11:00 to 11:45—PS-6, 4402 20th St E

Attendance at the meeting is not mandatory, however this will be the only opportunity for bidders to visit the sites. Hatches will be opened over the wetwell, valve vault, and the meter vault. Attendees are to bring their own personal protective equipment.

Bid Submittal Instructions:

Plans, specifications, and addenda may be viewed and obtained online at www.bxwa.com. Click on: "Posted Projects," "Public Works," "City of Fife," and "Projects Bidding." The plan holder's list is maintained by Builder's Exchange of Washington, Inc. Registration for the plan holder's list may be made online, by phoning (425) 258-1303, or at Builder's Exchange of Washington located at 2607 Wetmore Ave, Everett, WA. The documents are also available at the City of Fife's website at http://www.cityoffife.org/?p=city_departments&a=public_works&b=project_bids_and_awards.

All bids shall be submitted on the prescribed Bid Forms and in the manner as stated in this invitation and in the Bid Document and said bids shall be accompanied by a bid deposit in the form of cash, cashier's check, certified check, postal money order, or a surety bond to the City of Fife in the amount of five percent (5%) of the total amount of the bid. **Bid Bonds submitted on other than the bond form provided by the City may be subject to rejection. Faxed bids and/or surety bond will not be accepted.**

Bids must be submitted in a sealed envelope with the outside clearly marked "sealed bid" with the bid opening date and time, and the project name as it appears in this invitation and the name and address of the bidder. Bids shall be addressed to the **City Clerk, City of Fife-5411 23rd Street, Fife, WA 98424**.

The City of Fife reserves the right to reject any or all bids and to waive irregularities in the bid or in the bidding.

No Bidder may withdraw his proposal after **10:00 a.m., August 1st, 2014,** or before award of Contract, unless said award is delayed for a period exceeding sixty (60) days.

Liquidated Damages: The Project must be physically completed within 260 working days. Liquidated damages of $1,000.00 will be assessed for each calendar day of delay in completion of the Project.

Phone inquiries regarding the project may be directed to **Russ Blount, P.E., (253) 896-8766 or email at Rblount@ cityoffife.org** or **Ken Gill, P.E., (253) 922-9315 or email at KGill@cityoffife.org.**

Carol Etgen
City Clerk

INSTRUCTION TO BIDDERS

I. Execution of Contract

A. Execution of Contract:

1. Within 10 days after the date the lowest qualified Bidder receives notification of award, the lowest qualified Bidder shall execute and return the Contract and the required number of copies and shall furnish a performance and payment bond and insurance.

2. At the time of bid submittal, the Contractor shall notify the City in writing of the names of all proposed subcontractors and materials suppliers for the work (See "Bidder's Proposed Subcontractor's" in the proposal section).

B. Performance Bond/Payment Bond:

1. To be furnished at the time of delivery of the executed Contract.

2. To be in full amount of Contract price.

3. The surety must be authorized to do business in the State of Washington and be satisfactory to the City. Each bond must be approved in writing by the City Attorney.

C. Contract Insurance:

1. Work under the Contract shall not commence until the City has approved the Contractor's insurance. No subcontractors shall commence work until the City has approved subcontractor's insurance. Insurance shall be as required per Section 1-07.18, of the Special Provisions.

2. The Contractor and subcontractors shall obtain and maintain Workman's Compensation Insurance during the life of this Contract.

3. Contractor specifically waives its immunity under Title 51 of the Revised Code of Industrial Insurance Act for injuries to its employees, and indemnifies the City from liability for the action brought by those employees.

D. Fife Business License:

1. Work under the Contract shall not commence until the Contractor has submitted a Fife business license per Section 1-02.15 of the Special Provisions.

2. No Subcontractors shall commence work until they have submitted a Fife business license.

II. Legal Wages on Public Works

A. Statement of Intent to Pay Prevailing Wages:

1. The Contractor shall submit a Statement for the Contractor and each and every subcontractor to the Industrial Statistician of the Department of Labor and Industries for approval. A $25.00 fee payable to the Department of Labor and Industries shall be included for each statement submitted. Should force account work be authorized by the City, the Contractor shall, at his/her own expense, provide the City with a new statement of Intent to Pay Prevailing Wages if any changes have occurred since the issuance of the original Intent to Pay Prevailing Wages was

filed. Force account wages shall be for straight time only, no overtime. In an emergency the City will authorize/direct overtime

2. For contracts in excess of $10,000, the Contractor shall post in a location readily visible to workers at the job site:

   a. A copy of the approved statement of Intent to Pay Prevailing Wages (Labor and Industries [L & I] Form F700-029-000).

   b. The address and telephone number of the Industrial Statistician of the Department of Labor and Industries.

3. The statement of Intent to Pay Prevailing Wages shall include the Contractor's registration certificate number or UBI number and prevailing rate of wage for each classification of workers entitled to prevailing wages. Self-employed or owner/operator contractors or subcontractors who perform the actual work will be required to submit a statement regardless of the method of payment.

B. Affidavit of Wages Paid: Following final acceptance of the Project, the Contractor shall submit, for the Contractor and each and every subcontractor, an Affidavit of Wages Paid (L & I Form F700-007-000) form to the Industrial Statistician of the Department of Labor and Industries for approval. A $25.00 fee payable to the Department of Labor and Industries shall be included for each statement submitted. Self-employed or owner/operator contractors or subcontractors who perform the actual work will be required to submit an affidavit regardless of the method of payment.

III. Contract Payments

A. Progress payments, as permitted by the specifications, will be made by the City as work is accomplished. No payments will be made until a certified Intent to Pay Prevailing Wages for the Contractor and all subcontractors has been received by the City.

B. There will be reserved and retained from moneys earned by the Contractor, as determined by the progress estimates, a sum equal to five percent (5%) of such estimates. The retainage may be placed in an escrow or interest bearing account at the Contractor's request.

C. When all work has been completed to the satisfaction of the Department of Public Works, the final payment less retainage will be paid.

D. After acceptance of the contract work by the City Council, a Notice of Completion of Public Work Contract will be forwarded to the State Department of Revenue. The retainage will be held until approval of release from the State has been received or a 60-day period has elapsed, whichever is longer. No retainage may be released until the Affidavit of Wages Paid for Contractor and subcontractors is on file with the City and the City has received from the Department of Revenue a certificate that all taxes, increases, and penalties due have been paid (RCW 60.28.050).

E. After acceptance of the Project by the City Council, a Certificate of Completion will be issued by the City and forwarded to the Contractor. The Certificate will state the warranties and/or guarantees required by the Contract Documents. The issuance will signify the starting and completion of all warranties as may be required.

F. One month prior to expiration of the warranties and/or guarantees, the Public Works Department will conduct a final inspection of the Project. The Contractor will be notified of any material

installed or item of work that has failed in accordance with said warranties and/or guarantees. The Contractor will repair said failures within ten (10) working days after notification.

IV. Force Account Work

A. The procedures for completing Force Account Work under this project are to be as follows:

1. Contract Specification 01020, Force Account Procedures for Coating Work. This covers work to be performed under the following specifications:

   a. Chemical Injection Grouting (Specification 02658) to seal areas of groundwater leakage.

   b. Concrete repair (Specification 03700) to repair concrete surfaces damaged by corrosion.

   The bid schedule contains separate bid items for the "Chemical Injection Grouting" and "Concrete Repair" at each pump station, as applicable.

2. Standard Specification and Special Provision 1-09.6 will apply to all other force account work performed under this project. This force account work could include miscellaneous utility relocation work that is not shown in the Contract Documents. The bid schedule includes a separate bid item for "Force Account" at each pump station.

B. The remainder of this section discusses the Force Account Procedures for Coating Work, per Specification 01020. This specification addresses the procedures that the Contractor is to follow to record and be paid for labor, equipment, and material costs used to complete chemical injection grouting or concrete repair. The following discussion summarizes some of the information presented in Specification 01020. The bidder is directed to the specification for full explanation of Force Account Procedures for Coating Work.

C. Specification 01020 discusses the basis for equipment costs to support the Force Account for Coating Work. The City desires to simplify the recording and payment for equipment used to complete the Force Account for Coating Work included in this project. The Bidder is requested to provide the following for the Force Account for Coating Work at PS-5, PS-6, and PS-10:

1. An hourly rate for Force Account Equipment Cost for each type of Force Account for Coating Work (Chemical Injection Grouting and Concrete Repair). Force Account Equipment Cost includes all equipment costs for vehicles, portable equipment, tools, etc. to accomplish this work. The Force Account Equipment Cost is also to include the Contractor's markup for project overhead, general company overhead, profit, bonding, insurance, taxes, and any other costs, including for rental equipment, associated with providing force account equipment for the work. The hours charged for Force Account Equipment cannot exceed the labor hours charged by the work crew for a particular day.

2. A daily rate for Sewage Bypass and Miscellaneous Equipment that is to include all costs to operate and maintain the sewage bypass system while the Force Account for Coating Work is being performed. This rate also includes other equipment that the Contractor may leave on site (including equipment trucks, trailers, portable shelters, etc) while the Force Account for Coating Work is being performed. The Bypass and Miscellaneous Equipment cost is also to include the Contractor's markup for project overhead, general company overhead, profit, bonding, insurance, taxes, and any other costs associated with providing Bypass and Miscellaneous Equipment during the Force Account for Coating Work.

3. The Contracting Agency has estimated and included in the Proposal, the duration for Force Account Equipment (hours) and Sewage Bypass and Miscellaneous Equipment (days) required for Chemical Injection Grouting and Concrete Repair included in this project, only to provide a common proposal for Bidders.

D. Labor costs for Force Account for Coating Work are to include the direct hourly wages plus:

1. 29% for Contractor overhead and profit
2. 12% for Contractor's management of the force account work.

E. Material costs for Force Account Coating Work are to include the raw cost plus:

1. 29% for Contractor overhead and profit
2. 12% for Contractor's management of the force account work.

F. The Contracting Agency has estimated and included in the Proposal, dollar amounts for Labor and Materials for each type of Force Account for Coating Work included in this project, only to provide a common proposal for Bidders. All such dollar amounts are to become a part of Contractor's total bid.

G. The Contracting Agency does not warrant expressly or by implication that the actual amount of force account work will correspond with the estimated time durations for equipment use, and the estimated cost for labor and materials. Payment will be made on the basis of the amount of work actually authorized by Engineer.

V. Bid Schedule

A. The Bid Schedule contains a mixture of lump sum items and unit price items. Do not include the cost for unit price items in with the cost of a lump sum item (for example, including the cost of crushed surfacing base course in the bid item for the valve vault installation). The following is an abbreviated list of unit price items included in the bid schedule:

1. Granular material for pipe bedding, trench and structure backfill, pavement patching, and foundations support.
2. Hot mix asphalt for pavement patching and overlay
3. Planing bituminous asphalt pavement
4. Cement concrete traffic curb and gutter, curb, driveway, and sidewalk for site restoration
5. Topsoil for landscaped area restoration

B. Excavation costs are to be considered incidental to the cost of the specified backfill (crushed surfacing base course). There are no separate bid items for excavation.

C. When the bid item's description in the bid schedule state that it "includes the installation of (the work)," this is understood to include all costs associated with completing the work in accordance with the Contract Documents (including material cost).

D. The Bidder is responsible for including all costs for accomplishing the work in the various bid items comprising the bid schedule. This includes work that is not specifically mentioned in the bid schedule. The bid schedule provides a general description of the work included under each bid item. The Bidder is to organize his costs for the work under the respective bid items such that all the work specified in the Contract Documents is included in the Bidder's bid.

BIDDER'S CHECKLIST

The following forms and information must be turned in at the time of the Bid opening:

1. Proposal (page LD-14), certify receipt of addenda (if any) in the space provided in the second paragraph.

2. Bid Schedule (page LD-15 to page LD-32)

3. Bidder's Qualifications Criteria (page LD-33)

4. Bidder's Proposed Subcontractors (page LD-35)

5. Noncollusion Certificate (page LD-36), notary required.

6. Certificate as to Corporate Principal (page LD-37), notary required.

7. Bid Bond Form (page LD-38), attach Power of Attorney.

PROPOSAL

City of Fife -Project: **PS-10 Rehabilitation / PS-5 and PS-6 Wetwell Coating**
5411 23rd Street E
Fife, Washington 98424 Date: _____

Total Bid Amount Including Tax (from page LD-32)**: $**_____

The undersigned, as Bidder, declare that we have personally examined the Project sites in the City of Fife, and all of the plans, specifications, and Contract Documents herein contained, and that we will contract with the City of Fife on the form of agreement provided herewith to do everything necessary to perform and complete construction called for in the Contract for the construction of the Project listed above, at the price and on the terms and conditions herein contained in the Contract Documents. Total price for the Contract has been written in words followed by numbers in parentheses.

We agree that the following shall form a part of this proposal: Proposed Subcontractors, Non-Collusion Certificate, and Certificate as to Corporate Principal. We acknowledge that addenda numbers _____ to _____ have been delivered to us and have been examined as part of the Contract Documents.

Attached is a proposal guaranty bond duly completed by a guaranty company authorized to carry on business in the state of Washington in the amount of at least five percent (5%) of the total amount of our proposal.

If our proposal is accepted, we agree to sign the Contract and to furnish the performance bond and the required evidence of insurance within ten (10) calendar days after receiving written notice of the award of the Contract. We acknowledge that the City of Fife may forfeit our bid deposit as liquidated damages in the event of our non-compliance with the requirements of this paragraph.

The Bidder agrees to prosecute the work in accordance with this Document and the Contract Documents. Bidder further agrees to complete the Project within the allotted time as specified in the Contract.

The Bidder understands that the Owner reserves the right to reject any and all proposals, as well as increase or decrease the scope of work, in accordance with **Section 1-04 of the 2014 WSDOT/APWA** *Standard Specifications for Road, Bridge, and Municipal Construction*.

_____	_____
Bidder	Telephone
_____	_____
By Authorized Official	
_____	_____
Date	
_____	_____
Contractor's Registration No.	Business Address

All blank lines must be filled in to constitute a completed Bid Form.

BID SCHEDULE,
PS-10 REHABILITATION / PS-5 AND PS-6 WETWELL COATING

PS-10 Rehabilitation						
Item No.	**Reference**	**Item Description**	**Qty**	**Units**	**Unit Price**	**Total Price**
10.1	Standard Spec 1-09.7	Mobilization	1	L.S.		
10.2	Special Provision 1-09.6, Contract Drawings	Force Account	1	F.A.	$40,000	$40,000
10.3	Standard Spec and Special Provision 1-10	Project Temporary Traffic Control	1	L.S.		
10.4	Standard Spec and Special Provision 8-01	Erosion/Water Pollution Control	1	L.S.		
10.5	Standard Spec and Special Provision 2-01, and Contract Drawings.	Clearing, Grubbing, and Roadside Cleanup: Clear and grub existing PS-10 site.	1	L.S.		
10.6	Standard Spec and Special Provision 2-02, and Contract Drawings	Removal of Structures and Obstructions Includes all demolition work at the pump station site as well as for the water system improvements to the east and west of the pump station. Remove existing valve vault, buried piping and conduit, electrical equipment, and pumps and piping from the wetwell. Remove cover slab over wetwell, and upper portion of the wetwell wall. Remove pavement, curb and gutter. Includes all other specified demolition work and hauling/disposal costs.	1	L.S.		
10.7	Special Provision Division 10, Contract Electrical Drawings, Contract Specification 16000, and Letter of Agreement, Appendix F.	TPU Power Relocation: Install primary and secondary vaults and conduit to route primary power around the pump station site, as well as serve the pump station with 480 V power. Includes meter base and coordination with Tacoma Power on the inspection of the work.	1	L.S.		

Item No.	Reference	Item Description	Qty	Units	Unit Price	Total Price
10.8	Special Provision 7-16, Contract Civil Drawings, City Stnd Details for Water (Appendix J)	Water System Improvements (West): Install 12-inch dia. gate valve on water main. Install 2-inch RPBA in hot box downstream of the existing water meter, and reconnect the outlet from the RPBA to the existing 2-inch service line.	1	L.S.		
10.9	Special Provision 7-16, Contract Civil Drawings, City Stnd Details for Water (Appendix J)	Water System Improvements (East): Install 12-inch dia. gate valve on water main. Install 2-inch water service complete with service tap, water meter, RPBA in hot box, and connection to an existing 2-inch service line. Install water sampling station, complete with service tap.	1	L.S.		
10.10	Standard Spec 2-09.3(3)D, Contract Civil Drawings	Shoring, PS-10: Install shoring between the pump station site and Industry Drive to allow the installation of the valve vault and associated piping. Remove shoring after backfilling excavation. Also includes any other shoring necessary to accomplish the work.	1	L.S.		
10.11	Contract Specification 02105 and the Contract Drawing C-102.	Installation of the Sewage Bypass System: Includes the bypass sewer plugs and temporary piping manifold within the existing 6 ft diameter wetwell. Includes installing temporary suction hose from the piping manifold to the bypass pumps, and temporary discharge hose from the bypass pumps to the specified forcemain connection at the western side of the pump station site.	1	L.S.		

Item No.	Reference	Item Description	Qty	Units	Unit Price	Total Price
10.12	Contract Specification 02105	Sewage Bypass System Operation: Rental and O&M cost for temporary bypass pumps, pump controls, piping, valving, sewer plugs, etc. for the duration of the bypass activity (except during Force Account for Coating Work, which will be paid under the "Bypass and Miscellaneous Equipment Cost" bid item per Contract Specification 01020).	1	L.S.		
10.13	Contract Specification 09900.	Clean wetwell to provide safe work environment.	1	L.S.		
10.14	Special Provision 7-13	Dewatering, PS-10: For vault and buried pump station piping installation.	1	L.S.		
10.15	Special Provisions 7-08.3(1)C; 9-03.12(3)	Pipe Zone Bedding (pea gravel)	32	TON		
10.16	Special Provisions 2-09.4 and 7-08.3(3); Standard Spec 9-03.9(3)	Crushed Surfacing Base Course: For Pavement Patching, Trench Backfill, Structure Backfill, and Gravel Backfill for Foundations.	544	TON		
10.17	Standard Spec 9-03.9(3)	Crushed Surfacing Top Course: For Pavement Patching	9	TON		
10.18	Special Provision 5-04	Hot Mix Asphalt: HMA for pavement repair. HMA Cl ½" PG 64-22	70	TON		
10.19	Standard Spec and Special Provision 5-04.3(14)	Planing Bituminous Pavement Plane patched areas per detail on Dwg C-001.	220	S.Y.		
10.20	Contract Drawings and Specifications.	Pre-cast Concrete Valve Vault: Install new pre-cast valve vault, with cast-in-place cover slab with 6 ft x 5 ft aluminum hatch. Includes exterior coating on vault.	1	L.S.		

Item No.	Reference	Item Description	Qty	Units	Unit Price	Total Price
10.21	Contract Drawings and Specifications.	Replace Wetwell Cover Slab: Construct new cast-in-place cover slab with 3 ft x 6 ft aluminum hatch over the wetwell. Does not include the removal of the upper portion of the wetwell, which is under the "Removal of Structures and Obstructions" bid item.	1	L.S.		
10.22	Contract Drawings and Specification 15085 and 15100).	Pipe Installation, PS-10: Includes all piping (buried and exposed), valves, couplings, pipe supports, and cored openings in the vault and manhole walls with mechanical seals. Includes all piping in the valve vault (including the air relief valve) and the wetwell. Includes the vent pipe from the wetwell to the vent cap on the bollard. Includes all drain piping.	1	L.S.		
10.23	Contract Drawings and Specifications.	Electrical Installation, PS-10: Includes all conduit (buried and exposed) and wiring. Includes the installation of the electrical equipment below the weather cover. Includes all electrical equipment in the valve vault. Does not include the pumps, floats, and other powered equipment in the wetwell.	1	L.S.		
10.24	Contract Drawings and Specifications.	Weather Cover: Includes a concrete slab and foundation, and the construction of the pre-engineered weather cover, including the support system for the electrical equipment.	1	L.S.		

Item No.	Reference	Item Description	Qty	Units	Unit Price	Total Price
10.25	Instructions to Bidders, Contract Specifications 01020, and 02658.	Chemical Injection Grouting: Force Account for Coating Work Equipment cost	40	Hr		
10.26		Bypass and Miscellaneous Coating Work Equipment cost	5	Day		
10.27		Labor cost	1	F.A.	$8,500	$8,500
10.28		Material cost	1	F.A.	$2,000	$2,000
10.29	Contract Specification 09900.	Concrete Surface Preparation in the Wetwell: Includes abrasive blasting or high pressure water jetting to meet SSPC SP-13, and patching depressions less than 1/2" deep with filler/surfacer.	433	S.F.		
10.30	Contract Specification 09900.	Metal Surface Preparation in the Wetwell: Sweep blast new metal pipe surfaces per SSPC SP-7 to raise a 2 mil profile.	38	S.F.		
10.31	Contract Specification 09900	Metal Surface Preparation in the Valve Vault: Sweep blast new metal pipe surfaces per SSPC SP-7 to raise a 2 mil profile.	29	S.F.		
10.32	Contract Drawings and Contract Specification 09900	Apply Metal Coatings in the Wetwell: System A-1 in Section 09900.	38	S.F.		
10.33	Contract Drawings and Contract Specification 09900	Apply Metal Coatings in the Vaults: System A-2 in Section 09900.	24	S.F.		
10.34	Contract Drawings and Contract Specification 09900	Apply Concrete Coating in the Wetwell: System A-3a or System A-3b Section 09900.	433	S.F.		

Item No.	Reference	Item Description	Qty	Units	Unit Price	Total Price
10.35	Contract Drawings and Contract Specification 11324.	New Pump Equipment: Includes submersible pumps, guide rails, and floats. Includes routing the pump cables and the float cables to the new handhole. Includes the material costs for the pump control panel (but not the installation, which is included in the Electrical Installation, PS-10 bid item).	1	L.S.		
10.36	Contract Drawings and Specification 06630.	Install FRP ladders: Install ladders in the valve vault and the wetwell.	1	L.S.		
10.37	Contract Specification 02105	Start-up Pump Station: Coordinate with the City on the start-up of the pump station. Remove the bypass plugs and PVC manifold from the wetwell (allowing flow to the wetwell). Remove the temporary connection to the forcemain and connect the new discharge pipe from the vault to the existing forcemain. Remove the bypass equipment and haul from site.	1	L.S.		
10.38	Standard Spec 8-04, Standard Plan F-10. 12-02	Cement Conc. Traffic Curb and Gutter	69	L.F.		
10.39	Standard Spec 8-04, Standard Plan F-10. 12-02	Cement Conc. Traffic Curb	10	L.F.		
10.40	Contract Drawings and Contract Specification 09900	Barrier Curb: Construct barrier curb with (5) 8-inch diameter steel bollards filled with concrete and (1) 8-inch diameter steel bollard to contain the vent line from the wetwell. Include the coating (System B-1) on the bollards. The vent pipe is to be included under the “Pipe Installation, PS-10” bid item.	1	L.S.		

Item No.	Reference	Item Description	Qty	Units	Unit Price	Total Price
10.41	Contract Drawings, Standard specification 8-14, Special Provision 8-14.5, and Standard Plans F-40.16-02 and F-45.10-01	Cement Conc. Curb Ramp Type Single Direction A	1	EA.		
10.42	Contract Drawings and Standard specification 8-14, and Standard Plan F-30.10-02	Cement Conc. Sidewalk	8	S.Y.		
10.43	Contract Drawings, Standard specification 8-06, and Standard Plan F-80.10-02.	Cement Concrete Driveway Entrance Type 1: Repair the existing driveway on the east side of the site. Repair the concrete slab on the north side of the site.	10	S.Y.		
10.44	Contract Drawings and Special Provision 8-02.3(4)	Topsoil Type A: Restore disturbed landscaped areas with 6-inch topsoil.	20	C.Y.		
				Subtotal, PS-10		

PS-5 Wetwell Coating						
Item No.	**Reference**	**Item Description**	**Qty**	**Units**	**Unit Price**	**Total Price**
5.1	Standard Spec 1-09.7	Mobilization	1	L.S.		
5.2	Special Provision 1-09.6, Contract Drawings	Force Account	1	F.A.	$10,000	$10,000
5.3	Standard Spec and Special Provision 1-10	Project Temporary Traffic Control	1	L.S.		
5.4	RCW 39.04.180	Trench Excavation Safety Systems	1	L.S.		
5.5	Standard Spec and Special Provision 2-02, and Contract Drawings	Removal of Structures and Obstructions. Removal of curb, sidewalk, AC pavement, and other items indicated for demolition.	1	L.S.		
5.6	Contract Specification 02105 and the Contract Drawings.	Installation of the Sewage Bypass System: Includes the temporary PVC piping within the bypass manhole in 20th St E, and the buried DIP from the bypass manhole to the above grade connections for the temporary bypass pumps. Includes installing temporary suction and discharge piping, including the buried crossing of the access road. Includes the temporary connection of the bypass pipe to the discharge manifold in the existing valve vault.	1	L.S.		
5.7	Contract Specification 02105	Sewage Bypass System Operation: Rental and O&M cost for temporary bypass pumps, pump controls, piping, valving, sewer plugs, etc. for the duration of the bypass activity (except during Force Account for Coating Work, which will be paid under the "Bypass and Miscellaneous Equipment Cost" bid item per Contract Specification 01020).	1	L.S.		

Item No.	Reference	Item Description	Qty	Units	Unit Price	Total Price
5.8	Special Provisions 7-08.3(1)C; 9-03.12(3)	Pipe Zone Bedding (pea gravel)	4	TON.		
5.9	Special Provisions 7-08.3(3) ; Standard Spec 9-03.9(3)	Crushed Surfacing Base Course: For Pavement Patching, Trench Backfill, Gravel Backfill for Foundations	44	TON		
5.10	Standard Spec 9-03.9(3)	Crushed Surfacing Top Course For Pavement Patching	5	TON		
5.11	Special Provision 5-04	Hot Mix Asphalt: HMA for pavement repair. HMA Cl 1/2" PG 64-22	23	TON		
5.12	Standard Specification and Special Provision 5-04.3(14)	Planing Bituminous Pavement Plane patched areas per detail on Dwg C-001.	68	S.Y.		
5.13	Contract Specification 09900.	Clean Wetwell and Vault Surfaces	1	L.S.		
5.14	Contract Specification 09900.	Remove and Dispose Existing Polyurea Coating in the Wetwell.	4,211	S.F.		
5.15	Contract Drawings and Special Provision 8-31.	Influent Line T.V. Inspection TV Inspect the 36-inch influent line to the pump station	1	L.S.		
5.16	Instructions to Bidders, Contract Specifications 01020, and 02658.	Chemical Injection Grouting: Force Account for Coating Work Equipment cost	40	Hr		
5.17		Bypass and Miscellaneous Coating Work Equipment cost	7	Day		
5.18		Labor cost	1	F.A.	$8,500	$8,500
5.19		Material cost	1	F.A.	$2,000	$2,000
5.20	Contract Specification 09900.	Concrete Surface Preparation in the Wetwell: Includes abrasive blasting or high pressure water jetting to meet SSPC SP-13, and patching depressions less than 1/2" deep with filler/surfacer.	3,808	S.F.		

Item No.	Reference	Item Description	Qty	Units	Unit Price	Total Price
5.21	Contract Specification 09900.	Metal Surface Preparation in the Wetwell: Abrasive blast metal surfaces in the wetwell to meet SSPC SP-5. Sweep blast tightly adhered existing coating per SSPC SP-7 to raise a 2 mil profile.	168	S.F.		
5.22	Contract Specification 09900.	Metal Surface Preparation in the Valve and Meter Vaults: Sweep blast tightly adhered existing coating per SSPC SP-7 to raise a 2 mil profile.	205	S.F.		
5.23	Instructions to Bidders, Contract Specifications 01020 and 03700	Concrete Repair: Fill areas that are ½" or greater in depth with the specified concrete mortar. Force Account for Coating Work Equipment Cost	40	Hr		
5.24		Bypass and Miscellaneous Coating Work Equipment cost	7	Day		
5.25		Labor cost	1	F.A.	$8,500	$8,500
5.26		Material cost	1	F.A.	$2,000	$2,000
5.27	Contract Drawings and Contract Specification 09900	Apply Metal Coating in the Wetwell: System A-1 in Section 09900.	168	S.F.		
5.28	Contract Drawings and Contract Specification 09900	Apply Metal Coating in the Vaults: System A-2 in Section 09900.	205	S.F.		
5.29	Contract Drawings and Contract Specification 09900	Apply Concrete Coating in Wetwell: System A-3a or System A-3b Section 09900.	3,808	S.F.		
5.30	Contract Drawings	Extend Drain Lines from Vaults: Extend the (2) drain lines down below the grating level in the wetwell, including SST pipe supports.	1	L.S.		

Item No.	Reference	Item Description	Qty	Units	Unit Price	Total Price
5.31	Contract Drawings and Special Provision 8-30.	Assist City with SST Slide Gate Repair: Remove 3' x 3' SST slide gate from the active wetwell and provide to City for repair. Reinstall SST slide gate following repair.	1	L.S.		
5.32	Contract Drawings and Contract Specification 11400	Civil/Mechanical Work for the Wetwell Aeration/Mixing System: Includes the installation of the mixers in the wetwell, the PVC air lines (including the pipe supports and wall penetrations) from the mixers to the blower units. Includes the concrete pad, the blower units, and the pipe support rack near the blowers.	1	L.S.		
5.33	Contract Electrical Drawing E-501, Contract Electrical Specifications, PS-5 Wetwell Coating Photos (Appendix D)	Electrical Work for the Wetwell Aeration/Mixing System: Includes the work shown on Dwg E-501. Includes the removal of a portion of the existing electrical conduit in the valve vault, and the relocation of the remaining portion of the conduit (See Photos).	1	L.S.		
5.34	Contract Specification 02105	Start-up Pump Station: Coordinate with the City on the start-up of the pump station. Remove the 36-inch plug in the upstream manhole in 20th St E. (allowing flow to the wetwell). Remove the temporary PVC piping within the upstream manhole. Remove the buried DIP and the above grade connections for the temporary bypass pumps. Remove the temporary connection to the forcemain in the valve vault. Remove the bypass equipment and haul from site.	1	L.S.		

Item No.	Reference	Item Description	Qty	Units	Unit Price	Total Price
5.35	Contract Drawings and Standard Specification 8-14, Standard Plan F-30. 10-02	Cement Conc. Sidewalk: Restore sidewalk at the bypass manhole area.	8	S.Y.		
5.36	Contract Drawings and Special Provision 8-02.3(4)	Topsoil Type A: Restore area south of sidewalk at the bypass manhole with 6-inch topsoil.	4	C.Y.		
5.37	Contract Drawings, Special Provision 8-05, Standard Plan H-60.20-01	Bollards Type 2: Construct bollards near blower pad	2	EA		
					Subtotal, PS-5	

Bid Alternative No. 1A—Cured In Place Liner for PS-5 Influent Line						
Item No.	**Reference**	**Item Description**	**Qty**	**Units**	**Unit Price**	**Total Price**
5.38	Contract Drawings and Special Provision 8-32.	Cured-In Place Pipe (CIPP) for Influent Line 36-inch diameter RCP, approximately 130 ft long.	1	L.S.		

PS-6 Wetwell Coating Rehabilitation						
Item No.	**Reference**	**Item Description**	**Qty**	**Units**	**Unit Price**	**Total Price**
6.1	Standard Spec 1-09.7	Mobilization	1	L.S.		
6.2	Special Provision 1-09.6, Contract Drawings	Force Account	1	F.A.	$10,000	$10,000
6.3	Standard Spec and Special Provision 1-10	Project Temporary Traffic Control	1	L.S.		
6.4	RCW 39.04.180	Trench Excavation Safety Systems	1	L.S.		
6.5	Standard Spec and Special Provision 2-01, and Contract Drawings.	Clearing, Grubbing, and Roadside Cleanup: Clear and grub landscaped areas identified at the PS-6 site.	1	L.S.		
6.6	Standard Spec and Special Provision 2-02, and Contract Drawings	Removal of Structures and Obstructions. Removal of curb and gutter, sidewalk, AC pavement, and other items indicated for demolition.	1	L.S.		
6.7	Contract Specification 02105 and the Contract Drawings.	Installation of the Sewage Bypass System: Includes the temporary PVC piping within the bypass manhole in 20th St E, and the buried DIP from the bypass manhole to the above grade connections for the temporary bypass pumps. Includes installing temporary suction and discharge piping, and the temporary connection of the bypass pipe to the discharge manifold in the existing valve vault.	1	L.S.		

Item No.	Reference	Item Description	Qty	Units	Unit Price	Total Price
6.8	Contract Specification 02105	Sewage Bypass System Operation: Rental and O&M cost for temporary bypass pumps, pump controls, piping, valving, sewer plugs, etc. for the duration of the bypass activity (except during Force Account for Coating Work, which will be paid under the "Bypass and Miscellaneous Equipment Cost" bid item per Contract Specification 01020).	1	L.S.		
6.9	Special Provisions 7-08.3(1)C; 9-03.12(3)	Pipe Zone Bedding (pea gravel)	9	TON		
6.10	Special Provisions 7-08.3(3) ; Standard Spec 9-03.9(3)	Crushed Surfacing Base Course For Pavement patching, Trench Backfill, Gravel Backfill for Foundations	54	TON		
6.11	Standard Spec 9-03.9(3)	Crushed Surfacing Top Course for pavement repair	2	TON		
6.12	Special Provision 5-04	Hot Mix Asphalt: HMA for pavement repair. HMA Cl ½" PG 64-22	12	TON		
6.13	Standard Specification and Special Provision 5-04.3(14)	Planing Bituminous Pavement Plane patched areas per detail on Dwg C-001.	58	S.Y.		
6.14	Contract Specification 09900.	Clean Wetwell and Vault Surfaces	1	L.S.		
6.15	Contract Specification 09900.	Remove and Dispose Existing Polyurea Coating in the Wetwell.	5,000	S.F.		
6.16	Contract Drawings and Special Provision 8-31.	Influent Line T.V. Inspection TV Inspect the 36-inch influent line to the pump station.	1	L.S.		

Item No.	Reference	Item Description	Qty	Units	Unit Price	Total Price
6.17	Instructions to Bidders, Contract Specifications 01020, and 02658.	Chemical Injection Grouting Force Account for Coating Work Equipment cost	40	Hr		
6.18		Bypass and Miscellaneous Coating Work Equipment cost	7	Day		
6.19		Labor cost	1	F.A.	$8,500	$8,500
6.20		Material cost	1	F.A.	$2,000	$2,000
6.21	Contract Specification 09900.	Concrete Surface Preparation in the Wetwell: Includes abrasive blasting or high pressure water jetting to meet SSPC SP-13, and patching depressions less than 1/2" deep with filler/surfacer.	4,600	S.F.		
6.22	Contract Specification 09900.	Metal Surface Preparation in the Wetwell: Abrasive blast metal surfaces in the wetwell to meet SSPC SP-5. Sweep blast tightly adhered existing coating per SSPC SP-7 to raise a 2 mil profile.	218	S.F.		
6.23	Contract Specification 09900	Metal Surface Preparation in the Valve and Meter Vaults: Sweep blast tightly adhered existing coating per SSPC SP-7 to raise a 2 mil profile.	205	S.F.		
6.24	Instructions to Bidders, Contract Specifications 01020 and 03700	Concrete repair: Fill areas that are ½" or greater in depth with the specified concrete mortar Force Account Coating Work Equipment cost	56	Hr		
6.25		Bypass and Miscellaneous Coating Work Equipment cost	9	Day		
6.26		Labor cost	1	F.A.	$11,800	$11,800
6.27		Material cost	1	F.A.	$3,000	$3,000
6.28	Contract Drawings and Contract Specification 09900	Apply Metal Coating in the Wetwell: System A-1 in Section 09900	218	S.F.		

Item No.	Reference	Item Description	Qty	Units	Unit Price	Total Price
6.29	Contract Drawings and Contract Specification 09900	Apply Metal Coating in the Vaults: System A-2 in Section 09900	205	S.F.		
6.30	Contract Drawings and Contract Specification 09900	Apply Concrete Coating in the Wetwell: System A-3a or System A-3b Section 09900.	4,600	S.F.		
6.31	Contract Drawings	Extend Drain Lines from Vaults: Extend the (2) drain lines down below the grating level in the wet-well, including SST pipe supports.	1	L.S.		
6.32	Contract Drawings and Special Provision 8-30.	Assist the City with SST Slide Gate Repair: Remove 3' x 3' SST slide gate from the active wetwell and provide to City for repair. Reinstall SST slide gate following repair.	1	L.S.		
6.33	Contract Drawings and Contract Specification 11400	Civil/Mechanical Work for the Wetwell Aeration/Mixing System: Includes the installation of the mixers in the wetwell, the PVC air lines (including the pipe supports and wall penetrations) from the mixers to the blower units. Includes the concrete pad and the blower units.	1	L.S.		
6.34	Contract Electrical Drawing E-601, Contract Electrical Specifications, PS-6 Wetwell Coating Photos (Appendix E)	Electrical Work for the Wetwell Aeration/Mixing System: Includes the work shown on Dwg E-601 to support the wetwell aeration/mixing system. Includes the removal of a portion of the existing electrical conduit in the valve vault, and the protection, or relocation of the remaining por-tion of the conduit (See Photos).	1	L.S.		

Item No.	Reference	Item Description	Qty	Units	Unit Price	Total Price
6.35	Contract Drawings and Contract Specification 17200	Magnetic Flow Meter Replacement: Includes the work shown on Dwg E-601 to support the replacement of the magnetic flow meter. Remove the existing 20" diameter magnetic flow meter in the meter vault and install a new 20" magnetic flow meter, complete with new flow transmitter mounted in the existing electrical equipment shed, and interconnecting conduit and wiring.	1	L.S.		
6.36	Contract Specification 02105	Start-up Pump Station: Coordinate with the City on the start-up of the pump station. Remove the 36-inch plug in the upstream manhole in 20th St E. (allowing flow to the wetwell). Remove the temporary PVC piping within the upstream manhole. Remove the buried DIP and the above grade connections for the temporary bypass pumps. Remove the temporary connection to the forcemain in the valve vault. Remove the bypass equipment and haul from site.	1	L.S.		
6.37	Standard Spec 8-04, Standard Plan F-10.12-02	Cement Conc. Traffic Curb and Gutter	11	L.F.		
6.38	Standard specification 8-14, Standard Plan F-30. 10-02	Cement Conc. Sidewalk	6	S.Y.		
6.39	Contract Drawings and Special Provision 8-02.3(4)	Topsoil Type A: Restore landscaped areas with 6"topsoil	8	C.Y.		
6.40	Contract Drawings, Special Provision 8-05, Standard Plan H-60.20-01	Bollards Type 2: Construct bollards near blower pad	2	EA		
					Subtotal, PS-6	

Bid Alternative No. 1B—Cured In Place Pipe (CIPP) for PS-6 Influent Line						
Item No.	**Reference**	**Item Description**	**Qty**	**Units**	**Unit Price**	**Total Price**
6.40	Contract Drawings and Special Provision 8-31.	Cured-In Place Pipe (CIPP) for Influent Line 36-inch diameter RCP, approximately 20 ft long.	1	L.S.		

Subtotal (Subtotal PS-10 + Subtotal PS-5 + Subtotal PS-6) $_____

Washington State Sales Tax (9.4%) $_____

Total bid $_____

Bid Alternative No. 1A --Cured In Place Liner for PS-5 Influent Line $_____

Bid Alternative No. 1B -- Cured In Place Liner for PS-6 Influent Line $_____

BIDDER'S QUALIFICATIONS CRITERIA

The Contracting Agency has established project specific supplemental criteria, in accordance with RCW 39.04.350(2), for determining Bidder responsibility, including the basis for evaluation and the deadline for appealing a determination that a Bidder is not responsible. These criteria are contained below and listed in the Advertisement for Bid:

Coating Work:

1. Name and Address of company doing the coating work:

   _____

   _____

   _____

2. State of Washington Registration No. _____Expires: ___/___/___ mo day yr
3. Provide the information below on two projects completed since 2010 that included a minimum of 1,000 square feet of epoxy-based or polyurethane-based concrete coating:
   a. Owner Name:
   b. Project Name:
   c. Contact Name, Title:
   d. Contact e-mail, and telephone number:
   e. Type Coating, Manufacturer:
   f. Area Coated (approximate):
   g. Dry Film Thickness (mils):

Pump Station/Dewatering Work:

1. Name and Address of company doing the pump station/dewatering work:

   _____

   _____

   _____

2. State of Washington Registration No. _____Expires: ___/___/___ mo day yr
3. Provide the information below on two projects completed since 2010 that included excavation for a pump station structure in a high groundwater area requiring the installation of a dewatering system (sump-only systems excluded). The pump station work is to have included the installation of pumps, piping, and electrical equipment.

a. Owner Name:

b. Project Name:

c. Contact Name, Title:

d. Contact e-mail, and telephone number:

e. Structure Description:

f. Pump Station Capacity (gpm):

g. Approximate dimensions/depth:

h. Approximate depth of groundwater:

As evidence that the Bidder meets the project specific responsibility criteria above, the apparent two lowest Bidders must submit to the Contracting Agency within 48 hours of the official bid tabulation by the City the information requested above.

If the Contracting Agency determines the apparent low Bidder does not meet the project specific bidder responsibility criteria as defined above and is therefore not a responsible Bidder, the Contracting Agency shall notify the Bidder in writing, with the reasons for its determination. If the Bidder disagrees with this determination, it may appeal the determination within 24 hours of receipt of the Contracting Agency's determination by presenting its appeal to the Contracting Agency. The Contracting Agency will consider the appeal before issuing its final determination. If the final determination affirms that the Bidder is not responsible, the Contracting Agency will not execute a contract with any other Bidder until at least two business days after the Bidder determined to be not responsible has received the final determination.

BIDDER'S PROPOSED SUBCONTRACTORS

The following list identifies categories of work and firms whose subcontract will exceed ten percent of the submitted bid price. This must be submitted with the Bid.

	A. Contractor Firm Name	B. Contractor Number	C. Category	D. Amount
1.				
2.				
3.				
4.				
5.				
6.				
7.				
8.				

_____
(Contractor)

By: _____ Date: _____
(Authorized Official)

_____
(Title)

CITY OF FIFE
NONCOLLUSION CERTIFICATE

STATE OF WASHINGTON)
)ss
COUNTY OF PIERCE)

The undersigned, being duly sworn, deposes and says that the person, firm, association, co-partnership or corporation herein named, has not, either directly or indirectly, entered into any agreement, participated in any collusion, or otherwise taken any action in restraint of free competitive bidding in the preparation and submission of a proposal to the City of Fife for consideration in the award of a Contract on the improvement described as follows:

City of Fife: PS-10 Rehabilitation / PS-5 and PS-6 Wetwell Coating

_____
Name of Firm

_____
Title

_____
Signature of Authorized Member

Sworn before me this
_____ day of _____, _____.

_____
(Notary Public) (Corporate Seal)

My commission expires _____, _____.

CERTIFICATE AS TO CORPORATE PRINCIPAL

I, _____, certify that I am the _____ of the corporation named as Contractor in Agreement attached hereto; that _____ who signed said Agreement on behalf of the Contractor, was then _____ of said corporation; that said Agreement was duly signed for and in behalf of said corporation by authority of its governing body, and is within the scope of its corporate powers.

By: _____

Title: _____

State of: _____

County of: _____

being duly sworn deposes and says that he is _____ of _____.
(Name of Organization)

Subscribed and sworn before me this
_____ day of _____, _____.

_____
(Notary Public)

My commission expires: _____, _____.

BID BOND FORM

Herewith find deposit in the form of a certified check, cashier's check, cash or bid bond, in the amount of $ _____ ($_____), which is not less than five percent (5%) of the total bid.

Sign here _____

.....

BID BOND

KNOW ALL PEOPLE BY THESE PRESENTS:

That I/we, _____ as Principal, and that I/we, _____ as Surety, are held firmly bound unto the City of Fife, Washington, as Obligee, in the penal sum of $_____ ($_____), for the payment of which the Principal and the Surety bind themselves, their heirs, executors, administrators, successors, and assigns, jointly and severally, by these presents.

The condition of this obligation is such that if the Obligee shall make any award to the Principal for the **PS-10 Rehabilitation / PS-5 and PS-6 Wetwell Coating** according to the terms of the proposal or bid made by the Principal thereto, and the Principal shall duly make and enter into a Contract with the Obligee in accordance with the terms of said proposal or bid and award and shall give bond for the faithful performance thereof, with Surety or Sureties approved by the Obligee; or if the Principal shall, in case of failure to do so, pay and forfeit to the Obligee the penal amount of the deposit specified in the call for bids, then this obligation shall be null and void; otherwise it shall be and remain in full force and effect and the Surety shall forthwith pay and forfeit to the Obligee, as penalty and liquidated damages, the amount of this bond.

Signed, sealed, and dated this _____ day of _____, _____.

_____
Principal

_____
Surety

Note: Power of Attorney shall be attached.

_____
Attorney in Fact

.....

Received return deposit in the sum of $_____ ($_____)

Bond No.: _____

The following forms have been provided for information, and are not required to be submitted with the bid

CONTRACT

THIS Agreement, made effective as of the _____ day of _____, 2014, between

CITY OF FIFE, WASHINGTON **("OWNER")**
5411 23rd Street East
Fife, WA 98424

Contact: Tel: Fax:

and

_____ **("CONTRACTOR")**

Contact: Tel: Fax:

Tax Id No.:

for the following Project:

PS-10 Rehabilitation / PS-5 and PS-6 Wetwell Coating ("PROJECT")

The Owner and Contractor agree as follows:

1. Contract Documents. The Contractor shall complete the Project in accordance with the Contract Documents. The Contract Documents consist of the following in order of precedence:

a. Addenda
b. Contract Form
c. Proposal Form
d. Instructions to Bidders
e. Special Provisions
f. Contract Drawings
g. Contract Specifications
h. PS-10 Rehabilitation / PS-5 and PS-6 Wetwell Coating Photos
i. Amendments to the 2014 WSDOT Standard Specifications Book
j. 2014 WSDOT Standard Specifications for Road, Bridge, and Municipal Construction, except Sections 1-04.2, 1-08.9, 1-08.10(1) – (4), 1-09.11, and 1-09.13.
k. Contracting Agency's Standard Plans or Details (if any).
l. WSDOT Standard Plans for Road, Bridge, and Municipal Construction

The intent of the Contract Documents is to include all items necessary for the proper execution and completion of the Project by the Contractor. These Contract Documents complement each other in describing a complete work. Any requirement in one document binds as if stated in all. The Contractor shall provide any work or materials clearly implied in the Contract even if the Contract does not mention it specifically. If any part of the

contract requires work that does not include a description of how the work will be performed, the work shall be performed in accordance with standard trade practices.

2. Date of Commencement and Physical Completion Date. The Contractor shall physically complete the Project within **260 working days** from receipt of the Notice to Proceed.

3. Contract Sum. Subject to additions and deductions by change order, the contract sum is the bid amount of $_____, including applicable tax. The contract sum shall include all items and services necessary for the proper execution and completion of the Project.

4. Liquidated Damages. Timely performance and completion of the Project is essential to Owner and time limits are of the essence. In the event Contractor fails to physically complete the work in 260 working days, plus any authorized extensions thereof, the Contractor shall pay Owner liquidated damages of $1,000.00 for each calendar day of delay in completion of the Project. No deduction or payment of liquidated damages will, in any degree, release the Contractor from further obligations and liabilities to complete the entire contract.

5. Changes. After execution of the Contract, changes in the Project may be accomplished by change order. Owner, without invalidating the Contract, may order changes in the Project within the general scope of the Contract consisting of additions, deletions or other revisions, the Contract Sum and Contract completion date being adjusted accordingly. Change orders shall be in writing signed by the parties.

6. Payment and Performance Bond. Contractor shall make, execute, and deliver a good and sufficient bond equal to the amount of the full contract price with a surety company as surety, conditioned that Contractor shall faithfully perform all the provisions of this contract and pay all laborers, mechanics, and subcontractors and material men and all persons who supply such person or persons, or subcontractors, with provisions and supplies for the carrying on of such work, in the form included in the bid documents. This bond shall be filed with the Owner. The surety must agree to be bound by the laws of the State of Washington and subject to the jurisdiction of the State of Washington.

7. Permits, Fees, Notices, and Compliance with Laws.

7.1 Unless otherwise provided in the Contract Documents, the Contractor shall secure and pay for all permits, fees, licenses and inspections by governmental agencies necessary for the proper execution and completion of the Work that are customarily secured after execution of the Contract and legally required at the time bids are received or negotiations concluded.

7.2 Contractor shall comply with and give notices required by applicable laws, statutes, ordinances, codes, rules, and regulations, and lawful orders of public authorities applicable to performance of the Work.

7.3 Contractor shall obtain a City of Fife business license pursuant to the provisions of Chapter 5.01 FMC prior to receipt of written Notice to Proceed.

8. Trench Excavation Safety. Contractor shall provide adequate safety systems for trench excavation that meets all requirements of the Washington Industrial Safety and Health Act, Chapter 49.17 RCW.

9. Termination of Contract. This Contract may be terminated by Owner at any time upon the default of the Contractor or upon public convenience, in which Contractor shall be entitled to just and equitable compensation for any satisfactory work completed prior to the date of termination. Contractor shall not be entitled to any reallocation of cost, profit or overhead. Contractor shall not in any event be entitled to anticipated profit on work not performed because of such termination. Contractor shall use its best efforts to minimize the compensation payable under this Contract in the event of such termination. If the contract is terminated for default, the Contractor shall not be entitled to receive any further payments under the contract

until all work called for has been fully performed. Any extra cost or damage to Owner resulting from such default(s) shall be deducted from any money due or coming due to the Contractor. The Contractor shall bear any extra expenses incurred by Owner in completing the work, including all increased costs for completing the work, and all damage sustained, or which may be sustained by Owner by reason of such default.

10. Warranty Contractor warrants that: (1) materials and equipment furnished under the Contract will be new and of good quality unless otherwise required and permitted by the Contract Documents; (2) the Work will be free from defects not inherent in the quality required or permitted; and (3) the Work will conform to the requirements of the Contract. The Contractor further agrees to correct any defects in materials, workmanship, or installation of the Work which shall develop or be discovered within one (1) year after final acceptance of the Work.

11. Indemnification/Hold Harmless. The Contractor shall defend, indemnify and hold Owner, its officers, officials, employees and volunteers harmless from any and all claims, injuries, damages, losses or suits including attorney fees, arising out of or in connection with the performance of this Agreement, except for injuries and damages caused by the sole negligence of Owner. Should a court of competent jurisdiction determine that this Agreement is subject to RCW 4.24.115, then, in the event of liability for damages arising out of bodily injury to persons or damages to property caused by or resulting from the concurrent negligence of the Contractor and Owner, its officers, officials, employees, and volunteers, the Contractor's liability hereunder shall be only to the extent of the Contractor's negligence. It is further specifically and expressly understood that the indemnification provided herein constitutes the Contractor's waiver of immunity under Industrial Insurance, Title 51 RCW, solely for the purposes of this indemnification. This waiver has been mutually negotiated by the parties. The provisions of this section shall survive the expiration or termination of this Agreement.

12. Independent Contractor. Contractor is and shall be at all times during the term of this Agreement an independent contractor.

13. Disputes. Any action for claims arising out of or relating to this Agreement shall be governed by the laws of the State of Washington. Venue shall be in Pierce County Superior Court.

14. Attorneys Fees. In any suit or action instituted to enforce any right granted in this Agreement, the substantially prevailing party shall be entitled to recover its costs, disbursements, and reasonable attorneys fees from the other party.

15. Extent of Agreement/Modification. This Agreement, together with attachments or addenda, represents the entire and integrated Agreement between the parties hereto and supersedes all prior negotiations, representations, or agreements, either written or oral. This Agreement may be amended, modified or added to only by written instrument properly signed by both parties.

OWNER: CITY OF FIFE	CONTRACTOR:
By: _____ David K. Zabell, City Manager	By: _____
	Name: _____
Date: _____	Title: _____
	Date: _____

PERFORMANCE & PAYMENT BOND WITH GUARANTY

Name of Project: **PS-10 Rehabilitation / PS-5 and PS-6 Wetwell Coating**

Contractor (Principal) _____

Project/Contract # _____

Surety _____

Bond Amount $_____

Bond #_____

1. Date and Parties

This performance and payment bond with guaranty is dated, for reference purposes only, the _____ day of _____, 20__ and is executed by _____ _____, as Principal(s), and _____, as Surety.

2. General Recitals

A. Principal has entered into a public works contract (the "Contract") with the City of Fife for certain work described as follows:

PS-10 Rehabilitation Project / PS-5 and PS-6 Wetwell Coating

(the "Work").

B. This bond is furnished in accordance with RCW 39.08 to secure faithful performance of the Contract and payment of all persons covered under RCW 39.08.010.

3. Bond Amount

The Principal and the Surety agree and do jointly and severally bind themselves, their heirs, executors, administrators, and assigns, unto the City in the sum of _____ dollars ($ _____).

4. Agreement to Perform

A. Principal, his or its heirs, executors, administrators, successors, or assigns, shall abide by, and well and truly keep and perform the covenants, conditions and agreements in the Contract, and shall faithfully perform all the provisions of the Contract and shall also well and truly perform and fulfill all the undertakings, covenants, terms, conditions and agreements of any and all duly authorized modifications of the Contract that may hereafter be made, at the time and in the manner therein specified.

B. Principal shall pay all laborers, mechanics, and subcontractors and material suppliers, and all persons who shall supply such person or persons, or subcontractors, with provisions and supplies for the carrying on of such Work.

C. The Principal further agrees to correct any defects in materials, workmanship, or installation of the Work which shall develop or be discovered within one (1) year after final acceptance of the Work.

5. Indemnity Agreement

A. The Principal hereby agrees to indemnify and hold the City harmless from any and all claims that may be made against the City resulting directly or indirectly from any action or inaction of the Principal or his agents, employees or independent contractors relating directly or indirectly to work performed or to be performed under the terms of this agreement. This indemnity and hold harmless shall include City Costs related to defending against said claims, or in enforcing the terms of this agreement.

B. For purposes of this document, the term "City Costs" shall mean all City expenditures, obligations or debt incurred, including, but not limited to: construction, labor, equipment and material costs; City staff time; legal consultant fees; engineering consultant fees; financial consultant fees; publication, service or process and filing fees; mailing fees; cost of right-of way, real property and easement acquisition; and fees and costs to other governmental jurisdictions, that are made or incurred by the City, whether or not legal action is commenced.

6. Obligation of Surety

A. If the Principal (or any of the employees, subcontractors, or lower tier subcontractors of the Principal) fails to abide by, and well and truly keep and perform the covenants, conditions and agreements in the Contract, or fails to faithfully perform any of the provisions of the Contract or fails to well and truly perform and fulfill any of the undertakings, covenants, terms, conditions and agreements of any and all duly authorized modifications of the Contract that may hereafter be made, at the time and in the manner therein specified, then the Surety shall be liable to the City for City Costs resulting from said failure to perform, but not to exceed the Bond amount.

B. If the Principal (or any subcontractors or lower tier subcontractors of the Principal) fails to pay any laborers, mechanics, or subcontractors or material suppliers, and all persons who shall supply such person or persons, or subcontractors, with provisions and supplies for the carrying on of such Work, then the Surety shall be liable to the City for City Costs resulting from such failure to pay and to the persons covered by RCW 39.08.010, but not to exceed the Bond amount.

C. If the Principal fails to correct any defects in materials, workmanship, or installation of the Work which shall develop or be discovered within one (1) year after final acceptance of the Work, then the Surety shall be liable to the City for City Costs resulting from such failure, but not to exceed one tenth of the Bond amount.

D. The Surety agrees that no change, extension of time, alteration or addition to the terms of the contract or to the Work to be performed thereunder or the specifications accompanying the same shall in any way affect its obligation on this Bond, and it does hereby waive notice of any change, extension of tie, alterations or additions to the terms of the Contract or the Work or to the specifications.

E. The Surety agrees that modifications and changes may be made in the terms and provisions of the Contract without notice to Surety, and any such modifications or changes increasing the total amount to be paid to the Principal shall automatically increase the obligation of the Surety on this Bond in a like amount. However, such increase shall not exceed twenty-five percent (25%) of the original amount of this Bond without the consent of the Surety.

7. Address for Notices

All notices required hereunder shall be considered properly delivered when personally delivered, when received by facsimile, or on the third day following mailing, postage prepaid, certified mail, return receipt requested, to:

Principal:	Surety:
_____	_____
Name	Name
_____	_____
Street address	Street address
_____	_____
City, State and zip code	City, state and zip code
_____	_____
Facsimile number	Facsimile number

8. Default

A. If the Principal (or any of the employees, subcontractors, or lower tier subcontractors of the Principal) fails to faithfully, fully, and timely perform the Contract or any amendments thereto as required hereunder, or fails to pay any laborers, mechanics, or subcontractors or material suppliers, or any persons who shall supply such person or persons, or subcontractors, with provisions and supplies for the carrying on of such Work, then the City shall notify the Principal and the Surety that such failures must be cured to the satisfaction of the City Public Works Department within seven days from the date of the Notice, or such longer time as may be determined by the City Public Works Director. If the failures are not so cured and approved within the period stated in the notice then the Surety, upon written demand by the City, shall immediately tender to the City the full amount of the Bond (less any amount previously paid to claimants in accordance with RCW 39.08) and the City will complete the Work and/or make the payments, as the case may be, deduct from the amount tendered the City Costs, and refund the remainder, if any, to the Surety.

B. If the Principal fails to correct any defects in materials, workmanship, or installation of the Work, as required hereunder, then the City shall notify the Principal and Surety that the Work must be corrected to the satisfaction of the City Public Works Department within seven days from the date of the Notice, or such longer time as may be determined by the City Public Works Director. If the Work is not corrected and approved within the period stated in the notice, then the Surety, upon written demand by the City, shall immediately tender to the City one tenth of the Bond amount (or the total amount remaining on the Bond whichever is less), and the City will correct the Work, and deduct from the amount tendered the City Costs. The City shall retain the remainder until the end of the warranty period. If at the end of the warranty period the

tendered monies have not been expended for City Costs associated with correction of Work, then the remaining amount shall be refunded to the Surety.

C. If the amount of the Bond is inadequate to pay for City Costs, either because the City Costs exceed the Bond amounts or the Surety is no longer solvent or fails to timely tender the appropriate amount, then the City shall forthwith notify the Principal and he shall tender the deficiency to the City within five days of said notification. If the City commences legal action to collect said deficiency then the prevailing party in said legal action shall be entitled to judgment for their reasonable costs and attorney fees incurred therein. Each Principal is jointly and severally liable for the obligations set forth herein.

9. Action by Claimants.

A. All such persons mentioned in RCW 39.08.010 shall have a right of action in his, her, or their own name or names on the Bond for work done by such laborers or mechanics, and for materials furnished or provisions and goods supplied and furnished in the prosecution of the Work: PROVIDED, That such persons shall not have any right of action on this Bond for any sum whatever, unless within thirty days from and after the completion of the Contract with an acceptance of the Work by the City Council, the laborer, mechanic or subcontractor, or material supplier, or person claiming to have supplied materials, provisions or goods for the prosecution of such Work, shall present to and file with the City a notice in writing in accordance with RCW 39.08.030.

B. Every person, firm or corporation furnishing materials, supplies or provisions to be used in the construction, performance, carrying on, prosecution or doing of any of the Work, shall, not later than ten days after the date of the first delivery of such materials, supplies or provisions to any subcontractor or agent of any person, firm or corporation having a subcontract for the construction, performance, carrying on, prosecution or doing of such Work, deliver or mail to the Principal a notice in writing stating in substance and effect that such person, firm or corporation has commenced to deliver materials, supplies or provisions for use thereon, with the name of the subcontractor or agent ordering or to whom the same is furnished and that the Principal and the Bond will be held for the payment of the same, and no suit or action shall be maintained in any court against the Principal or this Bond to recover for such material, supplies or provisions or any part thereof unless the provisions of this section and RCW 39.08.065 have been complied with.

10. Modification.

This document cannot be modified, nor the obligations created hereunder terminated, without the City's express written consent.

11. Governing Law--Venue.

Any action for claims arising out of or relating to this Agreement shall be governed by the laws of the State of Washington. Venue shall be in Pierce County Superior Court.

PRINCIPAL:

_____

By:_____

Title _____

SURETY:

_____

By:_____

Title _____

PRINCIPAL:

_____

By:_____

Title _____

Accepted by the City this _____ day of

_____, 20__.

By:_____

Title _____

[Power of Attorney must be attached to Bond]

+

SPECIAL PROVISIONS

TABLE OF CONTENTS

DIVISION 1: GENERAL REQUIREMENTS 2
DESCRIPTION OF WORK 2
1-01 DEFINITIONS AND TERMS 2
1-02 BID PROCEDURES AND CONDITIONS 4
1-03 AWARD AND EXECUTION OF CONTRACT 8
1-04 SCOPE OF WORK 9
1-05 CONTROL OF WORK 10
1-07 LEGAL RELATIONS AND RESPONSIBILITIES TO THE PUBLIC 13
1-08 PROSECUTION AND PROGRESS 22
1-09 MEASUREMENT AND PAYMENT 25
1-10 TEMPORARY TRAFFIC CONTROL 27
DIVISION 2: EARTHWORK 30
2-01 CLEARING, GRUBBING, AND ROADSIDE CLEANUP 30
2-02 REMOVAL OF STRUCTURES AND OBSTRUCTIONS 30
2-09 STRUCTURE EXCAVATION 31
2-11 TRIMMING AND CLEANUP 32
DIVISION 5: SURFACE TREATMENTS AND PAVEMENTS 33
5-04 HOT MIX ASPHALT 33
DIVISION 7: DRAINAGE STRUCTURES, STORM SEWERS, SANITARY SEWERS, WATER MAINS, AND CONDUITS 36
7-00 GENERAL MATTERS 36
7-05 MANHOLES, INLETS, CATCH BASINS, AND DRYWELLS 36
7-08 GENERAL PIPE INSTALLATION REQUIREMENTS 36
7-13 DEWATERING PS-10 37
7-16 WATER SYSTEM IMPROVEMENTS 42
DIVISION 8: MISCELLANEOUS CONSTRUCTION 44
8-01 EROSION CONTROL AND WATER POLLUTION CONTROL 44
8-02 ROADSIDE RESTORATION 46
8-05 BOLLARDS 47
8-30 ASSIST CITY WITH SST SLIDE GATE REPAIR 48
8-31 INFLUENT LINE INSPECTION 49
8-32 BID ALTERNATIVE NO.1--CURED IN PLACE PIPE (CIPP) FOR INFLUENT LINE 50
DIVISION 9: MATERIALS 54
9-03 AGGREGATES 54
DIVISION 10: TACOMA PUBLIC UTILITIES SPECIAL PROVISIONS 55
10-01 DESCRIPTION OF WORK 55

10-02 LOCATION 56
10-03 QUALIFICATIONS OF CONTRACTORS 56
10-04 WORK TO BE PERFORMED BY THE CONTRACTOR 56
10-05 WORK TO BE PERFORMED BY TPU 56
10-06 COORDINATION WITH TPU 57
10-07 SPECIFICATIONS AND DRAWINGS 57
10-08 TYPICAL CONTRACT DRAWINGS 57
10-09 PERSONS TO BE CONTACTED 58
10-10 INSPECTION 58
10-11 PRE-CAST CONCRETE/FIBERGLASS STRUCTURES 59
10-12 TRENCH EXCAVATION, BACKFILL, AND COMPACTION 60
10-13 INSTALL CONDUIT AND FITTINGS 61

INTRODUCTION TO THE SPECIAL PROVISIONS

(July 31, 2007 APWA GSP)

The work on this project shall be accomplished in accordance with the *Standard Specifications for Road, Bridge and Municipal Construction*, 2014 edition, as issued by the Washington State Department of Transportation (WSDOT) and the American Public Works Association (APWA), Washington State Chapter (hereafter "Standard Specifications"). The Standard Specifications, as modified or supplemented by the Amendments to the Standard Specifications and these Special Provisions, all of which are made a part of the Contract Documents, shall govern all of the Work.

These Special Provisions are made up of both General Special Provisions (GSPs) from various sources, which may have project-specific fill-ins; and project-specific Special Provisions. Each Provision supplements, modifies, or replaces the comparable Standard Specification, or is a new Provision. The deletion, amendment, alteration, or addition to any subsection or portion of the Standard Specifications is meant to pertain only to that particular portion of the section, and in no way should it be interpreted that the balance of the section does not apply.

The GSPs are labeled under the headers of each GSP, with the date of the GSP and its source, for example:

(May 18, 2007 APWA GSP)

The project-specific Special Provisions are labeled as follows:

(******)

Also incorporated into the Contract Documents by reference are:

- *Manual on Uniform Traffic Control Devices for Streets and Highways*, currently adopted edition, with Washington State modifications, if any
- *Standard Plans for Road, Bridge and Municipal Construction*, WSDOT/APWA, current edition

Contractor shall obtain copies of these publications, at Contractor's own expense.

DIVISION 1: GENERAL REQUIREMENTS

DESCRIPTION OF WORK

This Contract provides for improvements at three City wastewater pump stations, including the rehabilitation of PS-10, and the replacement of the existing wetwell coating and other miscellaneous improvements at PS-5 and PS-6, in accordance with the attached Contract Plans, these Contract Provisions, the Standard Specifications, and the Contract Specifications.

These Contract Documents describe the work in its entirety, and a more complete project description is presented in Section 01010, Summary of Work. The work consists of the installation of temporary sewage bypass pumping systems at each of the pump station sites to isolate the wetwell for the rehabilitation work. The PS-10 Rehabilitation portion of this project includes the relocation of utilities, the installation of a new valve vault, and the complete replacement of the existing submersible pumps and piping, as well as the existing electrical system. The PS-10 Rehabilitation also includes coating the wetwell concrete and piping (as well as the valve vault piping) with the same coating systems specified for PS-5 and PS-6.

The PS-5 and PS-6 Wetwell Coating portion of this project includes the removal of the existing concrete coating in the wetwells, the patching and repair of damaged concrete areas, and the sealing (with pressure-injected grout) of any areas in the wetwell that show evidence of groundwater leakage. After confirmation of proper repair, grouting, and surface preparation of the concrete surfaces, the specified fiber-reinforced epoxy coating or the alternative polyurethane system is to be applied to the exposed concrete surfaces in the wetwell. The coating work also includes the sandblasting and coating of the ductile iron piping in the wetwell and in the valve and meter vaults with a high-build epoxy system. The work at PS-5 and PS-6 also includes miscellaneous improvements including the installation of a wetwell aeration/mixing system, and extending the drain lines from the valve and meter vaults below the grating level in the wetwell. A flow meter at PS-6 is to also to be replaced.

After acceptance of the rehabilitation work at each station, the City will reinstall the pumps and controls in the wetwell. The Contractor will then remove the temporary sewage bypass pumping system and the pump station brought back on-line (pump station operation is the responsibility of the City).

1-01 DEFINITIONS AND TERMS

1-01.3 Definitions

(March 13, 2012 APWA GSP)

Delete the heading Completion Dates and the three paragraphs that follow it, and replace them with the following:

<u>Dates</u>

Bid Opening Date
The date on which the Contracting Agency publicly opens and reads the Bids.

Award Date
The date of the formal decision of the Contracting Agency to accept the lowest responsible and responsive Bidder for the Work.

Contract Execution Date
The date the Contracting Agency officially binds the Agency to the Contract.

Notice to Proceed Date
The date stated in the Notice to Proceed on which the Contract time begins.

Substantial Completion Date
The day the Engineer determines the Contracting Agency has full and unrestricted use and benefit of the facilities, both from the operational and safety standpoint, any remaining traffic disruptions will be rare and brief, and only minor incidental work, replacement of temporary substitute facilities, plant establishment periods, or correction or repair remains for the Physical Completion of the total Contract.

Physical Completion Date
The day all of the Work is physically completed on the project. All documentation required by the Contract and required by law does not necessarily need to be furnished by the Contractor by this date.

Completion Date
The day all the Work specified in the Contract is completed and all the obligations of the Contractor under the contract are fulfilled by the Contractor. All documentation required by the Contract and required by law must be furnished by the Contractor before establishment of this date.

Final Acceptance Date
The date on which the Contracting Agency accepts the Work as complete.

Supplement this Section with the following:

All references in the Standard Specifications, Amendments, or WSDOT General Special Provisions, to the terms “State”, “Department of Transportation”, “Washington State Transportation Commission”, “Commission”, “Secretary of Transportation”, “Secretary”, “Headquarters”, and “State Treasurer” shall be revised to read “Contracting Agency”.

All references to “State Materials Laboratory” shall be revised to read “Contracting Agency designated location”.

All references to “final contract voucher certification” shall be interpreted to mean the final payment form established by the Contracting Agency.

The venue of all causes of action arising from the advertisement, award, execution, and performance of the contract shall be in the Superior Court of the County where the Contracting Agency’s headquarters are located.

Additive
A supplemental unit of work or group of bid items, identified separately in the Bid Proposal, which may, at the discretion of the Contracting Agency, be awarded in addition to the base bid.

Alternate
One of two or more units of work or groups of bid items, identified separately in the Bid Proposal, from which the Contracting Agency may make a choice between different methods or material of construction for performing the same work.

Business Day
A business day is any day from Monday through Friday except holidays as listed in Section 1-08.5.

Contract Documents
See definition for “Contract”.

Contract Time
The period of time established by the terms and conditions of the Contract within which the Work must be physically completed.

Notice of Award
The written notice from the Contracting Agency to the successful Bidder signifying the Contracting Agency’s acceptance of the Bid Proposal.

Notice to Proceed
The written notice from the Contracting Agency or Engineer to the Contractor authorizing and directing the Contractor to proceed with the Work and establishing the date on which the Contract time begins.

Traffic
Both vehicular and non-vehicular traffic, such as pedestrians, bicyclists, wheelchairs, and equestrian traffic.

1-02 BID PROCEDURES AND CONDITIONS

1-02.1 Prequalification of Bidders

Delete this Section and replace it with the following:

1-02.1 Qualifications of Bidder

(January 24, 2011 APWA GSP)

Before award of a public works contract, a bidder must meet at least the minimum qualifications of RCW 39.04.350(1) to be considered a responsible bidder and qualified to be awarded a public works project.

Add the following section to the above:

The City reserves the right to check all information provided by the bidder in the Bidder’s Qualifications Certificate to judge the adequacy of the bidder’s qualifications.

1-02.2 Plans and Specifications

(June 27, 2011 APWA GSP)

Delete this section and replace it with the following:

Information as to where Bid Documents can be obtained or reviewed can be found in the Call for Bids (Advertisement for Bids) for the work.

After award of the contract, plans and specifications will be issued to the Contractor at no cost as detailed below:

To Prime Contractor	No. of Sets	Basis of Distribution
Reduced plans (11" x 17")	4	Furnished automatically upon award.
Contract Provisions	4	Furnished automatically upon award.
Large plans (e.g., 22" x 34")	2	Furnished only upon request.

Additional plans and Contract Provisions may be obtained by the Contractor from the source stated in the Call for Bids, at the Contractor's own expense.

1-02.5 Proposal Forms

(June 27, 2011 APWA GSP)

Delete this section and replace it with the following:

The Proposal Form will identify the project and its location and describe the work. It will also list estimated quantities, units of measurement, the items of work, and the materials to be furnished at the unit bid prices. The bidder shall complete spaces on the proposal form that call for, but are not limited to, unit prices; extensions; summations; the total bid amount; signatures; date; and, where applicable, retail sales taxes and acknowledgment of addenda; the bidder's name, address, telephone number, and signature; the bidder's D/M/WBE commitment, if applicable; a State of Washington Contractor's Registration Number; and a Business License Number, if applicable. Bids shall be completed by typing or shall be printed in ink by hand, preferably in black ink. The required certifications are included as part of the Proposal Form.

The Contracting Agency reserves the right to arrange the proposal forms with alternates and additives, if such be to the advantage of the Contracting Agency. The bidder shall bid on all alternates and additives set forth in the Proposal Form unless otherwise specified.

1-02.6 Preparation of Proposal

(June 27, 2011 APWA GSP)

Supplement the second paragraph with the following:

4. If a minimum bid amount has been established for any item, the unit or lump sum price must equal or exceed the minimum amount stated.
5. Any correction to a bid made by interlineation, alteration, or erasure, shall be initialed by the signer of the bid.

Delete the last paragraph, and replace it with the following:

The Bidder shall make no stipulation on the Bid Form, nor qualify the bid in any manner.
A bid by a corporation shall be executed in the corporate name, by the president or a vice president (or other corporate officer accompanied by evidence of authority to sign).

A bid by a partnership shall be executed in the partnership name, and signed by a partner. A copy of the partnership agreement shall be submitted with the Bid Form if any D/M/WBE requirements are to be satisfied through such an agreement.

A bid by a joint venture shall be executed in the joint venture name and signed by a member of the joint venture. A copy of the joint venture agreement shall be submitted with the Bid Form if any D/W/MBE requirements are to be satisfied through such an agreement.

1-02.7 Bid Deposit

(October 1, 2005 APWA GSP)

Supplement this section with the following:

Bid bonds shall contain the following:

1. Contracting Agency-assigned number for the project;
2. Name of the project;
3. The Contracting Agency named as oblige;
4. The amount of the bid bond stated either as a dollar figure or as a percentage which represents five percent of the maximum bid amount that could be awarded;
5. Signature of the bidder's officer empowered to sign official statements. The signature of the person authorized to submit the bid should agree with the signature on the bond, and the title of the person must accompany the said signature;
6. The signature of the surety's officer empowered to sign the bond and the power of attorney.

If so stated in the Contract Provisions, bidder must use the bond form included in the Contract Provisions.

1-02.13 Irregular Proposals

(March 13, 2012 APWA GSP)

Revise item 1 to read:

1. A proposal will be considered irregular and will be rejected if:
   a. The Bidder is not prequalified <u>when so required</u>;
   b. The authorized proposal form furnished by the Contracting Agency is not used or is altered;
   c. The completed proposal form contains any unauthorized additions, deletions, alternate Bids, or conditions;
   d. The Bidder adds provisions reserving the right to reject or accept the award, or enter into the Contract;

e. A price per unit cannot be determined from the Bid Proposal;

f. The Proposal form is not properly executed;

g. The Bidder fails to submit or properly complete a Subcontractor list, if applicable, as required in Section 1-02.6;

h. The Bidder fails to submit or properly complete a Disadvantaged Business Enterprise Certification, if applicable, as required in Section 1-02.6;

i. The Bidder fails to submit written confirmation from each DBE firm listed on the Bidder's completed DBE Utilization Certification that they are in agreement with the bidders DBE participation commitment, if applicable, as required in Section 1-02.6, or if the written confirmation that is submitted fails to meet the requirements of the Special Provisions;

j The Bidder fails to submit DBE Good Faith Effort documentation, if applicable, as required in Section 1-02.6, or if the documentation that is submitted fails to demonstrate that a Good Faith Effort to meet the Condition of Award was made;

k. The Bid Proposal does not constitute a definite and unqualified offer to meet the material terms of the Bid invitation; or

l. <u>More than one proposal is submitted for the same project from a Bidder under the same or different names.</u>

1-02.14 Disqualification of Bidders

(March 25, 2009 APWA GSP, Option A; may not be used on FHWA-funded projects)

Delete this Section and replace it with the following:

A Bidder will be deemed not responsible if the Bidder does not meet the mandatory bidder responsibility criteria in RCW 39.04.350(1), as amended.

As evidence that the Bidder meets the bidder responsibility criteria above, the apparent two lowest Bidders must submit to the Contracting Agency within 24 hours of the bid submittal deadline, documentation (sufficient in the sole judgment of the Contracting Agency) demonstrating compliance with all responsibility criteria. The Contracting Agency reserves the right to request such documentation from other Bidders as well, and to request further documentation as needed to assess bidder responsibility.

If the Contracting Agency determines the Bidder does not meet the bidder responsibility criteria above and is therefore not a responsible Bidder, the Contracting Agency shall notify the Bidder in writing, with the reasons for its determination. If the Bidder disagrees with this determination, it may appeal the determination within 24 hours of receipt of the Contracting Agency's determination by presenting its appeal to the Contracting Agency. The Contracting Agency will consider the appeal before issuing its final determination. If the final determination affirms that the Bidder is not responsible, the Contracting Agency will not execute a contract with any other Bidder until at least two business days after the Bidder determined to be not responsible has received the final determination.

1-02.15 Pre Award Information

(October 1, 2005 APWA GSP)

Revise this section to read:

Before awarding any contract, the Contracting Agency may require one or more of these items or actions of the apparent lowest responsible bidder:

1. A complete statement of the origin, composition, and manufacture of any or all materials to be used,
2. Samples of these materials for quality and fitness tests,
3. A progress schedule (in a form the Contracting Agency requires) showing the order of and time required for the various phases of the work,
4. A breakdown of costs assigned to any bid item,
5. Attendance at a conference with the Engineer or representatives of the Engineer,
6. Obtain, and furnish a copy of, a business license to do business in the city or county where the work is located.
7. A copy of State of Washington Contractor's Registration, or
8. Any other information or action taken that is deemed necessary to ensure that the bidder is the lowest responsible bidder.

1-03 AWARD AND EXECUTION OF CONTRACT

1-03.3 Execution of Contract

(October 1, 2005 APWA GSP)

Revise this section to read:

Copies of the Contract Provisions, including the unsigned Form of Contract, will be available for signature by the successful bidder on the first business day following award. The number of copies to be executed by the Contractor will be determined by the Contracting Agency.

Within 10 calendar days after the award date, the successful bidder shall return the signed Contracting Agency-prepared contract, an insurance certification as required by Section 1-07.18, and a satisfactory bond as required by law and Section 1-03.4. Before execution of the contract by the Contracting Agency, the successful bidder shall provide any pre-award information the Contracting Agency may require under Section 1-02.15.

Until the Contracting Agency executes a contract, no proposal shall bind the Contracting Agency nor shall any work begin within the project limits or within Contracting Agency-furnished sites. The Contractor shall bear all risks for any work begun outside such areas and for any materials ordered before the contract is executed by the Contracting Agency.

If the bidder experiences circumstances beyond their control that prevents return of the contract documents within the calendar days after the award date stated above, the Contracting Agency may grant up to a maximum of 10 additional calendar days for return of the documents, provided the Contracting Agency deems the circumstances warrant it.

1-03.4 Contract Bond

(October 1, 2005 APWA GSP)

Revise the first paragraph to read:

The successful bidder shall provide an executed contract bond for the full contract amount. This contract bond shall:

1. Be on a Contracting Agency-furnished form;
2. Be signed by an approved surety (or sureties) that:
   a. Is registered with the Washington State Insurance Commissioner, and
   b. Appears on the current Authorized Insurance List in the State of Washington published by the Office of the Insurance Commissioner,
3. Be conditioned upon the faithful performance of the contract by the Contractor within the prescribed time;
4. Guarantee that the surety shall indemnify, defend, and protect the Contracting Agency against any claim of direct or indirect loss resulting from the failure:
   a. Of the Contractor (or any of the employees, subcontractors, or lower tier subcontractors of the Contractor) to faithfully perform the contract, or
   b. Of the Contractor (or the subcontractors or lower tier subcontractors of the Contractor) to pay all laborers, mechanics, subcontractors, lower tier subcontractors, material person, or any other person who provides supplies or provisions for carrying out the work;
5. <u>Be accompanied by a power of attorney for the Surety's officer empowered to sign the bond; and</u>
6. <u>Be signed by an officer of the Contractor empowered to sign official statements (sole proprietor or partner). If the Contractor is a corporation, the bond must be signed by the president or vice-president, unless accompanied by written proof of the authority of the individual signing the bond to bind the corporation (i.e., corporate resolution, power of attorney or a letter to such effect by the president or vice-president).</u>

1-04 SCOPE OF WORK

1-04.1(2) Bid Items Not Included in the Proposal

(******)

This section is to be deleted in its entirety and replaced with the following:

The Contractor shall include all costs of doing the work within the bid item prices. If the Contract Plans, Contract Provisions, Addenda, or any other part of the Contract requires work that has no specific bid item in the Proposal form, the entire cost of that work shall be considered incidental and included within other bid items in the Proposal.

1-04.6 Variation in Estimated Quantities

(May 25, 2006 APWA GSP, Option B; may not be used on FHWA-funded projects)

Delete the first paragraph, and replace it with the following:

Payment to the Contractor will be made only for the actual quantities of work performed and accepted in conformance with the Contract. When the accepted quantity of work performed under a unit item varies from the original proposal quantity, payment will be at the unit contract price for all work unless the total accepted quantity of any contract item, adjusted to exclude added or deleted amounts included in change orders accepted by both parties, increases or decreases by more than 25 percent from the original proposal quantity, <u>and if the total extended bid price for that item at time of award is equal to or greater than 10 percent of the total contract price at time of award</u>. In that case, payment for Contract Work may be adjusted as described herein.

Supplement this section with the following:

The lump sum amounts for “Chemical Injection Grouting,” and ”Concrete Repair“ have been entered into the Bid Schedule only to provide a common proposal for bidders. Actual amount paid for these items will be determined by the amount of work authorized by the Project Engineer under Section 1-09.6, Force Account.

1-05 CONTROL OF WORK

1-05.7 Removal of Defective and Unauthorized Work

(October 1, 2005 APWA GSP)

Supplement this section with the following:

If the Contractor fails to remedy defective or unauthorized work within the time specified in a written notice from the Engineer, or fails to perform any part of the work required by the Contract Documents, the Engineer may correct and remedy such work as may be identified in the written notice, with Contracting Agency forces or by such other means as the Contracting Agency may deem necessary.

If the Contractor fails to comply with a written order to remedy what the Engineer determines to be an emergency situation, the Engineer may have the defective and unauthorized work corrected immediately, have the rejected work removed and replaced, or have work the Contractor refuses to perform completed by using Contracting Agency or other forces. An emergency situation is any situation when, in the opinion of the Engineer, a delay in its remedy could be potentially unsafe, or might cause serious risk of loss or damage to the public.

Direct or indirect costs incurred by the Contracting Agency attributable to correcting and remedying defective or unauthorized work, or work the Contractor failed or refused to perform, shall be paid by the Contractor. Payment will be deducted by the Engineer from monies due, or to become due, the Contractor. Such direct and indirect costs shall include in particular, but without limitation, compensation for additional professional services required, and costs for repair and replacement of work of others destroyed or damaged by correction, removal, or replacement of the Contractor’s unauthorized work.

No adjustment in contract time or compensation will be allowed because of the delay in the performance of the work attributable to the exercise of the Contracting Agency's rights provided by this Section.

The rights exercised under the provisions of this section shall not diminish the Contracting Agency's right to pursue any other avenue for additional remedy or damages with respect to the Contractor's failure to perform the work as required.

1-05.11 Final Inspection

Delete this section and replace it with the following:

1-05.11 Final Inspections and Operational Testing

(October 1, 2005 APWA GSP)

1-05.11(1) Substantial Completion Date

When the Contractor considers the work to be substantially complete, the Contractor shall so notify the Engineer and request the Engineer establish the Substantial Completion Date. The Contractor's request shall list the specific items of work that remain to be completed in order to reach physical completion. The Engineer will schedule an inspection of the work with the Contractor to determine the status of completion. The Engineer may also establish the Substantial Completion Date unilaterally.

If, after this inspection, the Engineer concurs with the Contractor that the work is substantially complete and ready for its intended use, the Engineer, by written notice to the Contractor, will set the Substantial Completion Date. If, after this inspection the Engineer does not consider the work substantially complete and ready for its intended use, the Engineer will, by written notice, so notify the Contractor giving the reasons therefore.

Upon receipt of written notice concurring in or denying substantial completion, whichever is applicable, the Contractor shall pursue vigorously, diligently and without unauthorized interruption, the work necessary to reach Substantial and Physical Completion. The Contractor shall provide the Engineer with a revised schedule indicating when the Contractor expects to reach substantial and physical completion of the work.

The above process shall be repeated until the Engineer establishes the Substantial Completion Date and the Contractor considers the work physically complete and ready for final inspection.

1-05.11(2) Final Inspection and Physical Completion Date

When the Contractor considers the work physically complete and ready for final inspection, the Contractor by written notice shall request the Engineer to schedule a final inspection. The Engineer will set a date for final inspection. The Engineer and the Contractor will then make a final inspection and the Engineer will notify the Contractor in writing of all particulars in which the final inspection reveals the work incomplete or unacceptable. The Contractor shall immediately take such corrective measures as are necessary to remedy the listed deficiencies. Corrective work shall be pursued vigorously, diligently, and without interruption until physical completion of the listed deficiencies. This process will continue until the Engineer is satisfied the listed deficiencies have been corrected.

If action to correct the listed deficiencies is not initiated within 7 days after receipt of the written notice listing the deficiencies, the Engineer may, upon written notice to the Contractor, take whatever steps are necessary to correct those deficiencies pursuant to Section 1-05.7.
The Contractor will not be allowed an extension of contract time because of a delay in the performance of the work attributable to the exercise of the Engineer's right hereunder.

Upon correction of all deficiencies, the Engineer will notify the Contractor and the Contracting Agency, in writing, of the date upon which the work was considered physically complete. That date shall constitute the Physical Completion Date of the contract, but shall not imply acceptance of the work or that all the obligations of the Contractor under the contract have been fulfilled.

1-05.11(3) Operational Testing

It is the intent of the Contracting Agency to have at the Physical Completion Date a complete and operable system. Therefore when the work involves the installation of machinery or other mechanical equipment; street lighting, electrical distribution or signal systems; irrigation systems; buildings; or other similar work it may be desirable for the Engineer to have the Contractor operate and test the work for a period of time after final inspection but prior to the physical completion date. Whenever items of work are listed in the Contract Provisions for operational testing they shall be fully tested under operating conditions for the time period specified to ensure their acceptability prior to the Physical Completion Date. During and following the test period, the Contractor shall correct any items of workmanship, materials, or equipment which prove faulty, or that are not in first class operating condition. Equipment, electrical controls, meters, or other devices and equipment to be tested during this period shall be tested under the observation of the Engineer, so that the Engineer may determine their suitability for the purpose for which they were installed. The Physical Completion Date cannot be established until testing and corrections have been completed to the satisfaction of the Engineer.

The costs for power, gas, labor, material, supplies, and everything else needed to successfully complete operational testing, shall be included in the unit contract prices related to the system being tested, unless specifically set forth otherwise in the proposal.

Operational and test periods, when required by the Engineer, shall not affect a manufacturer's guaranties or warranties furnished under the terms of the contract.

1-05.15 Method of Serving Notices

(March 25, 2009 APWA GSP)

Revise the second paragraph to read:

All correspondence from the Contractor shall be directed to the Project Engineer. <u>All correspondence from the Contractor constituting any notification, notice of protest, notice of dispute, or other correspondence constituting notification required to be furnished under the Contract, must be in paper format, hand delivered or sent via mail delivery service to the Project Engineer's office. Electronic copies such as e-mails or electronically delivered copies of correspondence will not constitute such notice and will not comply with the requirements of the Contract.</u>

Add the following new section:

1-05.16 Water and Power

(October 1, 2005 APWA GSP)

The Contractor shall make necessary arrangements, and shall bear the costs for power and water necessary for the performance of the work, unless the contract includes power and water as a pay item.

Add the following new section:

1-05.17 Oral Agreements

(October 1, 2005 AWPA GSP)

No oral agreement or conversation with any officer, agent, or employee of the Contracting Agency, either before or after execution of the contract, shall affect or modify any of the terms or obligations contained in any of the documents comprising the contract. Such oral agreement or conversation shall be considered as unofficial information and in no way binding upon the Contracting Agency, unless subsequently put in writing and signed by the Contracting Agency.

1-07 LEGAL RELATIONS AND RESPONSIBILITIES TO THE PUBLIC

1-07.1 Laws to be Observed

(October 1, 2005 APWA GSP)

Supplement this section with the following:

In cases of conflict between different safety regulations, the more stringent regulation shall apply.

The Washington State Department of Labor and Industries shall be the sole and paramount administrative agency responsible for the administration of the provisions of the Washington Industrial Safety and Health Act of 1973 (WISHA).

The Contractor shall maintain at the project site office, or other well known place at the project site, all articles necessary for providing first aid to the injured. The Contractor shall establish, publish, and make known to all employees, procedures for ensuring immediate removal to a hospital, or doctor's care, persons, including employees, who may have been injured on the project site. Employees should not be permitted to work on the project site before the Contractor has established and made known procedures for removal of injured persons to a hospital or a doctor's care.

The Contractor shall have sole responsibility for the safety, efficiency, and adequacy of the Contractor's plant, appliances, and methods, and for any damage or injury resulting from their failure, or improper maintenance, use, or operation. The Contractor shall be solely and completely responsible for the conditions of the project site, including safety for all persons and property in the performance of the work. This requirement shall apply continuously, and not be limited to normal working hours. The required or implied duty of the Engineer to conduct construction review of the Contractor's performance does not, and shall not, be intended to include review and adequacy of the Contractor's safety measures in, on, or near the project site.

(April 3, 2006)
Confined Space
Confined spaces exist at the following locations:

PS-10 Wetwell and Vault
PS-5 Wetwell and Vaults, and the bypass manhole upstream of the pump station.
PS-6 Wetwell and Vaults, and the bypass manhole upstream of the pump station

The Contractor shall be fully responsible for the safety and health of all on-site workers and compliant with Washington Administrative Code (WAC 296-809).

The Contractor shall prepare and implement a confined space program for each of the confined spaces identified above. The Contractors Confined Space program shall be sent to the contracting agency at least 30 days prior to the Contractor beginning work in or adjacent to the confined space. No work shall be performed in or adjacent to the confined space until the plan is submitted to the Engineer as required. The Contractor shall communicate with the Project Engineer to ensure a coordinated effort for providing and maintaining a safe worksite for both the Contracting Agency's and Contractor's workers when working in or near a confined space.
All costs to prepare and implement the confined space program shall be included in the bid prices for the various items associated with the confined space work.

1-07.2 State Taxes

Delete this section, including its sub-sections, in its entirety and replace it with the following:

1-07.2 State Sales Tax

(June 27, 2011 APWA GSP)

The Washington State Department of Revenue has issued special rules on the State sales tax. Sections 1-07.2(1) through 1-07.2(3) are meant to clarify those rules. The Contractor should contact the Washington State Department of Revenue for answers to questions in this area. The Contracting Agency will not adjust its payment if the Contractor bases a bid on a misunderstood tax liability.

The Contractor shall include all Contractor-paid taxes in the unit bid prices or other contract amounts. In some cases, however, state retail sales tax will not be included. Section 1-07.2(2) describes this exception.

The Contracting Agency will pay the retained percentage (or release the Contract Bond if a FHWA-funded Project) only if the Contractor has obtained from the Washington State Department of Revenue a certificate showing that all contract-related taxes have been paid (RCW 60.28.051). The Contracting Agency may deduct from its payments to the Contractor any amount the Contractor may owe the Washington State Department of Revenue, whether the amount owed relates to this contract or not. Any amount so deducted will be paid into the proper State fund.

1-07.2(1) State Sales Tax — Rule 171

WAC 458-20-171, and its related rules, apply to building, repairing, or improving streets, roads, etc., which are owned by a municipal corporation, or political subdivision of the state, or by the United

States, and which are used primarily for foot or vehicular traffic. This includes storm or combined sewer systems within and included as a part of the street or road drainage system and power lines when such are part of the roadway lighting system. For work performed in such cases, the Contractor shall include Washington State Retail Sales Taxes in the various unit bid item prices, or other contract amounts, including those that the Contractor pays on the purchase of the materials, equipment, or supplies used or consumed in doing the work.

1-07.2(2) State Sales Tax — Rule 170

WAC 458-20-170, and its related rules, apply to the constructing and repairing of new or existing buildings, or other structures, upon real property. This includes, but is not limited to, the construction of streets, roads, highways, etc., owned by the state of Washington; water mains and their appurtenances; sanitary sewers and sewage disposal systems unless such sewers and disposal systems are within, and a part of, a street or road drainage system; telephone, telegraph, electrical power distribution lines, or other conduits or lines in or above streets or roads, unless such power lines become a part of a street or road lighting system; and installing or attaching of any article of tangible personal property in or to real property, whether or not such personal property becomes a part of the realty by virtue of installation.

For work performed in such cases, the Contractor shall collect from the Contracting Agency, retail sales tax on the full contract price. The Contracting Agency will automatically add this sales tax to each payment to the Contractor. For this reason, the Contractor shall not include the retail sales tax in the unit bid item prices, or in any other contract amount subject to Rule 170, with the following exception.

Exception: The Contracting Agency will not add in sales tax for a payment the Contractor or a subcontractor makes on the purchase or rental of tools, machinery, equipment, or consumable supplies not integrated into the project. Such sales taxes shall be included in the unit bid item prices or in any other contract amount.

1-07.2(3) Services

The Contractor shall not collect retail sales tax from the Contracting Agency on any contract wholly for professional or other services (as defined in Washington State Department of Revenue Rules 138 and 244).

1-07.6 Permits and Licenses

(******)

Supplement this section with the following:

Contractor shall be responsible for obtaining all permits and licenses required to complete the Work.

The Contractor shall procure, at no cost to the City, a Business License from the City of Fife. The License can be obtained at the City Clerk's Office, and a copy of the License shall be submitted with the executed Contract documents.

1-07.7 Load Limits

Section 1-07.7 is supplemented with the following:
(March 13, 1995)

Except for the load limit restrictions specified in Section 1-07.7(2), the Contractor may operate vehicles which exceed the legal gross weight limitations without special permits or payment of additional fees provided such vehicles are employed in the construction and within the limits of this project.

Subparagraph 1 of the second paragraph of Section 1-07.7(1) is deleted.

If the sources of materials provided by the Contractor necessitates hauling over roads other than State Highways, the Contractor shall, at the Contractor's expense, make all arrangements for the use of the haul routes.

(******)

1-07.17 Utilities and Similar Facilities

Section 1-07.17 is supplemented with the following:

Contractor shall maintain operational service to all public utilities in as continuous a manner as possible. Where services (including side sewers) are to be shut down, Contractor shall notify affected parties in writing a minimum of 3 working days in advance of the time and period of shutdown. Contractor shall make every effort to schedule shutdowns to periods of anticipated minimum usage. No utility will be allowed to be shut down for more than 6 hours per day.

Locations and dimensions shown in the Plans for existing facilities are in accordance with available information obtained without uncovering, measuring, or other verification.

The following addresses and telephone numbers of utility companies known or suspected of having facilities within the project limits are supplied for the Contractor's convenience:

City of Fife – water, sewer and storm drainage
Public Works Department
3725 Pacific Highway East
Fife, WA 98424
Attn: Ken Gill, P.E.
(253) 922-9315

CenturyLink
2510 84th Street, Suite 18
Lakewood, WA 98499
Attn: Darius Sparks
(253) 597-7772

Tacoma Public Utilities (Tacoma Power/Click!)
3628 South 35th Street
Tacoma, WA 98409-3192
Attn: Dan Reed
(253) 502-8292

Puget Sound Energy - Power
3130 S 38th Street
Tacoma, WA 98409
Attn: Jeff Zitterich
(360) 239-0243

Puget Sound Energy - Gas
3130 S 38th Street
Tacoma, WA 98409
Attn: Suzanne Anders
(253) 476-6037

Comcast
410 Valley Ave. NW, Suite 12-Bldg C
Puyallup, WA 98371
Attn: Aaron Cantrel
(206) 510-4222

The Contractor shall give forty-eight (48) hours notice to all utility companies/agencies involved where work is to take place and in all other respects comply with the provisions of Chapter 19.122 RCW. Notice shall include, but not be limited to, the utility companies/agencies serving the area.

If any damage is done to an existing utility, the Contractor shall notify an authority of the particular utility company involved. That utility will dispatch a crew to repair the damages at the Contractor's expense, or authorize the Contractor to repair the damage at his (the Contractor's) expense. The Contractor shall repair all damaged City-owned utilities in accordance with the Contract Documents. The Contractor shall immediately notify the City of Fife Construction Inspector when any damage occurs to any existing utility.

The Contractor is responsible for coordinating with all the utility owners regarding notification and relocation schedule so as not to impact the Contractor's schedule. There will be no additional working days awarded the Contractor for delays caused by utility relocation work. All costs associated with coordination with utility owners, and any accompanying delay in the Contractor's work to allow for relocation, shall be incidental to the contract.

All costs associated with coordinating with the utilities to schedule their wiring installations shall be incidental to the contract. The Contractor shall be responsible for ensuring that his work is complete sufficiently early to allow the utilities to complete their work. Any delays or additional costs incurred by the Contractor due to delayed installations by the utilities will be borne by the Contractor. No additional payment or additional working days will be awarded to the Contractor. The City of Fife will assist the Contractor to the extent possible to ensure that the utilities cooperate with the Contractor in coordinating work.

1-07.18 Public Liability and Property Damage Insurance

Delete this section in its entirety, and replace it with the following:

1-07.18 Insurance

(January 24, 2011 APWA GSP)

1-07.18(1) General Requirements

A. The Contractor shall obtain the insurance described in this section from insurers approved by the State Insurance Commissioner pursuant to RCW Title 48. The insurance must be provided by an insurer with a rating of A-: VII or higher in the A.M. Best's Key Rating Guide, which is licensed to do business in the state of Washington (or issued as a surplus line by a Washington Surplus lines broker). The Contracting Agency reserves the right to approve or reject the insurance provided, based on the insurer (including financial condition), terms and coverage, the Certificate of Insurance, and/or endorsements.

B. The Contractor shall keep this insurance in force during the term of the Contract and for thirty (30) days after the Physical Completion date, unless otherwise indicated (see C. below).

C. If any insurance policy is written on a claims made form, its retroactive date, and that of all subsequent renewals, shall be no later than the effective date of this Contract. The policy shall state that coverage is claims made, and state the retroactive date. Claims-made form coverage shall be maintained by the Contractor for a minimum of 36 months following the Final Completion or earlier termination of this Contract, and the Contractor shall annually provide the Contracting Agency with proof of renewal. If renewal of the claims made form of coverage becomes unavailable, or economically prohibitive, the Contractor shall purchase an extended reporting period ("tail") or execute another form of guarantee acceptable to the Contracting Agency to assure financial responsibility for liability for services performed.

D. The insurance policies shall contain a "cross liability" provision.

E. The Contractor's and all subcontractors' insurance coverage shall be primary and non-contributory insurance as respects the Contracting Agency's insurance, self-insurance, or insurance pool coverage.

F. The Contractor shall provide the Contracting Agency and all Additional Insureds with written notice of any policy cancellation, within two business days of their receipt of such notice.

G. Upon request, the Contractor shall forward to the Contracting Agency a full and certified copy of the insurance policy(s).

H. The Contractor shall not begin work under the Contract until the required insurance has been obtained and approved by the Contracting Agency.

I. Failure on the part of the Contractor to maintain the insurance as required shall constitute a material breach of contract, upon which the Contracting Agency may, after giving five business days notice to the Contractor to correct the breach, immediately terminate the Contract or, at its discretion, procure or renew such insurance and pay any and all premiums in connection therewith, with any sums so expended to be repaid to the Contracting Agency on demand, or at

the sole discretion of the Contracting Agency, offset against funds due the Contractor from the Contracting Agency.

J. All costs for insurance shall be incidental to and included in the unit or lump sum prices of the contract and no additional payment will be made.

1-07.18(2) Additional Insured

All insurance policies, with the exception of Professional Liability and Workers Compensation, shall name the following listed entities as additional insured(s):

- the Contracting Agency and its officers, elected officials, employees, agents, and volunteers
- Tetra Tech

The above-listed entities shall be additional insured(s) for the full available limits of liability maintained by the Contractor, whether primary, excess, contingent or otherwise, irrespective of whether such limits maintained by the Contractor are greater than those required by this Contract, and irrespective of whether the Certificate of Insurance provided by the Contractor pursuant to 1-07.18(3) describes limits lower than those maintained by the Contractor.

1-07.18(3) Subcontractors

Contractor shall ensure that each subcontractor of every tier obtains and maintains at a minimum the insurance coverages listed in 1-07.18(5)A and 1-07.18(5)B. Upon request of the Contracting Agency, the Contractor shall provide evidence of such insurance.

1-07.18(4) Evidence of Insurance

The Contractor shall deliver to the Contracting Agency a Certificate(s) of Insurance and endorsements for each policy of insurance meeting the requirements set forth herein when the Contractor delivers the signed Contract for the work. The certificate and endorsements must conform to the following requirements:

1. An ACORD certificate or a form determined by the Contracting Agency to be equivalent.

2. Copies of all endorsements naming Contracting Agency and all other entities listed in 1-07.18(2) as Additional Insured(s), showing the policy number. The Contractor may submit a copy of any blanket additional insured clause from its policies instead of a separate endorsement. A statement of additional insured status on an ACORD Certificate of Insurance shall <u>not</u> satisfy this requirement.
3. Any other amendatory endorsements to show the coverage required herein.

1-07.18(5) Coverages and Limits

The insurance shall provide the minimum coverages and limits set forth below. Providing coverage in these stated minimum limits shall not be construed to relieve the Contractor from liability in excess of such limits. All deductibles and self-insured retentions must be disclosed and are subject to approval by the Contracting Agency. The cost of any claim payments falling within the deductible shall be the responsibility of the Contractor.

1-07.18(5)A Commercial General Liability

A policy of Commercial General Liability Insurance, including:

Per project aggregate

Premises/Operations Liability

Products/Completed Operations – for a period of one year following final acceptance of the work.

Personal/Advertising Injury

Contractual Liability

Independent Contractors Liability

Stop Gap / Employers' Liability

Explosion, Collapse, or Underground Property Damage (XCU)

Blasting (only required when the Contractor's work under this Contract includes exposures to which this specified coverage responds)

Such policy must provide the following minimum limits:

$1,000,000	Each Occurrence
$2,000,000	General Aggregate
$1,000,000	Products & Completed Operations Aggregate
$1,000,000	Personal & Advertising Injury, each offence

Stop Gap / Employers' Liability

$1,000,000	Each Accident
$1,000,000	Disease - Policy Limit
$1,000,000	Disease - Each Employee

1-07.18(5)B Automobile Liability

Automobile Liability for owned, non-owned, hired, and leased vehicles, with an MCS 90 endorsement and a CA 9948 endorsement attached if "pollutants" are to be transported. Such policy(ies) must provide the following minimum limit:

$1,000,000 combined single limit

1-07.18(5)C Workers' Compensation

The Contractor shall comply with Workers' Compensation coverage as required by the Industrial Insurance laws of the state of Washington.

1-07.23 Public Convenience and Safety

1-07.23(1) Construction Under Traffic

(******)

The second paragraph of this section is to be revised as follows:

The Contractor shall maintain existing roads, streets, sidewalks, and paths within the project limits, keeping them open, and in good, clean, safe condition at all times. Deficiencies caused by the Contractor's operations shall be repaired at the Contractor's expense. Deficiencies not caused by the Contractor's operations shall be repaired by the Contractor when directed by the Engineer, at the Contracting Agency's expense. The Contractor shall also maintain roads, streets, sidewalks, and paths adjacent to the project limits when affected by the Contractor's operations. Snow and ice control will be performed by the Contracting Agency on all projects. Cleanup of snow and ice control debris will be at the Contracting Agency's expense. The Contractor shall remove or repair any condition resulting from the work that might impede traffic or create a hazard.

All costs for work described in this section 1-07.23 will not be measured for separate payment, but shall be included in the lump sum price for "Project Temporary Traffic Control".

1-07.24 Rights of Way

(October 1, 2005 APWA GSP)

Delete this section in its entirety, and replace it with the following:

Street right of way lines, limits of easements, and limits of construction permits are indicated in the Plans. The Contractor's construction activities shall be confined within these limits, unless arrangements for use of private property are made.

Generally, the Contracting Agency will have obtained, prior to bid opening, all rights of way and easements, both permanent and temporary, necessary for carrying out the work. Exceptions to this are noted in the Bid Documents or will be brought to the Contractor's attention by a duly issued Addendum.

The Contractor shall be responsible for providing, without expense or liability to the Contracting Agency, any additional land and access thereto that the Contractor may desire for temporary construction facilities, storage of materials, or other Contractor needs. However, before using any private property, whether adjoining the work or not, the Contractor shall file with the Engineer a written permission of the private property owner, and, upon vacating the premises, a written release from the property owner of each property disturbed or otherwise interfered with by reasons of construction pursued under this contract. The statement shall be signed by the private property owner, or proper authority acting for the owner of the private property affected, stating that permission has been granted to use the property and all necessary permits have been obtained or, in the case of a release, that the restoration of the property has been satisfactorily accomplished. The statement shall include the parcel number, address, and date of signature. Written releases must be filed with the Engineer before the Completion Date will be established.

1-08 PROSECUTION AND PROGRESS

Add the following new sections:

1-08.0 Preliminary Matters

(May 25, 2006 APWA GSP)

1-08.0(1) Preconstruction Conference

(October 10, 2008 APWA GSP)

Prior to the Contractor beginning the work, a preconstruction conference will be held between the Contractor, the Engineer and such other interested parties as may be invited. The purpose of the preconstruction conference will be:

1. To review the initial progress schedule;
2. To establish a working understanding among the various parties associated or affected by the work;
3. To establish and review procedures for progress payment, notifications, approvals, submittals, etc;
4. To establish normal working hours for the work;
5. To review safety standards and traffic control; and
6. To discuss such other related items as may be pertinent to the work.

The Contractor shall prepare and submit at the preconstruction conference the following:

1. A breakdown of all lump sum items;
2. A preliminary schedule of working drawing submittals; and
3. A list of material sources for approval if applicable.

1-08.0(2) Hours of Work

(June 27, 2011 APWA GSP)

Except in the case of emergency or unless otherwise approved by the Contracting Agency, the normal straight time working hours for the Contract shall be any consecutive 8-hour period between 7:00 a.m. and 6:00 p.m. of a working day with a maximum 1-hour lunch break and a 5-day work week. The normal straight time 8-hour working period for the Contract shall be established at the preconstruction conference or prior to the Contractor commencing the work.

Written permission from the Engineer is required, if a Contractor desires to perform work on holidays, Saturdays, or Sundays; before 7:00 a.m. or after 6:00 p.m. on any day; or longer than an 8-hour period on any day. The Contractor shall apply in writing to the Engineer for such permission, no later than noon on the working day prior to the day for which the Contractor is requesting permission to work.

Permission to work between the hours of 10:00 p.m. and 7:00 a.m. during weekdays and between the hours of 10:00 p.m. and 9:00 a.m. on weekends or holidays may also be subject to noise control requirements. Approval to continue work during these hours may be revoked at any time the Contractor exceeds the Contracting Agency's noise control regulations or complaints are received

from the public or adjoining property owners regarding the noise from the Contractor's operations. The Contractor shall have no claim for damages or delays should such permission be revoked for these reasons.

Permission to work Saturdays, Sundays, holidays, or other than the agreed upon normal straight time working hours Monday through Friday may be given subject to certain other conditions set forth by the Contracting Agency or Engineer. These conditions may include but are not limited to:

- The Engineer may require designated representatives to be present during the work. Representatives who may be deemed necessary by the Engineer include, but are not limited to: survey crews; personnel from the Contracting Agency's material testing lab; inspectors; and other Contracting Agency employees when in the opinion of the Engineer, such work necessitates their presence.
- On non-Federal aid projects, requiring the Contractor to reimburse the Contracting Agency for the costs in excess of straight-time costs for Contracting Agency representatives who worked during such times.
- Considering the work performed on Saturdays, Sundays, and holidays as working days with regard to the contract time.
- Considering multiple work shifts as multiple working days with respect to contract time, even though the multiple shifts occur in a single 24-hour period.

1-08.0(3) Reimbursement for Overtime Work of Contracting Agency Employees

(May 25, 2006 APWA GSP; may not be used on FHWA-funded projects)

Where the Contractor elects to work on a Saturday, Sunday, or holiday, or longer than an 8-hour work shift on a regular working day, as defined in the Standard Specifications, such work shall be considered as overtime work. On all such overtime work an inspector will be present, and a survey crew may be required at the discretion of the Engineer. In such case, the Contracting Agency may deduct from amounts due or to become due to the Contractor for the costs in excess of the straight-time costs for employees of the Contracting Agency required to work overtime hours.

The Contractor by these specifications does hereby authorize the Engineer to deduct such costs from the amount due or to become due to the Contractor.

(******)

1-08.3(2) Progress Schedule Types

Replace the first sentence with the following:

A Type A Progress Schedule is required on this project

(******)

1-08.3(2)D Weekly Look-Ahead Schedule

Replace this paragraph with the following:

The Contractor shall submit a Weekly Look-Ahead Schedule at each construction progress meeting showing the Contractor's and all Subcontractor's proposed work activities for the next two week period. The Weekly Look-Ahead Schedule shall include the description, duration, and sequence of

work. The schedule may be a network schedule, bar chart, or a typewritten list of date/activities. The schedule shall clearly indicate the location (PS-10, PS-5, or PS-6) where the work is planned.

1-08.4 Prosecution of Work

Delete this section in its entirety, and replace it with the following:

1-08.4 Notice to Proceed and Prosecution of Work

(June 27, 2011 APWA GSP)

Notice to Proceed will be given after the Contract has been executed and the contract bond and evidence of insurance have been approved and filed by the Contracting Agency. The Contractor shall not commence with the work until the Notice to Proceed has been given by the Engineer. The Contractor shall commence construction activities on the project site within ten days of the Notice to Proceed Date, unless otherwise approved in writing. The Contractor shall diligently pursue the work to the physical completion date within the time specified in the Contract. Voluntary shutdown or slowing of operations by the Contractor shall not relieve the Contractor of the responsibility to complete the work within the time(s) specified in the Contract.

When shown in the Plans, the first order of work shall be the installation of high visibility fencing to delineate all areas for protection or restoration, as described in the Contract. Installation of high visibility fencing adjacent to the roadway shall occur after the placement of all necessary signs and traffic control devices in accordance with 1-10.1(2). Upon construction of the fencing, the Contractor shall request the Engineer to inspect the fence. No other work shall be performed on the site until the Contracting Agency has accepted the installation of high visibility fencing, as described in the Contract.

1-08.5 Time for Completion

Section 1-08.5 is supplemented with the following:
(March 13, 1995)

This project shall be physically complete within 260 working days.

(June 28, 2007 APWA GSP, Option A)

Revise the third and fourth paragraphs to read:

Contract time shall begin on the first working day following <u>the Notice to Proceed Date</u>.

Each working day shall be charged to the contract as it occurs, until the contract work is physically complete. If substantial completion has been granted and all the authorized working days have been used, charging of working days will cease. Each week the Engineer will provide the Contractor a statement that shows the number of working days: (1) charged to the contract the week before; (2) specified for the physical completion of the contract; and (3) remaining for the physical completion of the contract. The statement will also show the nonworking days and any partial or whole day the Engineer declares as unworkable. Within 10 calendar days after the date of each statement, the Contractor shall file a written protest of any alleged discrepancies in it. To be considered by the Engineer, the protest shall be in sufficient detail to enable the Engineer to ascertain the basis and amount of time disputed. By not filing such detailed protest in that period,

the Contractor shall be deemed as having accepted the statement as correct. If the Contractor elects to work 10 hours a day and 4 days a week (a 4-10 schedule) and the fifth day of the week in which a 4-10 shift is worked would ordinarily be charged as a working day then the fifth day of that week will be charged as a working day whether or not the Contractor works on that day.

1-09 MEASUREMENT AND PAYMENT

1-09.6 Force Account

(October 10. 2008 APWA GSP)

Supplement this section with the following:

The Contracting Agency has estimated and included in the Proposal, dollar amounts for all items to be paid per force account, only to provide a common proposal for Bidders. All such dollar amounts are to become a part of Contractor's total bid. However, the Contracting Agency does not warrant expressly or by implication that the actual amount of work will correspond with those estimates. Payment will be made on the basis of the amount of work actually authorized by the Engineer.

(******)
Supplement this section with the following:

The Contracting Agency requires that certain types of force account work for this project be completed under Contract Specification 01020, Force Account Procedures for Coating Work. This specification completely replaces Section 1-09.6 of the Standard Specification for the following work (Referred to as Force Account for Coating Work):

1. Chemical Injection Grouting (Specification 02658)
2. Concrete Repair (Specification 03700)

Refer to Specification 01020 for further details of the procedures to be followed in completing the Force Account for Coating Work indicated above.

All other Force Account work is to be completed per Section 1-09.6. The Contracting Agency has coordinated with various utilities to identify buried pipelines and conduits in the project areas where excavation is required. The Contract Drawings show the approximate location of the buried utilities, however the Contractor is responsible for conducting his own investigation, and protect existing buried utilities while executing the work as shown in the Contract Drawings. No utility relocation is anticipated to be required at PS-5 and PS-6 for the installation of the temporary sewage bypass piping, or for the installation of the blower pad and air piping for the wetwell aeration/mixing system, however the Contracting Agency recognizes the possibility that additional work beyond what is shown in the Contract Documents may be necessary, such as to avoid and/or protect existing utilities during the execution of the work. The Contracting Agency intends to pay for additional work such as this under the Force Account bid item for PS-5 or PS-6 as applicable.

Some of the existing utilities at the PS-10 site are indicated to be relocated (Tacoma Power Conduit), demolished (the existing power service to the pump station, the existing 2-inch water service, etc.), or removed and replaced (the street lighting conduit, the irrigation line, etc.). Some of the existing conduit (Century Link telephone and fiber optic conduit) is shown to remain in its current location, as it appears that it may be possible to construct the new facilities at the PS-10 site without having to relocate this Century Link conduit. As discussed in the previous paragraph, the Contracting Agency intends to fund work to protect, or if necessary, relocate buried utilities to allow

the construction of the new facilities shown in the Contract Documents. The Century Link Conduit is at an unknown depth, however it is at least 4 ft. below existing grade, as it was not exposed during a vactor excavation of approximately 4 ft deep across the site (See the PS-10 Rehabilitation Photos in Appendix C).

The Contract Documents assume that the Century Link conduit at PS-10 will not be relocated, or removed and replaced, although this conduit is in the immediate vicinity of the new facilities. For example, the Century Link conduit immediately north of the new valve vault may be able to be moved horizontally due to the flexibility of the conduit to allow the vault to be constructed as shown in the Contract Documents. Another example is the fiber optic conduit that traverses the northern boundary of the PS-10 site. It appears that this conduit may be deep enough to allow the construction of the new facilities (the barrier curb, the concrete slab for the weather cover, etc.) over the fiber optic conduit. The Contracting Agency recognizes that the Contractor may perform additional work in protecting/avoiding/and working around this conduit in the course of constructing the new facilities. This additional work would be paid under the Force Account bid item for PS-10. If the level of interference with the new construction indicates that some, or all, of the Century Link conduit should be relocated, then this activity would also be funded under the Force Account bid item for PS-10.

1-09.8 Payment For Material On Hand

(August 3, 2009)

The last paragraph of Section 1-09.8 is revised to read:

The Contracting Agency will not pay for any individual item on hand with a cost of less than $2,000. As materials are used in the work, credits equaling the partial payments for them will be taken on future estimates. Each month, no later than the estimate due date, the Contractor shall submit a letter to the Project Engineer that clearly states: 1) the amount originally paid on the invoice (or other record of production cost) for the items on hand, 2) the dollar amount of the material incorporated into each of the various work items for the month, and 3) the amount that should be retained in material on hand items. If work is performed on the items and the Contractor does not submit a letter, all of the previous material on hand payment will be deducted on the estimate. Partial payment for materials on hand shall not constitute acceptance. Any material will be rejected if found to be faulty even if partial payment for it has been made.

1-09.9 Payments

(March 13, 2012 APWA GSP)

Delete the first four paragraphs and replace them with the following:

The basis of payment will be the actual quantities of Work performed according to the Contract and as specified for payment.

The Contractor shall submit a breakdown of the cost of lump sum bid items at the Preconstruction Conference, to enable the Project Engineer to determine the Work performed on a monthly basis. Absent a lump sum breakdown, the Project Engineer will make a determination based on information available. The Project Engineer's determination of the cost of work shall be final.

Progress payments for completed work and material on hand will be based upon progress estimates prepared by the Engineer. A progress estimate cutoff date will be established at the preconstruction conference.

The initial progress estimate will be made not later than 30 days after the Contractor commences the work, and successive progress estimates will be made every month thereafter until the Completion Date. Progress estimates made during progress of the work are tentative, and made only for the purpose of determining progress payments. The progress estimates are subject to change at any time prior to the calculation of the final payment.

The value of the progress estimate will be the sum of the following:

1. Unit Price Items in the Bid Form — the approximate quantity of acceptable units of work completed multiplied by the unit price.
2. Lump Sum Items in the Bid Form — based on the approved Contractor's lump sum breakdown for that item, or absent such a breakdown, based on the Engineer's determination.
3. Materials on Hand — 100 percent of invoiced cost of material delivered to Job site or other storage area approved by the Engineer.
4. Change Orders — entitlement for approved extra cost or completed extra work as determined by the Engineer.

Progress payments will be made in accordance with the progress estimate less:

1. Retainage per Section 1-09.9(1), on non FHWA-funded projects;
2. The amount of progress payments previously made; and
3. Funds withheld by the Contracting Agency for disbursement in accordance with the Contract Documents.

Progress payments for work performed shall not be evidence of acceptable performance or an admission by the Contracting Agency that any work has been satisfactorily completed. The determination of payments under the contract will be final in accordance with Section 1-05.1.

1-10 TEMPORARY TRAFFIC CONTROL

1-10.2 Traffic Control Management

1-10.2(1) General

(December 1, 2008)
Supplement this section with the following:

Only training with WSDOT TCS card and WSDOT training curriculum is recognized in the State of Washington. The Traffic Control Supervisor shall be certified by one of the following:

The Northwest Laborers-Employers Training Trust
27055 Ohio Ave.
Kingston, WA 98346
(360) 297-3035

Evergreen Safety Council
401 Pontius Ave. N.
Seattle, WA 98109
1-800-521-0778 or
(206) 382-4090

The American Traffic Safety Services Association
15 Riverside Parkway, Suite 100
Fredericksburg, Virginia 22406-1022
Training Dept. Toll Free (877) 642-4637
Phone: (540) 368-1701

1-10.2(2) Traffic Control Plans

(******)
Supplement this section with the following:

The Contractor shall prepare site specific Traffic Control Plans for all phases of the work and submit them for approval to the Engineer. The Contractor's proposed Traffic Control Plans shall show the necessary lane closures, lane shifts, construction signs, flaggers, spotters, and other traffic control devices required to support each phase of the construction. A separate plan shall be prepared for each major construction phase. The Contractor-provided plans shall be prepared by the Contractor's Traffic Control Supervisor or a licensed engineer in the State of Washington and shall conform to the requirements contained in the latest version of the Manual on Uniform Traffic Control Devices (MUTCD) and the latest version of the Work Zone Traffic Control Guidelines published by the Washington State Department of Transportation.

Developing an approved Traffic Control Plan shall be considered incidental to the lump sum price in the Proposal for "Temporary Traffic Control" and no additional compensation will be made. Any costs associated with necessary revisions as a result of comments from the Engineer shall be incidental to this item.

1-10.3 Traffic Control Labor, Procedures, and Devices

1-10.3(3) Traffic Control Devices

1-10.3(3)C Portable Changeable Message Sign

(******)
Supplement this section with the following:

The City will provide a Portable Changeable Message Sign for the Contractor's use during the project. Contractor shall be responsible for operating and maintaining the Portable Changeable Message Sign throughout construction. The Portable Changeable Message Sign shall be in be in place a minimum of five (5) calendar days prior to construction and remain through the duration of the construction.

All costs associated with operating and maintaining the Portable Changeable Message Sign for the required duration shall be included in the Proposal item, "Project Temporary Traffic Control".

1-10.5(1) Lump Sum Bid for Project (No Unit Items)

(******)

This section is supplemented with the following:

"Project Temporary Traffic Control", lump sum.

Costs for layout, installation, removal, and transport of project signage shall be included with the Contract lump sum price for "Project Temporary Traffic Control." This Bid item shall also constitute full compensation for all labor, tools, equipment, and materials necessary or incidental to providing traffic and pedestrian control and providing and maintaining detours as required throughout the project duration in compliance with the MUTCD.

Preparation and implementation of the Traffic Control Plan shall be included in the "Project Temporary Traffic Control" lump sum price.

END OF DIVISION 1

DIVISION 2: EARTHWORK

2-01 CLEARING, GRUBBING, AND ROADSIDE CLEANUP

2-01.4 Measurement and Pavement

Replace this section with the following:

No specific unit of measurement will apply to the lump sum Bid item “Clearing, Grubbing and Roadside Cleanup”.

2-01.5 Payment

Supplement this section with the following:

Payment shall be made in accordance with Section 1-04.1 for the following bid items:

The lump sum contract price for “Clearing, Grubbing and Roadside Cleanup” shall be full pay for furnishing all labor, materials, tools, equipment and incidentals necessary to clear and grub areas as shown in the Contract Drawings and as required to complete the work.

2-02 REMOVAL OF STRUCTURES AND OBSTRUCTIONS

2-02.3 Construction Requirements

Supplement this section with the following:

All material removed for the construction of the project shall be hauled off-site to a legal disposal site by the Contractor. The Contractor shall determine the requirements of his selected disposal site related to accepting the material to be deposited on the site. Testing of the material by the disposal site or refusal of the site to accept the material shall not be the basis for additional payment or for an extension of the Contract time. The cost of all such requirements shall be included in the various Bid prices in the Proposal.

2-02.3(3) Removal of Pavement, Sidewalks, Curbs, and Gutters

Supplement this section with the following:

Existing pavement shall be saw-cut before commencing removal as required for the construction and approved by the Engineer. Removal shall be accomplished by making a neat longitudinal vertical cut along the boundaries of the area to be removed. All cuts shall be continuous, and shall be made with saws specifically equipped for this purpose. No skip cutting will be allowed.

Any pavement that is damaged, and not designated for removal as shown on the Plans or preapproved by the Owner, shall be repaired or replaced entirely at the Contractor’s expense. The width and location of cuts shall be preapproved by the Engineer before cutting of pavement.

Wheel cutting or jack hammering will not be considered an acceptable means of pavement “cutting,” unless preapproved by the Engineer.

2-02.4 Measurement

Replace this section with the following:

No specific unit of measurement will apply to the lump sum Bid item “Removal of Structures and Obstructions”.

2-02.5 Payment

Supplement this section with the following:

Payment shall be made in accordance with Section 1-04.1 for the following bid items:

The lump sum contract price for “Removal of Structures and Obstructions” shall be full pay for furnishing all labor, materials, tools, equipment and incidentals necessary to remove and dispose of the existing structures, utilities, pavement, curb and gutter, and other existing items as shown in the Contract Drawings and as required to complete the work.

Saw-cutting and removal of AC paving is incidental to this work.

2-09 STRUCTURE EXCAVATION

2-09.4 Measurement

Replace this section with the following:

Gravel Backfill

Backfilling of structures is to be crushed surfacing base course (CSBC) in accordance with Standard Specification Section 9-03.9(3). The unit of measurement for crushed surfacing base course will be by the ton.

Shoring, PS-10

No specific unit of measurement will apply to the lump sum Bid item “Shoring PS-10”.

2-09.5 Payment

Replace this section with the following:

“Crushed Surfacing Base Course”, per ton

The unit Contract price for the Crushed Surfacing Base Course listed above shall be full payment for all equipment, labor and materials required for the installation of the specified material including but not limited to specified backfill materials, excavation, compaction, and disposal of all excess materials.

“Shoring PS-10,” lump sum

The lump sum contract price for “Shoring PS-10” shall be full pay for furnishing all labor, materials, tools, equipment and incidentals necessary to provide shoring between the pump station site and Industry Drive to allow the installation of the valve vault and associated piping as shown in the Contract Drawings. This includes, but is not limited to design, submittals, installation, protection of existing utilities, and complete removal after the shoring is no longer required. It also includes any other shoring necessary to complete the work at the PS-10 site, including for the water system improvements to the east and to the west of the PS-10 site.

2-11 TRIMMING AND CLEANUP

2-11.1 Description

This section is to be supplemented with the following:

During construction, and then upon completion of the work, the Contractor shall tidy up the surrounding general area to make it neat in appearance, including removal of debris that may or may not have been deposited by Contractor's operation.

Paved street surfaces, existing and new, shall be thoroughly cleaned (street sweeper) upon completion of work within the area, and shall require daily cleaning if dust or mud exists. Prior to job acceptance, all streets shall be cleaned.

2-11.3 Construction Requirements

Add the following sub-sections:

2-11.3(1) Routine Cleaning

General

1. Retain all stored materials and equipment in an orderly fashion allowing maximum access, not impeding drainage or traffic, and providing protection.
2. Do not allow the accumulation of scrap, debris, waste material, and other items not required for this work.
3. At least twice each month, and more often if necessary or as directed by the Construction Inspector, the Contractor shall completely remove all scrap, debris, and waste material from the project site.
4. Provide adequate storage for all materials awaiting removal from the project site, observing all requirements for fire protection and protection of the environment.

Site

1. Daily and more often if necessary or as directed, inspect the site and pick up all scrap, debris, and waste material. Remove all such items to the place designated for their storage until it can be disposed of.
2. Weekly, and more often if necessary or directed, inspect all arrangements of materials stored on the site, restack, tidy, or otherwise service all arrangements to meet the requirements above.
3. Maintain the site in a neat and orderly condition at all times so as to meet the approval of the Owner.

2-11.3(1) Final Cleaning

Prior to final inspection, remove from the job site, all tools, surplus materials, equipment, scrap, debris, and waste.

2-11.5 Payment

This section is to be replaced with the following:

This work is incidental to other bid items.

END OF DIVISION 2

DIVISION 5: SURFACE TREATMENTS AND PAVEMENTS

5-04 HOT MIX ASPHALT

5-04.1 Description

Supplement this Section with the following:

This work shall consist of providing and placing one or more layers of plant-mixed hot-mix asphalt (HMA) on a prepared foundation or base in accordance with these Specifications and the lines, grades, thickness, and typical cross sections shown in the Plans.

This work shall include the supply and installation of asphalt concrete pavement for the construction of roadways, driveways, and other areas as shown on the Plans.

HMA shall be composed of asphalt binder and mineral materials as may be required, mixed in the proportions specified to provide a homogeneous, stable, and workable mixture.

5-04.2 Materials

Supplement this Section with the following:

All asphalt shall be HMA Cl. ½" PG 64-22, with mix design developed for acceptance by commercial evaluation per Section 5-04.

Tack coat shall be emulsified asphalt grade CRS-1 as specified in Section 9-02.1(6), Cationic Emulsified Asphalt, of the Standard Specifications and will be used at locations specified or as directed by the Engineer.

All costs for tack coat shall be considered incidental to and included in other unit contract prices.

5-04.3 Construction Requirements

Supplement this Section with the following:

Where the new HMA pavement connects to the existing pavement, the transition shall be made with a vertical butt joint and shall produce a smooth ride. The surface of the pavement through the connection shall not vary more than 1/4 inch in 10 feet. All pavement patches are to include the planning of the patched area with an overlap of a minimum of one foot of adjacent existing AC pavement. Refer to the Contract Drawings for details of requirements for pavement patches.

If the edges of existing remaining pavement become broken, uneven, or jagged prior to placement of new asphalt abutting those edges, the existing pavement shall be re-sawcut to provide a smooth, even edge prior to placement of the new asphalt.

5-04.3(10) Compaction

5-04.3(10)B Control

Supplement this section with the following:

Asphalt shall be compacted to 91 percent of maximum density as determined by WSDOT Test Method 705. Compaction tests will be performed by a testing laboratory contracted by the Owner.

All acceptance test results will be made available to the Contractor upon request as soon as completed.

Compaction test taken on the day of paving will be based on a theoretical RICE value supplied by the Contractor prior to paving. A sample of the asphalt will be taken on the day of paving to determine the actual value. Final compaction test results will be based on the actual RICE value result from the sample taken on the day of paving. The basis of acceptance will be the revised compaction values.

5-04.3(14) Planing Bituminous Pavement

Supplement this Section with the following:

(*****)

Planing of bituminous pavement is included for all areas of AC pavement repair. Refer to the Contract Drawings for approximate boundaries of pavement patching/planning/and AC overlay. Planing of the patched area at shall overlap the existing adjacent AC pavement and be at the depth indicated in the Contract Drawings.

The Contractor shall perform the planing operations no more than seven (7) calendar days ahead of the time the planed area is to be paved with HMA, unless otherwise allowed by the Engineer in writing. Planing around structures, such as catch basins and manholes, shall be incidental to the bid item “Planing Bituminous Pavement”. No additional compensation will be provided to the Contractor for hand work around structures.

(*August 3, 2009*)
Beveled Edge Planing
A beveled edge shall be constructed in areas that will not be paved during the same work shift.

The Contractor shall use a beveled cutter on the mandrel of the planning equipment, or other approved method(s), to eliminate the vertical edge(s). The beveled edge(s) shall be constructed as a 4:1 slope.

5-04.3(17) Paving Under Traffic

Supplement this Section with the following:

Contractor shall minimize any pavement drop-offs or abrupt pavement edges to traffic during nonworking hours. Unless otherwise approved by the Engineer, pavement drop-offs or abrupt pavement edges left exposed to traffic during nonworking hours shall be protected as follows:

1. Drop-offs up to 0.20 feet, unless otherwise directed by the Engineer, may remain exposed with appropriate warning signs alerting motorists of the condition.
2. Drop-offs more than 0.20 feet that are within the traveled way shall be protected with appropriate warning signs and further protected by the following:

a. A wedge of asphalt or other material approved by the Engineer shall be placed at a slope of 4 to 1 or flatter.

b. Channelization devices shall be placed along the traffic side of the drop-off or abrupt pavement edges and shall comply with the latest edition of the MUTCD. Pavement drop-off warning signs shall be placed in advance of and throughout the drop-off area.

3. Open trenches within the traveled way shall have a steel plate cover placed over them. A wedge of asphalt or other material approved by the Engineer shall be placed along the sheet edges to provide a smooth transition between the pavement and the steel plate. Warning signs shall be used to alert motorists of the presence of the steel plates. Refer to Section 5-04.3 for additional requirements.

END OF DIVISION 5

DIVISION 7: DRAINAGE STRUCTURES, STORM SEWERS, SANITARY SEWERS, WATER MAINS, AND CONDUITS

Add the following new section:

7-00 GENERAL MATTERS

7-00.1 General

For the convenience of the Contractor the Plans show approximate locations of various existing utilities and other obstructions. This information, if shown, has been obtained from records and cannot be guaranteed accurate. The Contractor shall diligently check for interferences with existing utilities ahead of his or her work including exploration in advance of excavation.

The Contractor is further alerted to the provisions of RCW 19.122 and his or her responsibilities by performing excavation required by the Contractor Documents and Standard Specifications.

7-05 MANHOLES, INLETS, CATCH BASINS, AND DRYWELLS

7-05.2 Materials

Supplement this section with the following:

Material for backfill around structures within the roadway, as well as outside of the roadway, shall be CSBC as specified in Section 2-09, and 7-08 and as shown on the Plans.

7-08 GENERAL PIPE INSTALLATION REQUIREMENTS

7-08.1 Description

Section 7-08.1 is deleted and replaced with the following:

This work includes installing drains, culverts, storm sewers, sanitary sewers, water lines, forcemains, and air piping. The Contractor shall also follow Section 7-01, 7-02, 67-04, and 7-17 as each section applies to the specific kind of work.

7-08.2 Materials

Section 7-08.2 is supplemented with the following:

Add the following material to those listed:

Crushed Surfacing Base Course	9-03.9(3)
Crushed Surfacing Top Course	9-03.9(3)
Pea Gravel (pipe zone bedding)	9-03.12(3)

7-08.3 Construction Requirements

Section 7-08.3 is revised as follows:

7-08.3(1)C BEDDING THE PIPE

The Second paragraph is supplemented with the following:

"Pipe Zone Bedding shall be in accordance with Section 9-03.12(3) of these special provisions."

7-08.3(3) Backfilling

The second paragraph is deleted and replaced with the following:

"Trench backfill for all pipe trenches shall be crushed surfacing base course in accordance with Standard Specification Section 9-03.9(3)."

7-08.4 Measurement

Replace this section with the following:

The unit of measurement for crushed surfacing base course, crushed surfacing top course, and pea gravel will be by the ton.

7-13.5 Payment

Supplement this section with the following:

"Crushed Surfacing Base Course", per ton
"Crushed Surfacing Top Course", per ton
"Pipe Zone Bedding (pea gravel)", per ton.

The unit Contract price for the trench backfill materials listed above shall be full payment for all equipment, labor and materials required for the installation of the specified material including but not limited to specified backfill materials, excavation, compaction, and disposal of all excess materials.

Add the following new section:
(*****)

7-13 DEWATERING PS-10

7-13.1 Dewatering

The Contractor is required to install, maintain, operate, and remove a complete dewatering system designed as required to lower the ground water one foot below the PS-10 vault excavation.

Should the Contractor wish to explore the existing soil conditions they can make arrangements with the City to conduct exploratory excavation prior to bidding. The Contractor shall supply all equipment labor and materials to complete the excavation and provide temporary restoration. Permits will be issued at no cost to the Contractor.

Dewatering is required to control groundwater to maintain a dry excavation; prevent sloughing; prevent softening of the bottom of any excavation; and prevent formation of "quick" conditions, "boils", or "heave" during excavation. The Contractor shall depress water levels and hydrostatic pressures a minimum of 1 foot below the excavation bottom at all times under all conditions until all backfill has been completed for that excavation.

The Contractor shall employ sumps within the excavation to pump any pocketed or undrained water not otherwise collected or removed by the dewatering system. The use of sumps and pumps shall not be employed to lower groundwater levels more than one foot. The Contractor shall assure that

the dewatering systems operate continuously during each stage or phase of excavation and backfill. The Contractor shall ensure that the operation of any temporary dewatering system will not result in excessive drawdowns or undesirable hydraulic gradients which may affect adjacent improvements.

7-13.1(1) Submittals: Groundwater Control Plan

The Contractor shall submit a Groundwater Control Plan to the Engineer for review.
The Groundwater Control Plan shall be prepared and signed by a professional engineer licensed in the State of Washington, and include the following:

- A narrative of the Contractor's proposed dewatering system methodology.
- Dewatering schedule, including mobilization, installation, development, testing, start-up, monitoring, operation, shutdown, decommissioning, clean-up and removal.
- Working drawings showing system layout and components including number and location of dewatering wells and/or well points and discharge outfall(s).
- Pumps and sumps for removal of incidental seepage, perched groundwater, etc.
- Provision for the settlement and removal of sediments prior to discharge (settling tanks).

The Engineer's review of the Groundwater Control Plan shall not constitute approval of the methods proposed nor relieve the Contractor from full responsibility for errors or emissions therein nor from the entire responsibility for complete and adequate groundwater level control and volume removal in the excavated areas to the extent specified herein. The Contractor shall be solely responsible for control of the groundwater levels and hydrostatic pressures to the depths herein specified and for avoiding settlement outside the excavation. The Contractor shall bear sole responsibility for proper design, installation, operation, maintenance, and any failure of any component of the temporary dewatering system for the duration of the Contract.

The Contractor shall design all dewatering system components such that water table drawdown outside the immediate trench and/or excavation area does not result in settlement of existing structures, utilities, and pavement. The Contractor shall bear the sole responsibility for any and all costs associated with settlement of adjacent structures and/or improvements resulting from operation of the temporary dewatering systems.

7-13.1(2) Submittals: Field and Monitoring Data

The Contractor shall submit the following field and monitoring data, if wells are used as part of the dewatering system:

1. Drilling Logs: The drilling logs shall include the location, drilling method(s), subsurface conditions (soil and water), borehole depth, and Ecology start card number.
2. Well As-Built Diagrams: The As-Built diagrams shall include the total depth, screen slot size, screen length and depth interval, filter pack material and depth interval, and seal material and depth interval.
3. Monitoring Data: The following data shall be recorded and submitted to the Engineer on a weekly basis; number of dewatering wells or well point systems in operation, daily water levels in monitoring wells, total discharge from dewatering well and well point systems.

Monitoring wells that become inactive shall be repaired or replaced within 24 hours. Verify monitoring wells are functioning properly by adding or subtracting water to demonstrate the monitoring wells are functioning properly.

7-13.1(3) Quality Assurance

Referenced Standards: This Section incorporates by reference the latest revision of the following documents. These references are a part of this Section as specified and modified. In case of conflict between the requirements of this Section and that of the listed document, the requirements of this Section shall prevail, provided that all regulatory requirements are met.

Reference	Title
Chapter 173-160 WAC	Minimum Standards for Construction and Maintenance of Wells.
Chapter 173-162 WAC	Regulation And Licensing Of Well Contractors And Operators
Chapter 173-200 WAC	Water Quality Standards for Ground Waters of the State of Washington.
	Chapter 173-154 WAC Protection of Upper Aquifer Zones.
ASTM D 5092	Standard Practice for Design and Installation of Ground Water Monitoring Wells in Aquifers.

Dewatering Subcontractor: The Contractor shall employ the services of a specialty dewatering subcontractor who has at least five years experience in the field of dewatering system installation, operation, and maintenance, and can document successful completion of similar projects.

Settling Tank:
The Contractor shall provide a baffled settling tank or tanks of sufficient volume to ensure that discharge water is free of sediment and settleable solids. This tank shall be monitored daily to provide assurance that materials are not being pulled from wells that can later impact the stability of the area surrounding the wells. Should substantial materials (greater than 1 yard) be found in the well water, the dewatering design engineer and City shall be notified immediately. Remediation action will be determined by the Contractors engineer, and approved by the City. The costs for the agreed to remediation shall be borne by the Contractor.

7-13.2 Construction Requirements

Should wells be used, the Contractor shall meet the requirements of WAC 173-160 for all well construction, development, and decommissioning. The Contractor shall obtain variances as required to construct dewatering systems that achieve the level of groundwater drawdown specified. The Contractor shall design all dewatering system components such that formation materials (sand and silt) do not move during pumping.

Notification: The Contractor shall promptly notify the Engineer of any groundwater that the Contractor believes may be chemically contaminated and shall, under the direction of the Engineer, redirect water discharge to the City sanitary sewer (City sewer) at the location approved by the City, or cease pumping until provisions have been made for water treatment.

7-13.3(1) Operational Requirements

The Contractor shall be or shall employ the services of a specialist subcontractor who is generally recognized as experienced and knowledgeable in the field of dewatering system installation, operation, and maintenance, and shall carry general liability insurance coverage of at least $1 million. The dewatering system shall be operated at all times by workers who are competent and trained in all aspects of the system operation, maintenance, and monitoring, and who have had at least 40 hours current valid health and safety training per OSHA.

The Contractor shall control surface runoff so as to prevent entry or collection of water in excavations or in other isolated areas of the site.

1. Schedule: Dewatering shall be scheduled around the planned excavation schedule. Dewatering systems shall be installed in advance of the planned excavation to allow sufficient time to establish the required drawdown in each area of construction, and then run continuously and shall not be shut down between shifts, at night, or on holidays, weekends, or work stoppages of any kind without written permission from the Engineer. Dewatering systems or sumps shall be operated continuously for as long as they are needed in a given area.
2. Operational Monitoring: The Contractor shall provide continuous 24-hour operational monitoring of the dewatering system, by experienced personnel present on site or available on call. The Contractor shall bear full responsibility for all damages to work in the excavation area and for damages to any other area or structures caused by the Contractor's failure to maintain and operate the system properly. The Contractor shall provide adequate backup power, pumps, and equipment so that dewatering can be maintained in the event of a power or equipment failure. Additionally, the pumping rate shall be set low enough in each well to prevent excessive drawdown.
3. System Installation, Development, and Testing: The Contractor shall bear full responsibility for acquiring a water supply with which to install any dewatering system components necessary to achieve proper completion of all work performed under this Contract (i.e., drilling and jetting). Mud-rotary drilling is not permitted as a method for well installation. No additives other than clean water shall be allowed during well drilling. The Contractor shall remove fines and drilling debris from newly installed dewatering wells and monitoring wells to enhance the hydraulic connection between the screened interval and the surrounding formation. Wells shall be developed to reduce sand content and turbidity by appropriate means that do not cause formation or well damage. Initial well development water shall be stored and allowed to settle before discharge. If there is suspected groundwater contamination in the vicinity, the development water should be segregated from other development water and the Engineer should be notified. No areas of potential contamination have been identified within the Project limits.
4. Dewatering System Protection: The Contractor shall bear full responsibility for taking all reasonable precautions necessary to ensure continuous, successful operation of the temporary dewatering systems. This includes establishing and/or maintaining adequate marking of all well, pump and pipeline locations and protecting power cables against damage or theft.
5. Formation Protection: The Contractor shall design, construct, operate and maintain any dewatering system such that foundation soils, natural or engineered, will not experience fines removal upon pumping. The Contractor shall develop dewatering wells and/or well

points until the sand/silt content of the discharge water is less than 10 parts per million (ppm) as determined by a centrifugal separating meter such as a Rossum SAND TESTER (Journal AWWA, 46:123, February 1954), or equivalent. The Contractor shall provide all of the equipment and fittings for monitoring sand content and properly mount them upstream of any settling points. The Contractor shall take sand content measurements on a daily basis for the 1st five working days after well installation, and weekly thereafter in the presence of the Engineer and submit written test reports within 24 hours to the City and the Contractors Engineer.

6. System Removal: Upon written authorization of the Engineer the Contractor shall decommission and remove all dewatering system elements. The Contractor shall assume ownership and responsibility for the disposal of all dewatering pumps, pipes and other assorted system hardware. The Contractor shall employ the services of a licensed water well driller per WAC 173-162 for well decommissioning and removal, which will be accomplished in accordance with WAC 173-160.

7-13.3(2) Dewatering Discharge

All water removed by the dewatering system (unless contaminated) will be discharged to appropriate discharge points. Pre-approved discharge points will be the City storm drain system or road side ditches. Discharges with storm drains that flow to a surface water outfall must conform to all requirements of the National Pollution Discharge Elimination System (NPDES) and State Waste Discharge General Permit for stormwater discharges associated with Construction Activities. Water shall be discharged at one or more designated points, at rates not to exceed the flow capacity of the storm drain system.

7-13.4 Measurement

No specific unit of measurement will apply to the lump sum Bid item “Dewatering PS-10”.

7-13.5 Payment

Payment shall be made in accordance with Section 1-04.1 for the following bid items:

“Dewatering PS-10”, lump sum.

The lump sum contract price for “Dewatering PS-10” shall be full pay for furnishing all labor, materials, tools, equipment and incidentals necessary to provide a complete dewatering system as specified, including but not limited to design, submittals, sampling, reporting, installation, operation, sediment tank, restoration of all disturbance caused by the dewater system, complete removal, backup and spare dewatering system components, handling, testing, storage, permitting, and disposal of groundwater and sediment.

Add the following new section:
(*****)

7-16 WATER SYSTEM IMPROVEMENTS

7-16.1 Description

The Contractor is required to construct water system improvements to the west and east of the pump station site to install shut-off valves on the 12-inch water main, as well as improve existing water services at both locations. See the Civil Contract Drawings for details of the water system improvements, including facilities that are to be protected during the work, including existing utilities.

All water system work is to comply with Division 7 of the 2014 Standard Specifications, as well as the latest edition of the City of Fife Standard Details for Water Meter and Water Main Construction, which take precedence in case of differences between the two standards.

Contact for Water System Work:
Mr. Art Gregg, (253) 896-8202
City of Fife Public Works Department
3725 Pacific Hwy East,
Fife, WA 98424

7-16.2 Materials

Material requirements are specified on the Contract Civil Drawings, and the City of Fife Standard Details for Water Meter and Water Main Construction (See Appendix J). Some of the more basic material requirements are listed below:

1. Service lines (2” and smaller) are to be polyethylene pipe, iron pipe size complying with SIDR 7 and rated for 200 psi working pressure.
2. Ductile iron pipe shall conform to AWWA C151, thickness class 50, cement mortar lined, mechanical joints AWWA C111.
3. Polyethylene encasement 8 mil thickness in accordance with AWWAC105.
4. Pipe bedding is to be pea gravel per Sections 7-08.3(1)C and 9-03.12(3) of these Special Provisions.
5. Trench back fill is to be crushed surface base course (CSBC) per Sections 7-08.3(3) and 9-03.9(3) of these Special Provisions.

7-16.3 Construction Requirements

Construction requirements are shown in the Civil Contract Drawings. The following City of Fife Standard Details for Water Meter and Water Main Construction are referenced on these Drawings and are included in Appendix J:

Standard No.	Title
W-3	1-1/2” and 2” Positive Displacement Water Service Connection
W-6	Water Valves
W-7	Polyethylene Encasement Installation Instructions
W-17	Sampling Station
W-18	RPBA Assembly 2” and Smaller

The new water system components are to be pressurized to 90 psi (the water system pressure in the Industry Drive area) and visually checked for leaks prior to backfilling. All new water system components shall be thoroughly flushed before putting into service.

7-16.4 Measurement

No specific unit of measurement will apply to the lump sum Bid item ""Water System Improvements (East)", or "Water System Improvements (West)".

7-16.5 Payment

Payment shall be made in accordance with Section 1-04.1 for the following bid items:

"Water System Improvements (East)", lump sum.
"Water System Improvements (West)", lump sum.

The lump sum contract price shall be full pay for furnishing all labor, materials, tools, equipment and incidentals necessary to complete the water system improvements as specified, including but not limited to submittals, potholing to investigate existing utilities, and installation of the water system components (valves, valve boxes, tapping saddles, service lines, meter box w/setter and meter, reduced pressure backflow assemblies, water sampling station, etc), and pressure testing and flushing of the components. It does not include traffic control, the removal of existing utilities and structures ("Removal of Structures and Obstructions"), or excavation and backfill ("Pipe Zone Bedding" and "Crushed Surfacing Base Course"), pavement patching, pavement planning and overlay, or curb construction.

END OF DIVISION 7

DIVISION 8: MISCELLANEOUS CONSTRUCTION

8-01 EROSION CONTROL AND WATER POLLUTION CONTROL

8-01.1 Description

Supplement this section with the following:

The Contractor shall install and maintain all temporary and permanent erosion control measures and Best Management Practices (BMPs) in accordance with the Contract Documents, Standard Specifications, and as directed by the Engineer prior to clearing, grubbing, or grading or as necessary as clearing and grading progress.

The Contractor shall provide erosion control as required for material stockpiled within the City limits at no cost to the City. The Engineer, in the event of an emergency, and as weather and field conditions dictate, may require additional erosion controls and BMPs.

8-01.2 Materials

8-01.3 Construction Requirements

Supplement this section with the following:

Contractor shall bear sole responsibility for damage to completed portions of the project and to property located off the project caused by erosion, siltation, runoff, or other related elements during the construction of this project. Contractor shall also bear sole responsibility for any pollution of rivers, streams, or other water within or adjacent to the project area or that may occur as a result of construction operations.

Any area not covered with established, stable vegetation where no further work is anticipated for a period of 15 days, shall be immediately stabilized with the approved erosion and sedimentation control methods (e.g., seeding and mulching, straw). Where seeding for temporary erosion control is required, fast germinating grasses shall be applied at an appropriate rate (e.g., perennial rye applied at approximately 80 pounds per acre).

Silt, mud, dirt, and all debris shall be removed from the roadway at the end of each working day or at any point where materials are tracked outside of the Project Limits.

At no time shall more than 1 foot of sediment be allowed to accumulate within a catch basin. All catch basins and conveyance lines shall be cleaned at a time designated by the City Construction Inspector. The cleaning operation shall not flush sediment-laden water into the downstream system. The cleaning shall be conducted using an approved vacuum truck capable of jet-rodding the lines. The collection and disposal of the sediment shall be the responsibility of the Contractor at no cost to the City of Fife.

8-01.3(8) Street Cleaning

Supplement this section with the following:

The Contractor shall provide for cleaning of all paved surfaces that have become dirty as a result of the execution of this project. This shall be done at the completion of each day's activities or more often if so directed by the Engineer.

8-01.3(9)D Inlet Protection

Supplement this section with the following:

Catch Basin Inserts shall meet the requirements of WSDOT Standard Plan I-40.20-00. The simple placement of a permeable geotextile material under a catch basin grate is not acceptable.

Catch Basin Inserts shall be installed on all existing catch basins within the project area that receive runoff from the project site.

Deposits within the inlet protection device shall be removed when the depth of accumulated sediment and debris reaches approximately one-half the height of the internal device (or less if so specified by the manufacturers). Contractor shall be responsible for removing catch basin inserts upon completion of the project.

8-01.3(16) Removal

Supplement this section with the following:

Removing Temporary Erosion / Water Pollution Control BMPs

The Contractor shall removal all Temporary Erosion / Water Pollution Control BMPs within twenty (20) days after final stabilization, restoration, or after the BMPs are no longer needed. Trapped sediment shall be removed or stabilized onsite.

8-01.3(17) Suspension of Work

Supplement this section with the following:

If at any time during the life of this Contract it becomes necessary to suspend work due to weather conditions or other constraints, it shall be the Contractor's responsibility to meet the Temporary Erosion and Sediment Control requirements of the Contract Documents, including maintenance and repair of BMPs already installed, at all times during suspension.

8-01.4 Measurement

Replace this section with the following:

No specific unit of measurement will apply to the lump sum Bid item "Erosion Control and Water Pollution Control".

8-01.5 Payment

Replace this section with the following:

Payment shall be made in accordance with Section 1-04.1 for the following bid items:

The lump sum contract price for "Erosion Control and Water Pollution Control" shall be full pay for furnishing all labor, materials, tools, equipment and incidentals necessary for the installation of a high visibility fence on the border of the work area, and for the control of pollution, erosion, runoff, and related damage from the construction work. Control mechanisms include the installation and maintenance of catch basin inlet protection and sediment control barriers, and performing street cleaning.

8-02 ROADSIDE RESTORATION

8-02.1 Description

Replace this section with the following:

This work shall include grading in-situ soils as well as new fill, consisting of crushed surfacing base course (CSBC), and adding topsoil to these areas to the specified depth to prepare the areas for planting and finished landscaping under a separate City contract. The restoration work is located in currently landscaped areas at the pump station sites, as indicated in the Contract Drawings or where designated by the Engineer.

8-02.2 Materials

Replace this section with the following:

Refer to Section 8-02.3(4) of these Special Provisions.

8-02.3 Construction Requirements

Supplement this section with the following:

The Contractor shall take necessary measures to prevent erosion and siltation of down-stream facilities and adjacent properties.

8-02.3(1) Responsibility During Construction

Supplement this section with the following:

Contractor shall locate all underground utilities prior to starting work and shall not disturb or damage them. The Contractor shall promptly notify the Engineer of any conflict between proposed work and the obstructions. The Contractor shall be responsible for making any and all repairs for damage, at his own expense. Areas outside of the work limits shown on the Plans which are disturbed by the Contractor's operations, shall be restored by the Contractor at no additional cost to the City.

Topsoil shall not be added to the designated areas until all construction activities have been completed in the area.

8-02.3(4) Topsoil

Section 8-02.3(4) is supplemented with the following:

Topsoil Type A shall be a soil mixture consisting of 1/3 volume sandy loam, 1/3 volume compost (per Section 9-14.4(8) of the WSDOT Standard Specifications for composition), and 1/3 volume washed sand. Mixing shall occur prior to topsoil placement and result in a homogenous soil blend. Soil mixing in planting areas is not acceptable. Engineer shall approve topsoil material prior to placement. Prior to topsoil placement, the native ground surface shall be scarified to a 6 inch depth.

8-02.3(5) Planting Area Preparation

Supplement this section with the following:

All grades shall be maintained in the areas to be planted in a true and even condition. The Contractor shall be careful not to disturb any of the existing fill or cut slopes. Where final grades have not been established, the areas shall be finish graded and all surfaces left in an even and compacted condition. The finished grade shall be such that after planting, the grade shall be flush with adjoining surfaces; positive drainage shall also be maintained.

Add the following new section:
(*****)

8-05 BOLLARDS

8-05.1 Description

This work shall consist of furnishing and installing steel bollards in accordance with the Plans, Standard Plans, and these Specifications, at the locations shown in the Plans.

8-05.2 Materials

8-05.2(1) Posts and Hardware

Type 2 bollard posts shall be ASTM A 53, NPS 3 (3" Nom.) schedule 80 steel pipe.

Steel plate shall be per ASTM A 36.

All steel parts shall be hot-dip galvanized after fabrication in accordance with AASHTO M 111.

8-05.2(2) Reflective Tape

Reflective tape shall be one of the following or an approved equal:

- Scotchlite High Intensity Grade Series 2870
- Reflexite AP-1000
- Scotchlite Diamond Grade LDP Series 3970
- T-6500 High Intensity (Type IV)

8-05.2(3) Concrete

Footings shall be constructed using concrete Class 3000.

8-05.3 Construction Requirements

Bollards shall be constructed in accordance with the Standard Plans and per the details shown in the plans.

Bollards shall not vary more than 1/2 inch in 30 inches from a vertical plane.

Type 2 bollard posts shall be painted in accordance with Contract Specification 09900, System B-1 for galvanized surfaces. The top coat shall match Federal Standard 595, Color No. 33538 Traffic Signal Yellow.

8-05.4 Measurement

Measurement for "Bollards, Type 2" will be per each unit furnished and installed.

8-05.5 Payment

Payment shall be made in accordance with Section 1-04.1 for the following bid items:
"Bollards, Type 2"

8-14.5 Payment

Supplement this section with the following:

Payment shall be made in accordance with Section 1-04.1 for the following bid items:

The lump sum contract price for "Modified Cement Concrete Curb Ramp Type Single Direction A" per each shall be full payment for installing the curb ramp shown in the Contract Drawings for PS-10, including the "Detectable Warning Surface" and the pedestrian curb at the base of the ramp.

Add the following new section:
(*****)

8-30 ASSIST CITY WITH SST SLIDE GATE REPAIR

8-30.1 Description

This work shall consist of providing assistance to the City to repair the existing SST slide gates at PS-5 and PS-6. The slide gate (3'-0" x 3'-0") serving the active wetwell at each of these pump stations currently leak and the seals require complete replacement. After the wetwell has been cleaned and prior to sandblasting, the Contractor is to remove the slide gate by detaching the stem and unbolting the frame from the concrete wall (drawings for the existing gate are shown in Appendix G). The Contractor is to remove the gate from the wetwell and turn it over to the City Sewer Maintenance Department, which will oversee the repairs. After the gate has been repaired, the City will turn the gate back over to the Contractor for re-installation. The Contractor shall notify the City when the gate has been reinstalled, and the City will arrange for an inspection of the gate by the manufacturer (Golden Harvest, Burlington, WA) to confirm proper installation and obtain the manufacturer's certification letter.

8-30.2 Measurement

No specific unit of measurement will apply to the lump sum Bid item "Assist City with SST Slide Gate Repair."

8-30.3 Payment

Payment shall be made in accordance with Section 1-04.1 for the following bid items:

The lump sum contract price for "Assist City with SST Slide Gate Repair" shall be full pay for furnishing all labor, materials, tools, equipment and incidentals necessary to coordinate with the City on the removal and reinstallation of the SST slide gate as described at PS-5 and PS-6. This includes the cost of operating of the sewage bypass system while the SST slide gate is being removed/reinstalled. No force account costs are to be included in the payment for this bid item.

Add the following new section:
(*****)

8-31 INFLUENT LINE INSPECTION

8-31.1 Description

This work consists of the TV inspection of the 36-inch diameter reinforced concrete pipe (RCP) influent lines at PS-5 (approximately 130 ft long) and PS-6 (approximately 20 ft long). The inspection shall be conducted after the sewage bypass system has been installed and the pump station has been cleaned, and the existing pumps removed.

The inspection is to be conducted by:
Bravo Environmental Engineering NW
Eric Sullivan, (425) 424-9000
6437 South 144th St
Tukwila, WA 98168

The inspection shall be conducted in accordance with NASSCO (the National Association of Sewer Service Companies) Pipeline Assessment Certification Program (PACP). The inspection shall be scheduled to not interfere with coating work.

The influent line is to be thoroughly cleaned by water jetting prior to the inspection, and the cleaning water and debris shall be vactored from the wetwell, and disposed of per Washington Department of Ecology regulations.

The inspection report is to clearly describe the condition of the existing polyurea pipe lining, and any exposed concrete. The report is to be in pdf format with color photos. Provide a CD-ROM of the inspection. The report is to be submitted within 5 working days of the inspection.

8-31.2 Measurement

No specific unit of measurement will apply to the lump sum Bid item “Influent Line Inspection”.

8-31.3 Payment

Payment shall be made in accordance with Section 1-04.1 for the following bid items:

The lump sum contract price for “Influent Line Inspection” shall be full pay for furnishing all labor, materials, tools, equipment and incidentals necessary to provide TV inspection of the influent lines at PS-5 and PS-6. This includes the cost of the inspections, as well as operating of the sewage bypass system for the duration of the inspection, and providing access to the pump station influent channels to the inspection crew on the day the inspection is scheduled. No force account costs are to be included in the payment for this bid item.

Add the following new section:
(*****)

8-32 BID ALTERNATIVE NO.1--CURED IN PLACE PIPE (CIPP) FOR INFLUENT LINE

8-32.1 Description

Depending on the results of the TV inspection of the 36-inch diameter reinforced concrete pipe (RCP) influent lines to PS-5 (approximately 130 ft long) and PS-6 (approximately 20 ft long), the Contracting Agency may elect to have a cured-in-place pipe (CIPP) installed in one, or both of the influent lines.

This work is to be performed when the sewage bypassing system is in operation at each of the pump stations. The upstream manhole at both pump stations will be plugged, therefore the CIPP must be able to be installed from the influent channel of the pump station. As shown in the Contract Drawings, the sewer plug in the upstream manhole is to have an 8-inch diameter through-pipe which could be used during the installation of the CIPP if needed (for venting, for cable access to winch the liner into place, etc). There are no side sewer connections on the influent lines to the pump stations.

8-32.2 Referenced Documents

This section incorporates by reference the latest revisions of the following documents:

1. ASTM F1216, Rehabilitation of Existing Pipelines and Conduits by the Inversion and Curing of a Resin-Impregnated Tube.
2. ASTM F1743, Rehabilitation of Existing Pipelines and Conduits by Pulled-in-Place Installation of Cured-in-Place Thermosetting Resin Pipe (CIPP)
3. ASTM D5813, Cured-in-Place Thermosetting Resin Sewer Pipe
4. ASTM D790, Test Methods for Flexural Properties of Un-reinforced and Reinforced Plastics and Electrical Insulating Materials
5. ASTM D2990, Tensile, Compressive, and Flexural Creep and Creep-Rupture of Plastics

In case of conflicting requirements between this specification and these referenced documents, this specification will govern.

8-32-3 Submittals

Submit information the following information (See Contract Specification 01300 for procedures):

1. Shop drawings for the CIPP liner. Pipe sizing calculations to show that the liner has been properly sized to avoid the creation of wrinkles or folds.
2. Certification showing that the Installer is licensed by the manufacturer to install the CIPP.
3. Details on all lining materials and resins.
4. Technical data showing that the cured CIPP system meets the chemical resistance, corrosion resistance, flexural strength, flexural modulus, and long term flexural modulus requirements of this section.
5. Include certification that that the liner system is in compliance with the specifications for this project.

6. Volume of resin per unit of liner, roller gap setting, mixing ratios, mixing procedures, pot life of resin, required wet out procedures for the liner.
7. Installer's data sheets for each CIPP showing quantity of resin and catalyst used for each length of liner, roller gap setting used, and other information necessary to confirm proper wet-out of the liner.
8. Installer's recommendations for minimum and maximum pressures, temperatures, and time durations to be used during liner inversion, cure, and cool down.
9. CD-ROM of completed liner.

8-32-4 Materials

8-32-4(1) Tube

The sewn tube shall consist of one or more layers of absorbent non-woven felt fabric and meet the requirements of ASTM F1216, Section 5.1 or ASTM F1743, Section 5.2.1 or ASTM D 5813, Sections 5 and 6. The tube shall be constructed to withstand installation pressures, have sufficient strength to bridge missing pipe, and stretch to fit irregular pipe sections. The tube may also contain felt layers reinforced with glass or carbon fibers. Seams in the Tube shall be stronger than the non-seamed felt material.

The wet out tube shall have a relatively uniform thickness that when compressed at installation pressures will equal or exceed the calculated minimum design CIPP wall thickness.

The Tube shall be manufactured to a size that when installed will tightly fit the internal circumference and length of the original pipe. Allowance should be made for circumferential stretching during installation.

The outside layer of the Tube shall be coated with an impermeable, flexible membrane that will contain the resin and allow the resin impregnation (wet out) procedure to be monitored.

The wall color of the interior pipe surface of CIPP after installation shall be a relatively light reflective color so that a clear detailed examination with closed circuit television inspection equipment may be made.

The Tube shall be marked for distance at regular intervals along its entire length, not to exceed 5 ft. Such markings shall include the Manufacturers name or identifying symbol.

8-32-4(2) Resin

The resin system shall be a corrosion resistant polyester or vinyl ester system including all required catalysts, initiators that when cured within the tube create a composite that satisfies the requirements of ASTM F1216, ASTM D5813 and ASTM F1743, the physical properties herein, and those which are to be utilized in the submitted and approved design of the CIPP for this project.

8-32-5 Structural Requirements

The CIPP shall be designed as per ASTM F1216, Appendix X.1. The CIPP design shall assume no bonding to the original pipe wall. The cured pipe material (CIPP) shall conform to the structural properties, as listed below (cured polyester composite).

Property	Test Method	min. per ASTM F1216	This Project

Modulus of Elasticity	ASTM D790	250,000 psi	400,000 psi
Flexural Stress	ASTM D790	4,500 psi	4,500 psi

8-32-6 Approved Manufacturers

The manufacturer for the CIPP shall be:

1. Insituform, (678) 557-0546
2. Michels, (503) 364-1199
3. Or approved equal

8-32-7 Installation

The Contractor shall re-clean and inspect the line if it has contained sewage since the time it was cleaned and TV-inspected. Remove all internal debris out of the sewer line that will interfere with the installation of CIPP. The cleaning water and debris shall be vactored from the wetwell, and disposed of per Washington Department of Ecology regulations.

CIPP installation shall be in accordance with ASTM F1216, Section 7, or ASTM F1743, Section 6, with the following modifications:

1. Resin Impregnation - The quantity of resin used for tube impregnation shall be sufficient to fill the volume of air voids in the tube with additional allowances for polymerization shrinkage and the potential loss of resin during installation through cracks and irregularities in the original pipe wall, as applicable.
2. Tube Insertion – The wet out tube shall be positioned in the pipeline using either inversion or a pull-in method as defined within relevant ASTM standards previously stipulated. If pulled into place, a power winch or its equivalent should be utilized and care should be exercised not to damage the tube as a result of pull-in friction. The tube should be pulled-in or inverted through an existing manhole or approved access point and fully extend to the next designated manhole or termination point.
3. Temperature gauges shall be placed between the tube and the host pipe's invert position to monitor the temperatures during the cure cycle.
4. Curing shall be accomplished by utilizing hot water under hydrostatic pressure or steam pressure in accordance with the manufacturer's recommended cure schedule. A cool-down process shall be conducted that complies with the resin manufacturer's specification

Visual inspection of the CIPP shall be in accordance with ASTM F1743, Section 8.6.

Upon acceptance of the installation work and testing, the Contractor shall restore the project area affected by the operations to a condition at least equal to that existing prior to the work.

8-32.8 Measurement

No specific unit of measurement will apply to the lump sum Bid item "Cured In-Place Pipe (CIPP) for Influent Line."

The Contractor's costs for supporting the CIPP work shall be measured as follows:

“Bypass and Miscellaneous Equipment Cost” shall be measured by the day per Contract Specification 01020, Force Account Procedures. This shall be the rate established for the Chemical Injection Grouting of Leakage Areas in the Wetwell.

“Labor cost” shall be measured by the hour per Contract Specification 01020, Force Account Procedures.

8-32.9 Payment

Payment shall be made in accordance with Section 1-04.1 for the following bid items:

The lump sum contract price for “Cured In-Place Pipe (CIPP) for Influent Line,” “Bypass and Miscellaneous Equipment Cost,” and “Labor Cost” shall be full pay for furnishing all labor, materials, tools, equipment and incidentals necessary to provide a CIPP for the influent line at PS-5 or PS-6. This includes submittals, a pre-inspection of the influent line and cleaning if necessary, installation of the CIPP, and documentation of the finished liner.

It also includes the operation of the sewage bypass system during the time period that the CIPP work is being performed, and the Contractor’s labor for assisting in the CIPP work (coordinating with the CIPP subcontractor on-site, and providing access to the wetwell).

END OF DIVISION 8

DIVISION 9: MATERIALS

9-03 AGGREGATES

9-03.12 Gravel Backfill

9-03.12(3) Gravel Backfill for Pipe Zone Bedding (Pea Gravel)

Section 9-03.12(3) shall be revised as follows:

(******)
Gravel backfill for pipe zone bedding shall consist of naturally occurring, washed pea gravel, conforming to the following specifications. The aggregate shall be free from various types of wood waste or other extraneous or objectionable materials, and shall meet the following Specifications for grading and quality:

Sieve Size	Percent Passing
1/2” square	100
3/8” square	90-100
U.S. No. 4	0-100
U.S. No. 8	0-5

No more than 20% of the aggregate shall be crushed and shall have only one fractured face.

END OF DIVISION 9

DIVISION 10: TACOMA PUBLIC UTILITIES SPECIAL PROVISIONS

The following Tacoma Public Utilities (TPU) Special Provisions are applicable to work that will be done by the Contractor to install Tacoma Public Utilities facilities and infrastructure at the PS-10 site.

This work is identified in the Plans and these Specifications. This work is included in and made part of this contract between the Contractor and the Contracting Agency. Tacoma Public Utilities has entered into a separate agreement with the Contracting Agency to have this work incorporated into this project.

Utility Plan sheets E-103 through E-103B describe the work included under this Contract to support the relocation of the existing Tacoma Public Utilities primary power around the pump station site. TPU will perform the installation of the new electrical equipment and cabling as outlined on the plans and in the Letter of Agreement.

The Contractor is also referred to Section 1-07.17 of these Special provisions for Contractor coordination responsibilities for utility work.

These Special Provisions are made a part of this contract and supersede any conflicting provisions of the *2014 Standard Specifications for Road, Bridge, and Municipal Construction* (English), the foregoing Amendments to the Standard Specifications, the foregoing Special Provisions, and the foregoing Special Provisions for other utility work.

For clarification purposes (not contractual purposes) this work will be referred to as Tacoma Power work.

The Letter of Agreement between the City of Fife and Tacoma Public Utilities can be found in Appendix F. It is considered a part of these special provisions and the Contractor is obligated to comply with the terms and conditions outlined in this document.

10-01 DESCRIPTION OF WORK

The work to be performed under these plans and specifications consists of the installation of the conduit, concrete vaults, and other facilities to support the relocation of the existing 15kv primary power around the PS-10 site, and to provide a new 480Y/277 volt, 3-phase, 4-wire service to this pump station.

1. All trenching for primary vaults and conduits. Standard C-UG-1100 applies.
2. All primary and secondary conduits. Standard C-UG-1100 applies.
3. Install transformer vault. Standards A-UG-1200, C-UG-1700 and C-UG-2000 apply.
4. Concrete junction box. Standards, C-UG-1100, C-UG-1500, and C-UG-2000 apply.
5. Meter base per Tacoma Power standards. See Tacoma Power Electric Service Handbook chapter 13.
6. All required permits for electrical work.
7. Coordination with Tacoma Power and verification of all Tacoma Power requirements, standards, and inspections related to the work

10-02 LOCATION

The PS-10 site is located at 3949 Industry Drive E in the City of Fife, Pierce County, Washington.

10-03 QUALIFICATIONS OF CONTRACTORS

All work for Tacoma Power must be completed under the direct supervision of a qualified electrical subcontractor or electrician and must be licensed in the State of Washington in accordance with Chapter 19.28, Revised Code of Washington (RCW). All work must be completed in accordance with the Tacoma Power design, construction, and inspection standards.

10-04 WORK TO BE PERFORMED BY THE CONTRACTOR

The Contractor shall furnish, provide and pay for all materials, labor, tools, equipment, transportation, and other facilities necessary for the execution and completion of the work in accordance with these specifications and as shown on the Plans.

The Contractor shall be required to perform or provide the items listed below (refer to the plans and the Letter of Agreement in Appendix F for a complete listing of requirements):

1. Prior to any construction, the Contractor shall contact the TPU Project Engineer to schedule a pre-construction meeting with the Line Department Inspector.
2. Excavation, backfill, and compaction necessary for the utility relocation work.
3. Installation of an internally grounded, concrete transformer vault (No. 554 per Standard C-UG-2000) according to Standards A-UG-1200 and C-UG-1700 for three-phase transformers for site excavation and vault specifications with location on the west side of the pump station site.
4. Guard posts shall be installed at the transformer location according to Standard C-UG-1400. The transformer will not be installed until an acceptable transformer guard is installed.
5. Installation of an internally grounded, concrete junction box (No. 554 per Standard C-UG-2000) with H-20 lid, with a spring-loaded door according to Standards C-UG-1100 and C-UG-1500 with location on the east side of the pump station site.
6. Installation of Sch 40 PVC conduit around the north side of the pump station site between the junction box and the transformer vault, and junction box and reconnection to existing raceways in accordance with Standard C-UG-1100.
7. Coordinate with the TPU Electrical Inspector for the inspection of all work.
8. Coordinate construction activities with other utilities (i.e., water, natural gas, telephone and cable).
9. Proof primary conduit using a Tacoma Power approved mandrel after backfilling. The conduit is to be fished and swabbed upon completion of the installation. Proving shall then be demonstrated with Tacoma Power's authorized Transmission and Distribution (T&D) Construction Inspector present. After proving that the conduit is free from obstruction, the Contractor shall leave a 1/8th-inch diameter polypropylene fish cord in the conduit.
10. Provide meter base per Tacoma Power's "Electrical Service Handbook" requirements.

10-05 WORK TO BE PERFORMED BY TPU

Tacoma Power will perform the following work:

1. Supply and install 75 KVA transformer, 3 phase, 277/480V (on the vault provided and installed by the Contractor).
2. Supply and install all 15 KV primary cables (conduit provided and installed by the Contractor).
3. Terminate all 15 KV cables at the vaults and transformer.
4. Terminate customer's service wire in the pad-mount transformer.
5. Supply and set permanent meter for 200A 277/480V service when approved for electrical service.
6. Remove existing 120/208 volt pad mount transformer (South of Industry Drive), cables, and concrete pad.
7. Cap existing 4" conduit at old transformer.

10-06 COORDINATION WITH TPU

It shall be the Contractor's responsibility to maintain communication with Tacoma Power's inspector(s) to coordinate construction of the underground electrical system. The Contractor will be required to schedule the work accordingly and shall keep Tacoma Power's engineer informed of such schedules.

10-07 SPECIFICATIONS AND DRAWINGS

The Contractor shall keep a copy of the drawings and the specifications on the work site and shall at all times give TPU's inspector and engineer access thereto.

10-08 TYPICAL CONTRACT DRAWINGS

The following lists of standard drawings are made a part of these specifications. Copies of the standard drawings are available at Tacoma Power's web site (www.tacomapower.com).

Drawing No.	Sheet No.	Title
A-UG-1150	1 thru 23	Precast Concrete Vaults
A-UG-1200	1 thru 3	Padmounted Transformer, Location Requirements
C-UG-1100	1 thru 10	Conduit Installations
C-UG-1300	1 thru 10	Residential Joint Utility Trench
C-UG-1400	1 thru 11	Pad-Mount Equipment Guard Posts Installation
C-UG-1500	1 thru 6	Primary Junction Box Installation
C-UG-1700	1 thru 7	Transformer Vault Installation
C-UG-2000	1	Precast Concrete Vaults Approved Vendors

10-09 PERSONS TO BE CONTACTED

The following is a list of persons who may need to be contacted prior to or during progress of the work.

Tacoma Power:

Dan Reed	Senior Engineer	253-502-8292
David Lee (Click)	Telecom P&D Tech	253-502-8869

10-10 INSPECTION

The Engineer will have overall responsibility for the inspection and approval of all work on this project. However, all Tacoma Power work will also be inspected and must be approved by Tacoma Power before it will be accepted by the Engineer.

An Inspector assigned by Tacoma Power will perform construction inspection and inspection of conduit proofing. The Inspector will be responsible for ensuring that the Contractor is complying with the contract plans and specifications.

Construction Inspection Checklist

The Contractor shall be required to contact the Engineer and Tacoma Power 24-hours in advance, weekends and holidays excluded, of all of the construction activities listed below, and have the indicated activity inspected, and have Tacoma Power's Inspector sign the checklist to acknowledge that the work was performed in accordance with the appropriate construction standards.

The checklist shall be posted near the construction site and be available for review by Tacoma Power at all times. These inspections shall be in addition to any required inspections by state or local jurisdictions.

1. One-call contact _____
2. Layout of structures and conduit _____
3. Structure installation prior to backfill
   - a. Safe and legal excavation _____
   - b. Escape ladder (if applicable) _____
   - b. Level floor _____
   - c. Correct grade and alignment _____
4. Conduit installation prior to backfill or encasement
   - a. a. Correct number, size and spacing of conduit _____
   - b. b. Perpendicular to structures at entry location _____
5. Conduit proofing
   - a. Cleaned with rags _____
   - b. Proper mandrel passes every duct _____

c. Tru-tape installed _____

6. Riser and lid installation (if applicable) _____

7. Street cutting/crossing/repair (if applicable) _____

8. Temporary patching (if applicable) _____

9. Final patching (if applicable) _____

10-11 PRE-CAST CONCRETE/FIBERGLASS STRUCTURES

10-11.1 Description

The provisions of this section cover the installation of pre-cast concrete or plastic electrical structures. This work includes excavation, the construction of shoring as necessary, pumping and controlling groundwater and surface water run-off which may be necessary for the execution of the work, and the placement and compaction of all necessary backfill to the final ground elevation.

10-11.2 Materials

The Contractor is to provide the conduit, vaults, vault lids (no temporary covers) and fittings. The Contractor is to provide all backfill, AC pavement repair, concrete pavement, and concrete curb repair to restore the site per the Contracting Agency's Contract Documents.

10-11.3 Construction Requirements

The Contractor shall place all pre-cast concrete electrical structures, as shown on the PS-10 Rehabilitation Electrical Plans, and detailed in Tacoma Power Construction Standard C-UG-1100, C-UG-1500, and C-1700 apply. The Contractor's work shall meet all applicable local, state, and federal codes for shoring and shall be in compliance with Section 7-08.3(1)B of the Standard Specification.

The contractor shall construct pads for the pre-cast concrete structures at the locations indicated on the plans. The pads shall be constructed of crushed rock compacted to a depth of twelve (12) inches on undisturbed soil per Tacoma Power's standard specifications. This material shall be compacted to at least 95% of the maximum dry density.

Transformer structures shall be set at the elevation indicated on the drawings, which is one (1) inch above surrounding finished grade with ground sloped away from structure for drainage. The lid will set above grade. Junction boxes will be set so the top of the lid is at finished grade.

Excess material obtained from structure and/or trench excavation shall be removed from the construction area and disposed of by the Contractor.

Backfill material shall meet the requirements for Crushed Surfacing Base Course Section 9-03.9(3) of these Standard Specifications. Backfill material shall be compacted in accordance with Section 7-08.3(3) of the Standard Specifications. Care should be exercised when backfilling to place backfill around and under the ribs of the structures. Large rocks or other obstructions in the bottom of the excavation, which may cause damage to the structures, shall be removed.

Dewatering of the excavation area shall be done by the Contractor as necessary to allow the structure to be placed on firm, unyielding material.

All pre-cast concrete structures shall be internally grounded per Tacoma Power Standard A-UG-1150.

10-12 TRENCH EXCAVATION, BACKFILL, AND COMPACTION

10-12.1 Description

The provisions of this section cover the removal or excavation of all materials, of whatever nature, necessary for the placement of electrical and communication conduit. This section also contains the provisions which govern the construction of all shoring and pumping of groundwater which may be necessary for the execution of the work, and placement and compaction of all necessary backfill to the final subgrade elevation.

It is the intent that the primary electrical and communication conduits be placed in a common trench. The minimum trench width shall be 24-inches, and not wider than practicable for installation of the cable and conduit. Trench depths shall be such as to provide the minimum cover from the top of the conduit to the final grade as shown on the contract drawings. Other conduits for other utilities may be installed within this same trench.

The minimum cover of the primary power conduit (underlain by a minimum of 2-inches of CSBC) is to be a minimum of 36-inches. The Contractor shall coordinate work with the installation of other utilities to avoid conflicts at each utility crossing. Any adjustments to franchise utility conduits due to conflicts with other utilities shall be completed at no expense to the Contracting Agency.

The bottom of all trenches shall be smooth, uniform, free of all loose rock, stone, other sharp objects, and foreign material. Hand fill where large rocks are encountered and as directed by the Engineer.

Excavations in excess of the depth necessary for the trench shall be backfilled with CSBC and compacted to 95% of the maximum dry density. All backfill material is to be CSBC. Backfill up to the elevation of the bottom of the topsoil layer in landscaped areas, and up to the bottom of the crushed surfacing top course (CSTC) in roadway and parking areas.

Any required CDF shall be formulated and installed per Tacoma Power Construction Standard C-UG-1100.

All excess excavated material from all trenches shall be removed from the site without contaminating existing finished subgrade material.

The Contractor shall shore all trenches or other excavations and meet all applicable local, state, and federal codes in accordance with Section 7-08.3(1)B. All costs for shoring shall be included in the bid item for “Shoring, PS-10.”

10-13 INSTALL CONDUIT AND FITTINGS

10-13.1 Description

This work shall consist of installing the necessary conduit, elbows, saddles, joints and other bends, to the size and lengths shown on the Plans, proofing, and other work in accordance with the Plans, these specifications, and Tacoma Power standard plans in conformity with the lines and grades as staked. This work includes proofing, installing fish cord, and other work to provide a complete work product.

10-13.2 Construction Requirements

All electrical conduits and elbows shall be installed in accordance with the PS-10 Electrical Plans to provide the minimum cover shown. All conduits entering a vault shall extend 4” into the vault and do so at 90 degrees to the face of the vault. All conduits shall have bell ends installed and be grouted. The minimum radius of elbows used in all conduit installations shall be as indicated in Standard Drawing C-UG-1100.

PVC Schedule 40 conduit shall conform to ANSI/ASTM F512-77 or latest revision.

All proofing shall be accomplished after final grade is established.

The Contractor will proof all conduits using a Tacoma Power approved mandrel, with an authorized Tacoma Power inspector present. The conduits are to be swabbed and fished by the Contractor upon completion of the installation. The Contractor shall leave a 1/8-inch diameter polypropylene fish cord in each conduit.

10-13.3 Measurement

No specific unit of measurement will apply to the lump sum Bid item “TPU Power Relocation”.

10-13.4 Payment

“TPU Power Relocation,” lump sum:

The lump sum contract price for “TPU Power Relocation” shall be full pay for furnishing all labor, materials, tools, equipment and incidentals necessary to install the conduit, transformer vault, junction box, and other facilities as shown in the PS-10 Electrical Plans to support the relocation of primary power to avoid the PS-10 site, as well as provide power to PS-10. This includes approved utility submittals, obtaining the electrical permits, and coordinating and scheduling inspections with TPU.

It does not include the removal of utilities and structures (“Removal of Structures and Obstructions”), or excavation and backfill (“Crushed Surfacing Base Course”), pavement patching, pavement planning and overlay, or curb construction.

APPENDIX A

PIERCE COUNTY PREVAILING WAGE RATES

State of Washington
Department of Labor & Industries

Prevailing Wage Section - Telephone 360-902-5335
PO Box 44540, Olympia, WA 98504-4540

Washington State Prevailing Wage

The PREVAILING WAGES listed here include both the hourly wage rate and the hourly rate of fringe benefits. On public works projects, worker's wage and benefit rates must add to not less than this total. A brief description of overtime calculation requirements are provided on the Benefit Code Key.

Journey Level Prevailing Wage Rates for the Effective Date: 7/7/2014

County	Trade	Job Classification	Wage	Holiday	Overtime	Note
Pierce	Asbestos Abatement Workers	Journey Level	$41.69	5D	1H	
Pierce	Boilermakers	Journey Level	$64.44	5N	1C	
Pierce	Brick Mason	Brick And Block Finisher	$43.26	5A	1M	
Pierce	Brick Mason	Journey Level	$50.12	5A	1M	
Pierce	Brick Mason	Pointer-Caulker-Cleaner	$50.12	5A	1M	
Pierce	Building Service Employees	Janitor	$9.37		1	
Pierce	Building Service Employees	Shampooer	$10.08		1	
Pierce	Building Service Employees	Waxer	$10.08		1	
Pierce	Building Service Employees	Window Cleaner	$13.22		1	
Pierce	Cabinet Makers (In Shop)	Journey Level	$28.36		1	
Pierce	Carpenters	Acoustical Worker	$50.82	5D	1M	
Pierce	Carpenters	Bridge, Dock And Wharf Carpenters	$50.82	5D	1M	
Pierce	Carpenters	Carpenter	$50.82	5D	1M	
Pierce	Carpenters	Carpenters on Stationary Tools	$50.95	5D	1M	
Pierce	Carpenters	Creosoted Material	$50.92	5D	1M	
Pierce	Carpenters	Floor Finisher	$50.82	5D	1M	
Pierce	Carpenters	Floor Layer	$50.82	5D	1M	
Pierce	Carpenters	Scaffold Erector	$50.82	5D	1M	
Pierce	Cement Masons	Journey Level	$51.18	7A	1M	
Pierce	Divers & Tenders	Diver	$105.37	5D	1M	8A
Pierce	Divers & Tenders	Diver On Standby	$59.50	5D	1M	
Pierce	Divers & Tenders	Diver Tender	$54.82	5D	1M	
Pierce	Divers & Tenders	Surface Rcv & Rov Operator	$54.82	5D	1M	
Pierce	Divers & Tenders	Surface Rcv & Rov Operator Tender	$51.07	5A	1B	
Pierce	Dredge Workers	Assistant Engineer	$53.00	5D	3F	
Pierce	Dredge Workers	Assistant Mate (Deckhand)	$52.58	5D	3F	
Pierce	Dredge Workers	Boatmen	$52.30	5D	3F	
Pierce	Dredge Workers	Engineer Welder	$54.04	5D	3F	
Pierce	Dredge Workers	Leverman, Hydraulic	$55.17	5D	3F	

Pierce	Dredge Workers	Mates	$52.30	5D	3F	
Pierce	Dredge Workers	Oiler	$52.58	5D	3F	
Pierce	Drywall Applicator	Journey Level	$50.82	5D	1H	
Pierce	Drywall Tapers	Journey Level	$50.87	5P	1E	
Pierce	Electrical Fixture Maintenance Workers	Journey Level	$17.76		1	
Pierce	Electricians - Inside	Cable Splicer	$60.94	5C	1G	
Pierce	Electricians - Inside	Journey Level	$57.35	5C	1G	
Pierce	Electricians - Inside	Lead Covered Cable Splicer	$64.54	5C	1G	
Pierce	Electricians - Inside	Welder	$60.94	5C	1G	
Pierce	Electricians - Motor Shop	Craftsman	$15.37		1	
Pierce	Electricians - Motor Shop	Journey Level	$14.69		1	
Pierce	Electricians - Powerline Construction	Cable Splicer	$68.33	5A	4A	
Pierce	Electricians - Powerline Construction	Certified Line Welder	$62.50	5A	4A	
Pierce	Electricians - Powerline Construction	Groundperson	$42.56	5A	4A	
Pierce	Electricians - Powerline Construction	Heavy Line Equipment Operator	$62.50	5A	4A	
Pierce	Electricians - Powerline Construction	Journey Level Lineperson	$62.50	5A	4A	
Pierce	Electricians - Powerline Construction	Line Equipment Operator	$52.47	5A	4A	
Pierce	Electricians - Powerline Construction	Pole Sprayer	$62.50	5A	4A	
Pierce	Electricians - Powerline Construction	Powderperson	$46.55	5A	4A	
Pierce	Electronic Technicians	Journey Level	$32.39		1	
Pierce	Elevator Constructors	Mechanic	$80.14	7D	4A	
Pierce	Elevator Constructors	Mechanic In Charge	$86.77	7D	4A	
Pierce	Fabricated Precast Concrete Products	Journey Level - In-Factory Work Only	$9.32		1	
Pierce	Fence Erectors	Fence Erector	$22.56		1	
Pierce	Flaggers	Journey Level	$35.34	7A	3I	
Pierce	Glaziers	Journey Level	$53.76	7L	1Y	
Pierce	Heat & Frost Insulators And Asbestos Workers	Journeyman	$58.93	5J	1S	
Pierce	Heating Equipment Mechanics	Journey Level	$69.37	7F	1E	
Pierce	Hod Carriers & Mason Tenders	Journey Level	$42.99	7A	3I	
Pierce	Industrial Power Vacuum Cleaner	Journey Level	$9.32		1	
Pierce	Inland Boatmen	Boat Operator	$54.57	5B	1K	
Pierce	Inland Boatmen	Cook	$50.95	5B	1K	
Pierce	Inland Boatmen	Deckhand	$51.19	5B	1K	
Pierce	Inland Boatmen	Deckhand Engineer	$52.18	5B	1K	
Pierce	Inland Boatmen	Launch Operator	$53.40	5B	1K	
Pierce	Inland Boatmen	Mate	$53.40	5B	1K	
Pierce	Inspection/Cleaning/Sealing Of Sewer & Water Systems By	Cleaner Operator, Foamer Operator	$9.73		1	

	Remote Control					
Pierce	Inspection/Cleaning/Sealing Of Sewer & Water Systems By Remote Control	Grout Truck Operator	$11.48		1	
Pierce	Inspection/Cleaning/Sealing Of Sewer & Water Systems By Remote Control	Head Operator	$12.78		1	
Pierce	Inspection/Cleaning/Sealing Of Sewer & Water Systems By Remote Control	Technician	$9.32		1	
Pierce	Inspection/Cleaning/Sealing Of Sewer & Water Systems By Remote Control	Tv Truck Operator	$10.53		1	
Pierce	Insulation Applicators	Journey Level	$50.82	5D	1M	
Pierce	Ironworkers	Journeyman	$59.77	7N	1O	
Pierce	Laborers	Air, Gas Or Electric Vibrating Screed	$41.69	7A	3I	
Pierce	Laborers	Airtrac Drill Operator	$42.99	7A	3I	
Pierce	Laborers	Ballast Regular Machine	$41.69	7A	3I	
Pierce	Laborers	Batch Weighman	$35.34	7A	3I	
Pierce	Laborers	Brick Pavers	$41.69	7A	3I	
Pierce	Laborers	Brush Cutter	$41.69	7A	3I	
Pierce	Laborers	Brush Hog Feeder	$41.69	7A	3I	
Pierce	Laborers	Burner	$41.69	7A	3I	
Pierce	Laborers	Caisson Worker	$42.99	7A	3I	
Pierce	Laborers	Carpenter Tender	$41.69	7A	3I	
Pierce	Laborers	Caulker	$41.69	7A	3I	
Pierce	Laborers	Cement Dumper-paving	$42.46	7A	3I	
Pierce	Laborers	Cement Finisher Tender	$41.69	7A	3I	
Pierce	Laborers	Change House Or Dry Shack	$41.69	7A	3I	
Pierce	Laborers	Chipping Gun (under 30 Lbs.)	$41.69	7A	3I	
Pierce	Laborers	Chipping Gun(30 Lbs. And Over)	$42.46	7A	3I	
Pierce	Laborers	Choker Setter	$41.69	7A	3I	
Pierce	Laborers	Chuck Tender	$41.69	7A	3I	
Pierce	Laborers	Clary Power Spreader	$42.46	7A	3I	
Pierce	Laborers	Clean-up Laborer	$41.69	7A	3I	
Pierce	Laborers	Concrete Dumper/chute Operator	$42.46	7A	3I	
Pierce	Laborers	Concrete Form Stripper	$41.69	7A	3I	
Pierce	Laborers	Concrete Placement Crew	$42.46	7A	3I	
Pierce	Laborers	Concrete Saw Operator/core Driller	$42.46	7A	3I	
Pierce	Laborers	Crusher Feeder	$35.34	7A	3I	
Pierce	Laborers	Curing Laborer	$41.69	7A	3I	
Pierce	Laborers	Demolition: Wrecking & Moving (incl. Charred Material)	$41.69	7A	3I	
Pierce	Laborers	Ditch Digger	$41.69	7A	3I	
Pierce	Laborers	Diver	$42.99	7A	3I	
Pierce	Laborers	Drill Operator (hydraulic,diamond)	$42.46	7A	3I	

Pierce	Laborers	Dry Stack Walls	$41.69	7A	3I	
Pierce	Laborers	Dump Person	$41.69	7A	3I	
Pierce	Laborers	Epoxy Technician	$41.69	7A	3I	
Pierce	Laborers	Erosion Control Worker	$41.69	7A	3I	
Pierce	Laborers	Faller & Bucker Chain Saw	$42.46	7A	3I	
Pierce	Laborers	Fine Graders	$41.69	7A	3I	
Pierce	Laborers	Firewatch	$35.34	7A	3I	
Pierce	Laborers	Form Setter	$41.69	7A	3I	
Pierce	Laborers	Gabian Basket Builders	$41.69	7A	3I	
Pierce	Laborers	General Laborer	$41.69	7A	3I	
Pierce	Laborers	Grade Checker & Transit Person	$42.99	7A	3I	
Pierce	Laborers	Grinders	$41.69	7A	3I	
Pierce	Laborers	Grout Machine Tender	$41.69	7A	3I	
Pierce	Laborers	Groutmen (pressure)including Post Tension Beams	$42.46	7A	3I	
Pierce	Laborers	Guardrail Erector	$41.69	7A	3I	
Pierce	Laborers	Hazardous Waste Worker (level A)	$42.99	7A	3I	
Pierce	Laborers	Hazardous Waste Worker (level B)	$42.46	7A	3I	
Pierce	Laborers	Hazardous Waste Worker (level C)	$41.69	7A	3I	
Pierce	Laborers	High Scaler	$42.99	7A	3I	
Pierce	Laborers	Jackhammer	$42.46	7A	3I	
Pierce	Laborers	Laserbeam Operator	$42.46	7A	3I	
Pierce	Laborers	Maintenance Person	$41.69	7A	3I	
Pierce	Laborers	Manhole Builder-mudman	$42.46	7A	3I	
Pierce	Laborers	Material Yard Person	$41.69	7A	3I	
Pierce	Laborers	Motorman-dinky Locomotive	$42.46	7A	3I	
Pierce	Laborers	Nozzleman (concrete Pump, Green Cutter When Using Combination Of High Pressure Air & Water On Concrete & Rock, Sandblast, Gunite, Shotcrete, Water Bla	$42.46	7A	3I	
Pierce	Laborers	Pavement Breaker	$42.46	7A	3I	
Pierce	Laborers	Pilot Car	$35.34	7A	3I	
Pierce	Laborers	Pipe Layer Lead	$42.99	7A	3I	
Pierce	Laborers	Pipe Layer/tailor	$42.46	7A	3I	
Pierce	Laborers	Pipe Pot Tender	$42.46	7A	3I	
Pierce	Laborers	Pipe Reliner	$42.46	7A	3I	
Pierce	Laborers	Pipe Wrapper	$42.46	7A	3I	
Pierce	Laborers	Pot Tender	$41.69	7A	3I	
Pierce	Laborers	Powderman	$42.99	7A	3I	
Pierce	Laborers	Powderman's Helper	$41.69	7A	3I	
Pierce	Laborers	Power Jacks	$42.46	7A	3I	
Pierce	Laborers	Railroad Spike Puller - Power	$42.46	7A	3I	
Pierce	Laborers	Raker - Asphalt	$42.99	7A	3I	
Pierce	Laborers	Re-timberman	$42.99	7A	3I	
Pierce	Laborers	Remote Equipment Operator	$42.46	7A	3I	
Pierce	Laborers	Rigger/signal Person	$42.46	7A	3I	

Pierce	Laborers	Rip Rap Person	$41.69	7A	3I	
Pierce	Laborers	Rivet Buster	$42.46	7A	3I	
Pierce	Laborers	Rodder	$42.46	7A	3I	
Pierce	Laborers	Scaffold Erector	$41.69	7A	3I	
Pierce	Laborers	Scale Person	$41.69	7A	3I	
Pierce	Laborers	Sloper (over 20")	$42.46	7A	3I	
Pierce	Laborers	Sloper Sprayer	$41.69	7A	3I	
Pierce	Laborers	Spreader (concrete)	$42.46	7A	3I	
Pierce	Laborers	Stake Hopper	$41.69	7A	3I	
Pierce	Laborers	Stock Piler	$41.69	7A	3I	
Pierce	Laborers	Tamper & Similar Electric, Air & Gas Operated Tools	$42.46	7A	3I	
Pierce	Laborers	Tamper (multiple & Self-propelled)	$42.46	7A	3I	
Pierce	Laborers	Timber Person - Sewer (lagger, Shorer & Cribber)	$42.46	7A	3I	
Pierce	Laborers	Toolroom Person (at Jobsite)	$41.69	7A	3I	
Pierce	Laborers	Topper	$41.69	7A	3I	
Pierce	Laborers	Track Laborer	$41.69	7A	3I	
Pierce	Laborers	Track Liner (power)	$42.46	7A	3I	
Pierce	Laborers	Traffic Control Laborer	$37.79	7A	3I	8R
Pierce	Laborers	Traffic Control Supervisor	$37.79	7A	3I	8R
Pierce	Laborers	Truck Spotter	$41.69	7A	3I	
Pierce	Laborers	Tugger Operator	$42.46	7A	3I	
Pierce	Laborers	Tunnel Work-Compressed Air Worker 0-30 psi	$60.06	7A	3I	8Q
Pierce	Laborers	Tunnel Work-Compressed Air Worker 30.01-44.00 psi	$65.09	7A	3I	8Q
Pierce	Laborers	Tunnel Work-Compressed Air Worker 44.01-54.00 psi	$68.77	7A	3I	8Q
Pierce	Laborers	Tunnel Work-Compressed Air Worker 54.01-60.00 psi	$74.47	7A	3I	8Q
Pierce	Laborers	Tunnel Work-Compressed Air Worker 60.01-64.00 psi	$76.59	7A	3I	8Q
Pierce	Laborers	Tunnel Work-Compressed Air Worker 64.01-68.00 psi	$81.69	7A	3I	8Q
Pierce	Laborers	Tunnel Work-Compressed Air Worker 68.01-70.00 psi	$83.59	7A	3I	8Q
Pierce	Laborers	Tunnel Work-Compressed Air Worker 70.01-72.00 psi	$85.59	7A	3I	8Q
Pierce	Laborers	Tunnel Work-Compressed Air Worker 72.01-74.00 psi	$87.59	7A	3I	8Q
Pierce	Laborers	Tunnel Work-Guage and Lock Tender	$43.09	7A	3I	8Q
Pierce	Laborers	Tunnel Work-Miner	$43.09	7A	3I	8Q
Pierce	Laborers	Vibrator	$42.46	7A	3I	
Pierce	Laborers	Vinyl Seamer	$41.69	7A	3I	
Pierce	Laborers	Watchman	$32.12	7A	3I	
Pierce	Laborers	Welder	$42.46	7A	3I	

Pierce	Laborers	Well Point Laborer	$42.46	7A	3I	
Pierce	Laborers	Window Washer/cleaner	$32.12	7A	3I	
Pierce	Laborers - Underground Sewer & Water	General Laborer & Topman	$41.69	7A	3I	
Pierce	Laborers - Underground Sewer & Water	Pipe Layer	$42.46	7A	3I	
Pierce	Landscape Construction	Irrigation Or Lawn Sprinkler Installers	$17.07		1	
Pierce	Landscape Construction	Landscape Equipment Operators Or Truck Drivers	$14.55		1	
Pierce	Landscape Construction	Landscaping Or Planting Laborers	$17.07		1	
Pierce	Lathers	Journey Level	$50.82	5D	1H	
Pierce	Marble Setters	Journey Level	$50.12	5A	1M	
Pierce	Metal Fabrication (In Shop)	Fitter	$15.25		1	
Pierce	Metal Fabrication (In Shop)	Laborer	$10.32		1	
Pierce	Metal Fabrication (In Shop)	Machine Operator	$13.98		1	
Pierce	Metal Fabrication (In Shop)	Welder	$13.98		1	
Pierce	Millwright	Journey Level	$51.92	5D	1M	
Pierce	Modular Buildings	Journey Level	$9.32		1	
Pierce	Painters	Journey Level	$37.80	6Z	2B	
Pierce	Pile Driver	Journey Level	$51.07	5D	1M	
Pierce	Plasterers	Journey Level	$49.29	7Q	1R	
Pierce	Playground & Park Equipment Installers	Journey Level	$9.73		1	
Pierce	Plumbers & Pipefitters	Journey Level	$62.57	5A	1G	
Pierce	Power Equipment Operators	Asphalt Plant Operator	$53.49	7A	3C	8P
Pierce	Power Equipment Operators	Assistant Engineers	$50.22	7A	3C	8P
Pierce	Power Equipment Operators	Barrier Machine (zipper)	$53.00	7A	3C	8P
Pierce	Power Equipment Operators	Batch Plant Operator: Concrete	$53.00	7A	3C	8P
Pierce	Power Equipment Operators	Bobcat	$50.22	7A	3C	8P
Pierce	Power Equipment Operators	Brokk - Remote Demolition Equipment	$50.22	7A	3C	8P
Pierce	Power Equipment Operators	Brooms	$50.22	7A	3C	8P
Pierce	Power Equipment Operators	Bump Cutter	$53.00	7A	3C	8P
Pierce	Power Equipment Operators	Cableways	$53.49	7A	3C	8P
Pierce	Power Equipment Operators	Chipper	$53.00	7A	3C	8P
Pierce	Power Equipment Operators	Compressor	$50.22	7A	3C	8P
Pierce	Power Equipment Operators	Concrete Pump: Truck Mount With Boom Attachment Over 42m	$53.49	7A	3C	8P
Pierce	Power Equipment Operators	Concrete Finish Machine -laser Screed	$50.22	7A	3C	8P
Pierce	Power Equipment Operators	Concrete Pump - Mounted Or Trailer High Pressure Line Pump, Pump High Pressure	$52.58	7A	3C	8P
Pierce	Power Equipment Operators	Concrete Pump: Truck Mount With Boom Attachment Up To 42m	$53.00	7A	3C	8P
Pierce	Power Equipment Operators	Conveyors	$52.58	7A	3C	8P
Pierce	Power Equipment Operators	Cranes, 100 Tons - 199 Tons, Or 150 Ft Of Boom (including Jib	$54.04	7A	3C	8P

		With Attachments)				
Pierce	Power Equipment Operators	Cranes, 200 Tons To 300 Tons, Or 250 Ft Of Boom (including Jib With Attachments)	$54.61	7A	3C	8P
Pierce	Power Equipment Operators	Cranes: 20 Tons Through 44 Tons With Attachments	$53.00	7A	3C	8P
Pierce	Power Equipment Operators	Cranes: 45 Tons Through 99 Tons, Under 150' Of Boom (including Jib With Attachments)	$53.49	7A	3C	8P
Pierce	Power Equipment Operators	Cranes: A-frame - 10 Tons And Under	$50.22	7A	3C	8P
Pierce	Power Equipment Operators	Cranes: Friction 100 Tons Through 199 Tons	$54.61	7A	3C	8P
Pierce	Power Equipment Operators	Cranes: Friction Over 200 Tons	$55.17	7A	3C	8P
Pierce	Power Equipment Operators	Cranes: Over 300 Tons, Or 300' Of Boom (Including Jib With Attachments)	$55.17	7A	3C	8P
Pierce	Power Equipment Operators	Cranes: Through 19 Tons With Attachments A-frame Over 10 Tons	$52.58	7A	3C	8P
Pierce	Power Equipment Operators	Crusher	$53.00	7A	3C	8P
Pierce	Power Equipment Operators	Deck Engineer/deck Winches (power)	$53.00	7A	3C	8P
Pierce	Power Equipment Operators	Derricks, On Building Work	$53.49	7A	3C	8P
Pierce	Power Equipment Operators	Dozers D-9 & Under	$52.58	7A	3C	8P
Pierce	Power Equipment Operators	Drill Oilers: Auger Type, Truck Or Crane Mount	$52.58	7A	3C	8P
Pierce	Power Equipment Operators	Drilling Machine	$53.00	7A	3C	8P
Pierce	Power Equipment Operators	Elevator And Man-lift: Permanent And Shaft Type	$50.22	7A	3C	8P
Pierce	Power Equipment Operators	Finishing Machine, Bidwell And Gamaco & Similar Equipment	$53.00	7A	3C	8P
Pierce	Power Equipment Operators	Forklift: 3000 Lbs And Over With Attachments	$52.58	7A	3C	8P
Pierce	Power Equipment Operators	Forklifts: Under 3000 Lbs. With Attachments	$50.22	7A	3C	8P
Pierce	Power Equipment Operators	Grade Engineer: Using Blueprints, Cut Sheets,etc.	$53.00	7A	3C	8P
Pierce	Power Equipment Operators	Gradechecker/stakeman	$50.22	7A	3C	8P
Pierce	Power Equipment Operators	Guardrail Punch	$53.00	7A	3C	8P
Pierce	Power Equipment Operators	Hard Tail End Dump Articulating Off- Road Equipment 45 Yards. & Over	$53.49	7A	3C	8P
Pierce	Power Equipment Operators	Hard Tail End Dump Articulating Off-road Equipment Under 45 Yards	$53.00	7A	3C	8P
Pierce	Power Equipment Operators	Horizontal/directional Drill Locator	$52.58	7A	3C	8P
Pierce	Power Equipment Operators	Horizontal/directional Drill Operator	$53.00	7A	3C	8P
Pierce	Power Equipment Operators	Hydralifts/Boom Trucks Over 10 Tons	$52.58	7A	3C	8P

Pierce	Power Equipment Operators	Hydralifts/boom Trucks, 10 Tons And Under	$50.22	7A	3C	8P
Pierce	Power Equipment Operators	Loader, Overhead 8 Yards. & Over	$54.04	7A	3C	8P
Pierce	Power Equipment Operators	Loader, Overhead, 6 Yards. But Not Including 8 Yards	$53.49	7A	3C	8P
Pierce	Power Equipment Operators	Loaders, Overhead Under 6 Yards	$53.00	7A	3C	8P
Pierce	Power Equipment Operators	Loaders, Plant Feed	$53.00	7A	3C	8P
Pierce	Power Equipment Operators	Loaders: Elevating Type Belt	$52.58	7A	3C	8P
Pierce	Power Equipment Operators	Locomotives, All	$53.00	7A	3C	8P
Pierce	Power Equipment Operators	Material Transfer Device	$53.00	7A	3C	8P
Pierce	Power Equipment Operators	Mechanics, All (Leadmen - $0.50 Per Hour Over Mechanic)	$54.04	7A	3C	8P
Pierce	Power Equipment Operators	Motor Patrol Grader - Non-finishing	$52.58	7A	3C	8P
Pierce	Power Equipment Operators	Motor Patrol Graders, Finishing	$53.49	7A	3C	8P
Pierce	Power Equipment Operators	Mucking Machine, Mole, Tunnel Drill, Boring, Road Header And/or Shield	$53.49	7A	3C	8P
Pierce	Power Equipment Operators	Oil Distributors, Blower Distribution & Mulch Seeding Operator	$50.22	7A	3C	8P
Pierce	Power Equipment Operators	Outside Hoists (elevators And Manlifts), Air Tuggers,strato	$52.58	7A	3C	8P
Pierce	Power Equipment Operators	Overhead, Bridge Type Crane: 20 Tons Through 44 Tons	$53.00	7A	3C	8P
Pierce	Power Equipment Operators	Overhead, Bridge Type: 100 Tons And Over	$54.04	7A	3C	8P
Pierce	Power Equipment Operators	Overhead, Bridge Type: 45 Tons Through 99 Tons	$53.49	7A	3C	8P
Pierce	Power Equipment Operators	Pavement Breaker	$50.22	7A	3C	8P
Pierce	Power Equipment Operators	Pile Driver (other Than Crane Mount)	$53.00	7A	3C	8P
Pierce	Power Equipment Operators	Plant Oiler - Asphalt, Crusher	$52.58	7A	3C	8P
Pierce	Power Equipment Operators	Posthole Digger, Mechanical	$50.22	7A	3C	8P
Pierce	Power Equipment Operators	Power Plant	$50.22	7A	3C	8P
Pierce	Power Equipment Operators	Pumps - Water	$50.22	7A	3C	8P
Pierce	Power Equipment Operators	Quad 9, HD 41, D10 And Over	$53.49	7A	3C	8P
Pierce	Power Equipment Operators	Quick Tower - No Cab, Under 100 Feet In Height Based To Boom	$50.22	7A	3C	8P
Pierce	Power Equipment Operators	Remote Control Operator On Rubber Tired Earth Moving Equipment	$53.49	7A	3C	8P
Pierce	Power Equipment Operators	Rigger And Bellman	$50.22	7A	3C	8P
Pierce	Power Equipment Operators	Rollagon	$53.49	7A	3C	8P
Pierce	Power Equipment Operators	Roller, Other Than Plant Mix	$50.22	7A	3C	8P
Pierce	Power Equipment Operators	Roller, Plant Mix Or Multi-lift Materials	$52.58	7A	3C	8P
Pierce	Power Equipment Operators	Roto-mill, Roto-grinder	$53.00	7A	3C	8P
Pierce	Power Equipment Operators	Saws - Concrete	$52.58	7A	3C	8P
Pierce	Power Equipment Operators	Scraper, Self Propelled Under 45 Yards	$53.00	7A	3C	8P

Pierce	Power Equipment Operators	Scrapers - Concrete & Carry All	$52.58	7A	3C	8P
Pierce	Power Equipment Operators	Scrapers, Self-propelled: 45 Yards And Over	$53.49	7A	3C	8P
Pierce	Power Equipment Operators	Service Engineers - Equipment	$52.58	7A	3C	8P
Pierce	Power Equipment Operators	Shotcrete/gunite Equipment	$50.22	7A	3C	8P
Pierce	Power Equipment Operators	Shovel , Excavator, Backhoe, Tractors Under 15 Metric Tons.	$52.58	7A	3C	8P
Pierce	Power Equipment Operators	Shovel, Excavator, Backhoe: Over 30 Metric Tons To 50 Metric Tons	$53.49	7A	3C	8P
Pierce	Power Equipment Operators	Shovel, Excavator, Backhoes, Tractors: 15 To 30 Metric Tons	$53.00	7A	3C	8P
Pierce	Power Equipment Operators	Shovel, Excavator, Backhoes: Over 50 Metric Tons To 90 Metric Tons	$54.04	7A	3C	8P
Pierce	Power Equipment Operators	Shovel, Excavator, Backhoes: Over 90 Metric Tons	$54.61	7A	3C	8P
Pierce	Power Equipment Operators	Slipform Pavers	$53.49	7A	3C	8P
Pierce	Power Equipment Operators	Spreader, Topsider & Screedman	$53.49	7A	3C	8P
Pierce	Power Equipment Operators	Subgrader Trimmer	$53.00	7A	3C	8P
Pierce	Power Equipment Operators	Tower Bucket Elevators	$52.58	7A	3C	8P
Pierce	Power Equipment Operators	Tower Crane Over 175'in Height, Base To Boom	$54.61	7A	3C	8P
Pierce	Power Equipment Operators	Tower Crane Up: To 175' In Height, Base To Boom	$54.04	7A	3C	8P
Pierce	Power Equipment Operators	Transporters, All Track Or Truck Type	$53.49	7A	3C	8P
Pierce	Power Equipment Operators	Trenching Machines	$52.58	7A	3C	8P
Pierce	Power Equipment Operators	Truck Crane Oiler/driver - 100 Tons And Over	$53.00	7A	3C	8P
Pierce	Power Equipment Operators	Truck Crane Oiler/driver Under 100 Tons	$52.58	7A	3C	8P
Pierce	Power Equipment Operators	Truck Mount Portable Conveyor	$53.00	7A	3C	8P
Pierce	Power Equipment Operators	Welder	$53.49	7A	3C	8P
Pierce	Power Equipment Operators	Wheel Tractors, Farmall Type	$50.22	7A	3C	8P
Pierce	Power Equipment Operators	Yo Yo Pay Dozer	$53.00	7A	3C	8P
Pierce	Power Equipment Operators-Underground Sewer & Water	Asphalt Plant Operator	$53.49	7A	3C	8P
Pierce	Power Equipment Operators-Underground Sewer & Water	Assistant Engineers	$50.22	7A	3C	8P
Pierce	Power Equipment Operators-Underground Sewer & Water	Barrier Machine (zipper)	$53.00	7A	3C	8P
Pierce	Power Equipment Operators-Underground Sewer & Water	Batch Plant Operator: Concrete	$53.00	7A	3C	8P
Pierce	Power Equipment Operators-Underground Sewer & Water	Bobcat	$50.22	7A	3C	8P
Pierce	Power Equipment Operators-Underground Sewer & Water	Brokk - Remote Demolition Equipment	$50.22	7A	3C	8P
Pierce	Power Equipment Operators-Underground Sewer & Water	Brooms	$50.22	7A	3C	8P
Pierce	Power Equipment Operators-Underground Sewer & Water	Bump Cutter	$53.00	7A	3C	8P

Pierce	Power Equipment Operators-Underground Sewer & Water	Cableways	$53.49	7A	3C	8P
Pierce	Power Equipment Operators-Underground Sewer & Water	Chipper	$53.00	7A	3C	8P
Pierce	Power Equipment Operators-Underground Sewer & Water	Compressor	$50.22	7A	3C	8P
Pierce	Power Equipment Operators-Underground Sewer & Water	Concrete Pump: Truck Mount With Boom Attachment Over 42m	$53.49	7A	3C	8P
Pierce	Power Equipment Operators-Underground Sewer & Water	Concrete Finish Machine -laser Screed	$50.22	7A	3C	8P
Pierce	Power Equipment Operators-Underground Sewer & Water	Concrete Pump - Mounted Or Trailer High Pressure Line Pump, Pump High Pressure	$52.58	7A	3C	8P
Pierce	Power Equipment Operators-Underground Sewer & Water	Concrete Pump: Truck Mount With Boom Attachment Up To 42m	$53.00	7A	3C	8P
Pierce	Power Equipment Operators-Underground Sewer & Water	Conveyors	$52.58	7A	3C	8P
Pierce	Power Equipment Operators-Underground Sewer & Water	Cranes, 100 Tons - 199 Tons, Or 150 Ft Of Boom (including Jib With Attachments)	$54.04	7A	3C	8P
Pierce	Power Equipment Operators-Underground Sewer & Water	Cranes, 200 Tons To 300 Tons, Or 250 Ft Of Boom (including Jib With Attachments)	$54.61	7A	3C	8P
Pierce	Power Equipment Operators-Underground Sewer & Water	Cranes: 20 Tons Through 44 Tons With Attachments	$53.00	7A	3C	8P
Pierce	Power Equipment Operators-Underground Sewer & Water	Cranes: 45 Tons Through 99 Tons, Under 150' Of Boom (including Jib With Attachments)	$53.49	7A	3C	8P
Pierce	Power Equipment Operators-Underground Sewer & Water	Cranes: A-frame - 10 Tons And Under	$50.22	7A	3C	8P
Pierce	Power Equipment Operators-Underground Sewer & Water	Cranes: Friction 100 Tons Through 199 Tons	$54.61	7A	3C	8P
Pierce	Power Equipment Operators-Underground Sewer & Water	Cranes: Friction Over 200 Tons	$55.17	7A	3C	8P
Pierce	Power Equipment Operators-Underground Sewer & Water	Cranes: Over 300 Tons, Or 300' Of Boom (Including Jib With Attachments)	$55.17	7A	3C	8P
Pierce	Power Equipment Operators-Underground Sewer & Water	Cranes: Through 19 Tons With Attachments A-frame Over 10 Tons	$52.58	7A	3C	8P
Pierce	Power Equipment Operators-Underground Sewer & Water	Crusher	$53.00	7A	3C	8P
Pierce	Power Equipment Operators-Underground Sewer & Water	Deck Engineer/deck Winches (power)	$53.00	7A	3C	8P
Pierce	Power Equipment Operators-Underground Sewer & Water	Derricks, On Building Work	$53.49	7A	3C	8P
Pierce	Power Equipment Operators-Underground Sewer & Water	Dozers D-9 & Under	$52.58	7A	3C	8P
Pierce	Power Equipment Operators-Underground Sewer & Water	Drill Oilers: Auger Type, Truck Or Crane Mount	$52.58	7A	3C	8P
Pierce	Power Equipment Operators-Underground Sewer & Water	Drilling Machine	$53.00	7A	3C	8P
Pierce	Power Equipment Operators-Underground Sewer & Water	Elevator And Man-lift: Permanent And Shaft Type	$50.22	7A	3C	8P

Pierce	Power Equipment Operators-Underground Sewer & Water	Finishing Machine, Bidwell And Gamaco & Similar Equipment	$53.00	7A	3C	8P
Pierce	Power Equipment Operators-Underground Sewer & Water	Forklift: 3000 Lbs And Over With Attachments	$52.58	7A	3C	8P
Pierce	Power Equipment Operators-Underground Sewer & Water	Forklifts: Under 3000 Lbs. With Attachments	$50.22	7A	3C	8P
Pierce	Power Equipment Operators-Underground Sewer & Water	Grade Engineer: Using Blueprints, Cut Sheets,etc.	$53.00	7A	3C	8P
Pierce	Power Equipment Operators-Underground Sewer & Water	Gradechecker/stakeman	$50.22	7A	3C	8P
Pierce	Power Equipment Operators-Underground Sewer & Water	Guardrail Punch	$53.00	7A	3C	8P
Pierce	Power Equipment Operators-Underground Sewer & Water	Hard Tail End Dump Articulating Off- Road Equipment 45 Yards. & Over	$53.49	7A	3C	8P
Pierce	Power Equipment Operators-Underground Sewer & Water	Hard Tail End Dump Articulating Off-road Equipment Under 45 Yards	$53.00	7A	3C	8P
Pierce	Power Equipment Operators-Underground Sewer & Water	Horizontal/directional Drill Locator	$52.58	7A	3C	8P
Pierce	Power Equipment Operators-Underground Sewer & Water	Horizontal/directional Drill Operator	$53.00	7A	3C	8P
Pierce	Power Equipment Operators-Underground Sewer & Water	Hydralifts/Boom Trucks Over 10 Tons	$52.58	7A	3C	8P
Pierce	Power Equipment Operators-Underground Sewer & Water	Hydralifts/boom Trucks, 10 Tons And Under	$50.22	7A	3C	8P
Pierce	Power Equipment Operators-Underground Sewer & Water	Loader, Overhead 8 Yards. & Over	$54.04	7A	3C	8P
Pierce	Power Equipment Operators-Underground Sewer & Water	Loader, Overhead, 6 Yards. But Not Including 8 Yards	$53.49	7A	3C	8P
Pierce	Power Equipment Operators-Underground Sewer & Water	Loaders, Overhead Under 6 Yards	$53.00	7A	3C	8P
Pierce	Power Equipment Operators-Underground Sewer & Water	Loaders, Plant Feed	$53.00	7A	3C	8P
Pierce	Power Equipment Operators-Underground Sewer & Water	Loaders: Elevating Type Belt	$52.58	7A	3C	8P
Pierce	Power Equipment Operators-Underground Sewer & Water	Locomotives, All	$53.00	7A	3C	8P
Pierce	Power Equipment Operators-Underground Sewer & Water	Material Transfer Device	$53.00	7A	3C	8P
Pierce	Power Equipment Operators-Underground Sewer & Water	Mechanics, All (Leadmen - $0.50 Per Hour Over Mechanic)	$54.04	7A	3C	8P
Pierce	Power Equipment Operators-Underground Sewer & Water	Motor Patrol Grader - Non-finishing	$52.58	7A	3C	8P
Pierce	Power Equipment Operators-Underground Sewer & Water	Motor Patrol Graders, Finishing	$53.49	7A	3C	8P
Pierce	Power Equipment Operators-Underground Sewer & Water	Mucking Machine, Mole, Tunnel Drill, Boring, Road Header And/or Shield	$53.49	7A	3C	8P
Pierce	Power Equipment Operators-Underground Sewer & Water	Oil Distributors, Blower Distribution & Mulch Seeding Operator	$50.22	7A	3C	8P
Pierce	Power Equipment Operators-	Outside Hoists (elevators And	$52.58	7A	3C	8P

	Underground Sewer & Water	Manlifts), Air Tuggers,strato				
Pierce	Power Equipment Operators-Underground Sewer & Water	Overhead, Bridge Type Crane: 20 Tons Through 44 Tons	$53.00	7A	3C	8P
Pierce	Power Equipment Operators-Underground Sewer & Water	Overhead, Bridge Type: 100 Tons And Over	$54.04	7A	3C	8P
Pierce	Power Equipment Operators-Underground Sewer & Water	Overhead, Bridge Type: 45 Tons Through 99 Tons	$53.49	7A	3C	8P
Pierce	Power Equipment Operators-Underground Sewer & Water	Pavement Breaker	$50.22	7A	3C	8P
Pierce	Power Equipment Operators-Underground Sewer & Water	Pile Driver (other Than Crane Mount)	$53.00	7A	3C	8P
Pierce	Power Equipment Operators-Underground Sewer & Water	Plant Oiler - Asphalt, Crusher	$52.58	7A	3C	8P
Pierce	Power Equipment Operators-Underground Sewer & Water	Posthole Digger, Mechanical	$50.22	7A	3C	8P
Pierce	Power Equipment Operators-Underground Sewer & Water	Power Plant	$50.22	7A	3C	8P
Pierce	Power Equipment Operators-Underground Sewer & Water	Pumps - Water	$50.22	7A	3C	8P
Pierce	Power Equipment Operators-Underground Sewer & Water	Quad 9, HD 41, D10 And Over	$53.49	7A	3C	8P
Pierce	Power Equipment Operators-Underground Sewer & Water	Quick Tower - No Cab, Under 100 Feet In Height Based To Boom	$50.22	7A	3C	8P
Pierce	Power Equipment Operators-Underground Sewer & Water	Remote Control Operator On Rubber Tired Earth Moving Equipment	$53.49	7A	3C	8P
Pierce	Power Equipment Operators-Underground Sewer & Water	Rigger And Bellman	$50.22	7A	3C	8P
Pierce	Power Equipment Operators-Underground Sewer & Water	Rollagon	$53.49	7A	3C	8P
Pierce	Power Equipment Operators-Underground Sewer & Water	Roller, Other Than Plant Mix	$50.22	7A	3C	8P
Pierce	Power Equipment Operators-Underground Sewer & Water	Roller, Plant Mix Or Multi-lift Materials	$52.58	7A	3C	8P
Pierce	Power Equipment Operators-Underground Sewer & Water	Roto-mill, Roto-grinder	$53.00	7A	3C	8P
Pierce	Power Equipment Operators-Underground Sewer & Water	Saws - Concrete	$52.58	7A	3C	8P
Pierce	Power Equipment Operators-Underground Sewer & Water	Scraper, Self Propelled Under 45 Yards	$53.00	7A	3C	8P
Pierce	Power Equipment Operators-Underground Sewer & Water	Scrapers - Concrete & Carry All	$52.58	7A	3C	8P
Pierce	Power Equipment Operators-Underground Sewer & Water	Scrapers, Self-propelled: 45 Yards And Over	$53.49	7A	3C	8P
Pierce	Power Equipment Operators-Underground Sewer & Water	Service Engineers - Equipment	$52.58	7A	3C	8P
Pierce	Power Equipment Operators-Underground Sewer & Water	Shotcrete/gunite Equipment	$50.22	7A	3C	8P
Pierce	Power Equipment Operators-Underground Sewer & Water	Shovel , Excavator, Backhoe, Tractors Under 15 Metric Tons.	$52.58	7A	3C	8P
Pierce	Power Equipment Operators-Underground Sewer & Water	Shovel, Excavator, Backhoe: Over 30 Metric Tons To 50 Metric Tons	$53.49	7A	3C	8P
Pierce	Power Equipment Operators-	Shovel, Excavator, Backhoes,	$53.00	7A	3C	8P

	Underground Sewer & Water	Tractors: 15 To 30 Metric Tons				
Pierce	Power Equipment Operators-Underground Sewer & Water	Shovel, Excavator, Backhoes: Over 50 Metric Tons To 90 Metric Tons	$54.04	7A	3C	8P
Pierce	Power Equipment Operators-Underground Sewer & Water	Shovel, Excavator, Backhoes: Over 90 Metric Tons	$54.61	7A	3C	8P
Pierce	Power Equipment Operators-Underground Sewer & Water	Slipform Pavers	$53.49	7A	3C	8P
Pierce	Power Equipment Operators-Underground Sewer & Water	Spreader, Topsider & Screedman	$53.49	7A	3C	8P
Pierce	Power Equipment Operators-Underground Sewer & Water	Subgrader Trimmer	$53.00	7A	3C	8P
Pierce	Power Equipment Operators-Underground Sewer & Water	Tower Bucket Elevators	$52.58	7A	3C	8P
Pierce	Power Equipment Operators-Underground Sewer & Water	Tower Crane Over 175'in Height, Base To Boom	$54.61	7A	3C	8P
Pierce	Power Equipment Operators-Underground Sewer & Water	Tower Crane: Up To 175' In Height, Base To Boom	$54.04	7A	3C	8P
Pierce	Power Equipment Operators-Underground Sewer & Water	Transporters, All Track Or Truck Type	$53.49	7A	3C	8P
Pierce	Power Equipment Operators-Underground Sewer & Water	Trenching Machines	$52.58	7A	3C	8P
Pierce	Power Equipment Operators-Underground Sewer & Water	Truck Crane Oiler/driver - 100 Tons And Over	$53.00	7A	3C	8P
Pierce	Power Equipment Operators-Underground Sewer & Water	Truck Crane Oiler/driver Under 100 Tons	$52.58	7A	3C	8P
Pierce	Power Equipment Operators-Underground Sewer & Water	Truck Mount Portable Conveyor	$53.00	7A	3C	8P
Pierce	Power Equipment Operators-Underground Sewer & Water	Welder	$53.49	7A	3C	8P
Pierce	Power Equipment Operators-Underground Sewer & Water	Wheel Tractors, Farmall Type	$50.22	7A	3C	8P
Pierce	Power Equipment Operators-Underground Sewer & Water	Yo Yo Pay Dozer	$53.00	7A	3C	8P
Pierce	Power Line Clearance Tree Trimmers	Journey Level In Charge	$44.86	5A	4A	
Pierce	Power Line Clearance Tree Trimmers	Spray Person	$42.58	5A	4A	
Pierce	Power Line Clearance Tree Trimmers	Tree Equipment Operator	$44.86	5A	4A	
Pierce	Power Line Clearance Tree Trimmers	Tree Trimmer	$40.08	5A	4A	
Pierce	Power Line Clearance Tree Trimmers	Tree Trimmer Groundperson	$30.20	5A	4A	
Pierce	Refrigeration & Air Conditioning Mechanics	Mechanic	$63.76	5A	1G	
Pierce	Residential Brick Mason	Journey Level	$23.77		1	
Pierce	Residential Carpenters	Journey Level	$39.62	5D	1M	
Pierce	Residential Cement Masons	Journey Level	$51.18	7A	1M	
Pierce	Residential Drywall Applicators	Journey Level	$39.62	5D	1M	
Pierce	Residential Drywall Tapers	Journey Level	$50.87	5P	1E	
Pierce	Residential Electricians	JOURNEY LEVEL	$29.29		1	

Pierce	Residential Glaziers	Journey Level	$36.20	7L	1H	
Pierce	Residential Insulation Applicators	Journey Level	$18.70		1	
Pierce	Residential Laborers	Journey Level	$20.99		1	
Pierce	Residential Marble Setters	Journey Level	$22.67		1	
Pierce	Residential Painters	Journey Level	$26.13		1	
Pierce	Residential Plumbers & Pipefitters	Journey Level	$43.92	5A	1G	
Pierce	Residential Refrigeration & Air Conditioning Mechanics	Journey Level	$36.92	5A	1G	
Pierce	Residential Sheet Metal Workers	Journey Level (Field or Shop)	$41.84	7F	1R	
Pierce	Residential Soft Floor Layers	Journey Level	$41.99	7E	1B	
Pierce	Residential Sprinkler Fitters (Fire Protection)	Journey Level	$42.48	5C	2R	
Pierce	Residential Stone Masons	Journey Level	$22.67		1	
Pierce	Residential Terrazzo Workers	Journey Level	$9.32		1	
Pierce	Residential Terrazzo/Tile Finishers	Journey Level	$19.32		1	
Pierce	Residential Tile Setters	Journey Level	$9.32		1	
Pierce	Roofers	Journey Level	$44.36	5A	2O	
Pierce	Roofers	Using Irritable Bituminous Materials	$47.36	5A	2O	
Pierce	Sheet Metal Workers	Journey Level (Field or Shop)	$69.37	7F	1E	
Pierce	Shipbuilding & Ship Repair	Boilermaker	$40.12	7M	1H	
Pierce	Shipbuilding & Ship Repair	Carpenter	$33.71	6E	1B	
Pierce	Shipbuilding & Ship Repair	Electrician	$33.71	6E	1B	
Pierce	Shipbuilding & Ship Repair	Heat & Frost Insulator	$58.93	5J	1S	
Pierce	Shipbuilding & Ship Repair	Laborer	$19.10		1	
Pierce	Shipbuilding & Ship Repair	Machinist	$33.71	6E	1B	
Pierce	Shipbuilding & Ship Repair	Operator	$33.71	6E	1B	
Pierce	Shipbuilding & Ship Repair	Painter	$38.74	6A	1R	
Pierce	Shipbuilding & Ship Repair	Pipefitter	$33.71	6E	1B	
Pierce	Shipbuilding & Ship Repair	Rigger	$15.77		1	
Pierce	Shipbuilding & Ship Repair	Sandblaster	$38.74	6A	1R	
Pierce	Shipbuilding & Ship Repair	SHEET METAL	$35.83		1	
Pierce	Shipbuilding & Ship Repair	Shipfitter	$33.71	6E	1B	
Pierce	Shipbuilding & Ship Repair	Trucker	$15.75		1	
Pierce	Shipbuilding & Ship Repair	Warehouse	$13.75		1	
Pierce	Shipbuilding & Ship Repair	Welder/burner	$33.71	6E	1B	
Pierce	Sign Makers & Installers (Electrical)	Sign Installer	$26.17		1	
Pierce	Sign Makers & Installers (Electrical)	Sign Maker	$20.33		1	
Pierce	Sign Makers & Installers (Non-Electrical)	Sign Installer	$33.43		1	
Pierce	Sign Makers & Installers (Non-Electrical)	Sign Maker	$22.79		1	
Pierce	Soft Floor Layers	Journey Level	$42.15	5A	3D	
Pierce	Solar Controls For Windows	Journey Level	$10.31		1	

Pierce	Sprinkler Fitters (Fire Protection)	Journey Level	$69.59	5C	1X	
Pierce	Stage Rigging Mechanics (Non Structural)	Journey Level	$13.23		1	
Pierce	Stone Masons	Journey Level	$50.12	5A	1M	
Pierce	Street And Parking Lot Sweeper Workers	Journey Level	$12.06		1	
Pierce	Surveyors	All Classifications	$35.68	Null	1	
Pierce	Telecommunication Technicians	Journey Level	$28.29		1	
Pierce	Telephone Line Construction - Outside	Cable Splicer	$36.01	5A	2B	
Pierce	Telephone Line Construction - Outside	Hole Digger/Ground Person	$20.05	5A	2B	
Pierce	Telephone Line Construction - Outside	Installer (Repairer)	$34.50	5A	2B	
Pierce	Telephone Line Construction - Outside	Special Aparatus Installer I	$36.01	5A	2B	
Pierce	Telephone Line Construction - Outside	Special Apparatus Installer II	$35.27	5A	2B	
Pierce	Telephone Line Construction - Outside	Telephone Equipment Operator (Heavy)	$36.01	5A	2B	
Pierce	Telephone Line Construction - Outside	Telephone Equipment Operator (Light)	$33.47	5A	2B	
Pierce	Telephone Line Construction - Outside	Telephone Lineperson	$33.47	5A	2B	
Pierce	Telephone Line Construction - Outside	Television Groundperson	$19.04	5A	2B	
Pierce	Telephone Line Construction - Outside	Television Lineperson/Installer	$25.27	5A	2B	
Pierce	Telephone Line Construction - Outside	Television System Technician	$30.20	5A	2B	
Pierce	Telephone Line Construction - Outside	Television Technician	$27.09	5A	2B	
Pierce	Telephone Line Construction - Outside	Tree Trimmer	$33.47	5A	2B	
Pierce	Terrazzo Workers	Journey Level	$46.96	5A	1M	
Pierce	Tile Setters	Journey Level	$46.96	5A	1M	
Pierce	Tile, Marble & Terrazzo Finishers	Journey Level	$20.74		1	
Pierce	Traffic Control Stripers	Journey Level	$42.33	7A	1K	
Pierce	Truck Drivers	Asphalt Mix	$22.49		1	
Pierce	Truck Drivers	Dump Truck	$22.56		1	
Pierce	Truck Drivers	Dump Truck And Trailer	$22.56		1	
Pierce	Truck Drivers	Other Trucks	$30.20		1	
Pierce	Truck Drivers	Transit Mixer	$33.17	6I	2H	
Pierce	Well Drillers & Irrigation Pump Installers	Irrigation Pump Installer	$16.09		1	
Pierce	Well Drillers & Irrigation Pump Installers	Oiler	$15.39		1	
Pierce	Well Drillers & Irrigation Pump Installers	Well Driller	$18.30		1	

****

Overtime Codes

Overtime calculations are based on the hourly rate actually paid to the worker. On public works projects, the hourly rate must be not less than the prevailing rate of wage minus the hourly rate of the cost of fringe benefits actually provided for the worker.

1. ALL HOURS WORKED IN EXCESS OF EIGHT (8) HOURS PER DAY OR FORTY (40) HOURS PER WEEK SHALL BE PAID AT ONE AND ONE-HALF TIMES THE HOURLY RATE OF WAGE.

B. All hours worked on Saturdays shall be paid at one and one-half times the hourly rate of wage. All hours worked on Sundays and holidays shall be paid at double the hourly rate of wage.

C. The first two (2) hours after eight (8) regular hours Monday through Friday and the first ten (10) hours on Saturday shall be paid at one and one-half times the hourly rate of wage. All other overtime hours and all hours worked on Sundays and holidays shall be paid at double the hourly rate of wage.

D. The first two (2) hours before or after a five-eight (8) hour workweek day or a four-ten (10) hour workweek day and the first eight (8) hours worked the next day after either workweek shall be paid at one and one-half times the hourly rate of wage. All additional hours worked and all worked on Sundays and holidays shall be paid at double the hourly rate of wage.

E. The first two (2) hours after eight (8) regular hours Monday through Friday and the first eight (8) hours on Saturday shall be paid at one and one-half times the hourly rate of wage. All other hours worked Monday through Saturday, and all hours worked on Sundays and holidays shall be paid at double the hourly rate of wage.

F. The first two (2) hours after eight (8) regular hours Monday through Friday and the first ten (10) hours on Saturday shall be paid at one and one-half times the hourly rate of wage. All other overtime hours worked, except Labor Day, shall be paid at double the hourly rate of wage. All hours worked on Labor Day shall be paid at three times the hourly rate of wage.

G. The first ten (10) hours worked on Saturdays and the first ten (10) hours worked on a fifth calendar weekday in a four-ten hour schedule, shall be paid at one and one-half times the hourly rate of wage. All hours worked in excess of ten (10) hours per day Monday through Saturday and all hours worked on Sundays and holidays shall be paid at double the hourly rate of wage.

H. All hours worked on Saturdays (except makeup days if work is lost due to inclement weather conditions or equipment breakdown) shall be paid at one and one-half times the hourly rate of wage. All hours worked Monday through Saturday over twelve (12) hours and all hours worked on Sundays and holidays shall be paid at double the hourly rate of wage.

I. All hours worked on Sundays and holidays shall also be paid at double the hourly rate of wage.

J. The first two (2) hours after eight (8) regular hours Monday through Friday and the first ten (10) hours on Saturday shall be paid at one and one-half times the hourly rate of wage. All hours worked over ten (10) hours Monday through Saturday, Sundays and holidays shall be paid at double the hourly rate of wage.

K. All hours worked on Saturdays and Sundays shall be paid at one and one-half times the hourly rate of wage. All hours worked on holidays shall be paid at double the hourly rate of wage.

M. All hours worked on Saturdays (except makeup days if work is lost due to inclement weather conditions) shall be paid at one and one-half times the hourly rate of wage. All hours worked on Sundays and holidays shall be paid at double the hourly rate of wage.

1. N. All hours worked on Saturdays (except makeup days) shall be paid at one and one-half times the hourly rate of wage. All hours worked on Sundays and holidays shall be paid at double the hourly rate of wage.

O. The first ten (10) hours worked on Saturday shall be paid at one and one-half times the hourly rate of wage. All hours worked on Sundays, holidays and after twelve (12) hours, Monday through Friday and after ten (10) hours on Saturday shall be paid at double the hourly rate of wage.

P. All hours worked on Saturdays (except makeup days if circumstances warrant) and Sundays shall be paid at one and one-half times the hourly rate of wage. All hours worked on holidays shall be paid at double the hourly rate of wage.

Q. The first two (2) hours after eight (8) regular hours Monday through Friday and up to ten (10) hours worked on Saturdays shall be paid at one and one-half times the hourly rate of wage. All hours worked in excess of ten (10) hours per day Monday through Saturday and all hours worked on Sundays and holidays (except Christmas day) shall be paid at double the hourly rate of wage. All hours worked on Christmas day shall be paid at two and one-half times the hourly rate of wage.

R. All hours worked on Sundays and holidays shall be paid at two times the hourly rate of wage.

S. The first two (2) hours after eight (8) regular hours Monday through Friday and the first eight (8) hours on Saturday shall be paid at one and one-half times the hourly rate of wage. All hours worked on holidays and all other overtime hours worked, except Labor Day, shall be paid at double the hourly rate of wage. All hours worked on Labor Day shall be paid at three times the hourly rate of wage.

U. All hours worked on Saturdays shall be paid at one and one-half times the hourly rate of wage. All hours worked on Sundays and holidays (except Labor Day) shall be paid at two times the hourly rate of wage. All hours worked on Labor Day shall be paid at three times the hourly rate of wage.

V. All hours worked on Sundays and holidays (except Thanksgiving Day and Christmas day) shall be paid at one and one-half times the hourly rate of wage. All hours worked on Thanksgiving Day and Christmas day shall be paid at double the hourly rate of wage.

W. All hours worked on Saturdays and Sundays (except make-up days due to conditions beyond the control of the employer)) shall be paid at one and one-half times the hourly rate of wage. All hours worked on holidays shall be paid at double the hourly rate of wage.

X. The first four (4) hours after eight (8) regular hours Monday through Friday and the first twelve (12) hours on Saturday shall be paid at one and one-half times the hourly rate of wage. All hours worked over twelve (12) hours Monday through Saturday, Sundays and holidays shall be paid at double the hourly rate of wage. When holiday falls on Saturday or Sunday, the day before Saturday, Friday, and the day after Sunday, Monday, shall be considered the holiday and all work performed shall be paid at double the hourly rate of wage.

Y. All hours worked outside the hours of 5:00 am and 5:00 pm (or such other hours as may be agreed upon by any employer and the employee) and all hours worked in excess of eight (8) hours per day (10 hours per day for a 4 x 10 workweek) and on Saturdays and holidays (except labor day) shall be paid at one and one-half times the hourly rate of wage. (except for employees who are absent from work without prior approval on a scheduled workday during the workweek shall be paid at the straight-time rate until they have worked 8 hours in a day (10 in a 4 x 10 workweek) or 40 hours during that workweek.) All hours worked Monday through Saturday over twelve (12) hours and all hours worked on Sundays and Labor Day shall be paid at double the hourly rate of wage.

Z. All hours worked on Saturdays and Sundays shall be paid at one and one-half times the hourly rate of wage. All hours worked on holidays shall be paid the straight time rate of pay in addition to holiday pay.

2 ALL HOURS WORKED IN EXCESS OF EIGHT (8) HOURS PER DAY OR FORTY (40) HOURS PER WEEK SHALL BE PAID AT ONE AND ONE-HALF TIMES THE HOURLY RATE OF WAGE.

B. All hours worked on holidays shall be paid at one and one-half times the hourly rate of wage.

C. All hours worked on Sundays shall be paid at one and one-half times the hourly rate of wage. All hours worked on holidays shall be paid at two times the hourly rate of wage.

F. The first eight (8) hours worked on holidays shall be paid at the straight hourly rate of wage in addition to the holiday pay. All hours worked in excess of eight (8) hours on holidays shall be paid at double the hourly rate of wage.

G. All hours worked on Sunday shall be paid at two times the hourly rate of wage. All hours worked on paid holidays shall be paid at two and one-half times the hourly rate of wage including holiday pay.

H. All hours worked on Sunday shall be paid at two times the hourly rate of wage. All hours worked on holidays shall be paid at one and one-half times the hourly rate of wage.

O. All hours worked on Sundays and holidays shall be paid at one and one-half times the hourly rate of wage.

R. All hours worked on Sundays and holidays and all hours worked over sixty (60) in one week shall be paid at double the hourly rate of wage.

U. All hours worked on Saturdays shall be paid at one and one-half times the hourly rate of wage. All hours worked over 12 hours in a day or on Sundays and holidays shall be paid at double the hourly rate of wage.

W. The first two (2) hours after eight (8) regular hours Monday through Friday and the first eight (8) hours on Saturday shall be paid at one and one-half times the hourly rate of wage. All other hours worked Monday through Saturday, and all hours worked on Sundays and holidays shall be paid at double the hourly rate of wage. On a four-day, ten-hour weekly schedule, either Monday thru Thursday or Tuesday thru Friday schedule, all hours worked after ten shall be paid at double the hourly rate of wage. The first eight (8) hours worked on the fifth day shall be paid at one and one-half times the hourly rate of wage. All other hours worked on the fifth, sixth, and seventh days and on holidays shall be paid at double the hourly rate of wage.

3. ALL HOURS WORKED IN EXCESS OF EIGHT (8) HOURS PER DAY OR FORTY (40) HOURS PER WEEK SHALL BE PAID AT ONE AND ONE-HALF TIMES THE HOURLY RATE OF WAGE.

A. Work performed in excess of eight (8) hours of straight time per day, or ten (10) hours of straight time per day when four ten (10) hour shifts are established, or forty (40) hours of straight time per week, Monday through Friday, or outside the normal shift, and all work on Saturdays shall be paid at time and one-half the straight time rate. Hours worked over twelve hours (12) in a single shift and all work performed after 6:00 pm Saturday to 6:00 am Monday and holidays shall be paid at double the straight time rate of pay. Any shift starting between the hours of 6:00 pm and midnight shall receive an additional one dollar ($1.00) per hour for all hours worked that shift. The employer shall have the sole discretion to assign overtime work to employees. Primary consideration for overtime work shall be given to employees regularly assigned to the work to be performed on overtime situations. After an employee has worked eight (8) hours at an applicable overtime rate, all additional hours shall be at the applicable overtime rate until such time as the employee has had a break of eight (8) hours or more.

B. The first four (4) hours after eight (8) regular hours Monday through Friday and the first twelve (12) hours on Saturday shall be paid at one and one-half times the hourly rate of wage. All hours worked over twelve (12) hours Monday through Saturday, and all hours worked on Sundays and holidays shall be paid at double the hourly rate of wage.

3. C. Work performed in excess of eight (8) hours of straight time per day, or ten (10) hours of straight time per day when four ten (10) hour shifts are established, or forty (40) hours of straight time per week, Monday through Friday, or outside the normal shift, and all work on Saturdays shall be paid at one and one-half times the hourly rate of wage. All work performed after 6:00 pm Saturday to 5:00 am Monday and Holidays shall be paid at double the hourly rate of wage. After an employee has worked eight (8) hours at an applicable overtime rate, all additional hours shall be at the applicable overtime rate until such time as the employee has had a break of eight (8) hours or more.

D. All hours worked between the hours of 6:00 pm and 6:00 am, Monday through Saturday, shall be paid at a premium rate of 15% over the hourly rate of wage. All other hours worked after 6:00 am on Saturdays, shall be paid at one and one-half times the hourly rate of wage. All hours worked on Sundays and holidays shall be paid at double the hourly rate of wage.

E. All hours worked Sundays and holidays shall be paid at double the hourly rate of wage. Each week, once 40 hours of straight time work is achieved, then any hours worked over 10 hours per day Monday through Saturday shall be paid at double the hourly wage rate.

F. All hours worked on Saturday shall be paid at one and one-half times the hourly rate of wage. All hours worked on Sunday shall be paid at two times the hourly rate of wage. All hours worked on paid holidays shall be paid at two and one-half times the hourly rate of wage including holiday pay.

H. All work performed on Sundays between March 16th and October 14th and all Holidays shall be compensated for at two (2) times the regular rate of pay. Work performed on Sundays between October 15th and March 15th shall be compensated at one and one half (1-1/2) times the regular rate of pay.

I. All hours worked on Saturdays shall be paid at one and one-half times the hourly rate of wage. In the event the job is down due to weather conditions during a five day work week (Monday through Friday,) or a four day-ten hour work week (Tuesday through Friday,) then Saturday may be worked as a voluntary make-up day at the straight time rate. However, Saturday shall not be utilized as a make-up day when a holiday falls on Friday. All hours worked Monday through Saturday over twelve (12) hours and all hours worked on Sundays and holidays shall be paid at double the hourly rate of wage.

4. ALL HOURS WORKED IN EXCESS OF EIGHT (8) HOURS PER DAY OR FORTY (40) HOURS PER WEEK SHALL BE PAID AT ONE AND ONE-HALF TIMES THE HOURLY RATE OF WAGE.

A. All hours worked in excess of eight (8) hours per day or forty (40) hours per week shall be paid at double the hourly rate of wage. All hours worked on Saturdays, Sundays and holidays shall be paid at double the hourly rate of wage.

Holiday Codes

5. A. Holidays: New Year's Day, Memorial Day, Independence Day, Labor Day, Thanksgiving Day, Friday after Thanksgiving Day, and Christmas Day (7).

B. Holidays: New Year's Day, Memorial Day, Independence Day, Labor Day, Thanksgiving Day, Friday after Thanksgiving Day, the day before Christmas, and Christmas Day (8).

C. Holidays: New Year's Day, Presidents' Day, Memorial Day, Independence Day, Labor Day, Thanksgiving Day, the Friday after Thanksgiving Day, And Christmas Day (8).

D. Holidays: New Year's Day, Memorial Day, Independence Day, Labor Day, Thanksgiving Day, the Friday and Saturday after Thanksgiving Day, And Christmas Day (8).

5. H. Holidays: New Year's Day, Memorial Day, Independence Day, Thanksgiving Day, the Day after Thanksgiving Day, And Christmas (6).

I. Holidays: New Year's Day, Memorial Day, Independence Day, Labor Day, Thanksgiving Day, and Christmas Day (6).

J. Holidays: New Year's Day, Memorial Day, Independence Day, Thanksgiving Day, Friday after Thanksgiving Day, Christmas Eve Day, And Christmas Day (7).

K. Holidays: New Year's Day, Presidents' Day, Memorial Day, Independence Day, Labor Day, Thanksgiving Day, Friday After Thanksgiving Day, The Day Before Christmas, And Christmas Day (9).

L. Holidays: New Year's Day, Martin Luther King Jr. Day, Memorial Day, Independence Day, Labor Day, Thanksgiving Day, Friday After Thanksgiving Day, And Christmas Day (8).

N. Holidays: New Year's Day, Presidents' Day, Memorial Day, Independence Day, Labor Day, Veterans' Day, Thanksgiving Day, The Friday After Thanksgiving Day, And Christmas Day (9).

P. Holidays: New Year's Day, Memorial Day, Independence Day, Labor Day, Thanksgiving Day, Friday And Saturday After Thanksgiving Day, The Day Before Christmas, And Christmas Day (9). If A Holiday Falls On Sunday, The Following Monday Shall Be Considered As A Holiday.

Q. Paid Holidays: New Year's Day, Memorial Day, Independence Day, Labor Day, Thanksgiving Day, and Christmas Day (6).

R. Paid Holidays: New Year's Day, Memorial Day, Independence Day, Labor Day, Thanksgiving Day, Day After Thanksgiving Day, One-Half Day Before Christmas Day, And Christmas Day. (7 1/2).

S. Paid Holidays: New Year's Day, Presidents' Day, Memorial Day, Independence Day, Labor Day, Thanksgiving Day, And Christmas Day (7).

T. Paid Holidays: New Year's Day, Washington's Birthday, Memorial Day, Independence Day, Labor Day, Thanksgiving Day, The Friday After Thanksgiving Day, Christmas Day, And The Day Before Or After Christmas (9).

Z. Holidays: New Year's Day, Memorial Day, Independence Day, Labor Day, Veterans Day, Thanksgiving Day, the Friday after Thanksgiving Day, And Christmas Day (8).

Holiday Codes Continued

6. A. Paid Holidays: New Year's Day, Presidents' Day, Memorial Day, Independence Day, Labor Day, Thanksgiving Day, The Friday After Thanksgiving Day, And Christmas Day (8).

E. Paid Holidays: New Year's Day, Day Before Or After New Year's Day, Presidents Day, Memorial Day, Independence Day, Labor Day, Thanksgiving Day, Day After Thanksgiving Day, Christmas Day, And A Half-Day On Christmas Eve Day. (9 1/2).

G. Paid Holidays: New Year's Day, Martin Luther King Jr. Day, Presidents' Day, Memorial Day, Independence Day, Labor Day, Veterans' Day, Thanksgiving Day, The Friday After Thanksgiving Day, Christmas Day, And Christmas Eve Day (11).

H. Paid Holidays: New Year's Day, New Year's Eve Day, Memorial Day, Independence Day, Labor Day, Thanksgiving Day, Friday After Thanksgiving Day, Christmas Day, The Day After Christmas, And A Floating Holiday (10).

6. I. Paid Holidays: New Year's Day, Memorial Day, Independence Day, Labor Day, Thanksgiving Day, Friday After Thanksgiving Day, And Christmas Day (7).

T. Paid Holidays: New Year's Day, Presidents' Day, Memorial Day, Independence Day, Labor Day, Thanksgiving Day, The Friday After Thanksgiving Day, The Last Working Day Before Christmas Day, And Christmas Day (9).

Z. Holidays: New Year's Day, Memorial Day, Independence Day, Labor Day, Thanksgiving Day, Friday after Thanksgiving Day, And Christmas Day (7). If a holiday falls on Saturday, the preceding Friday shall be considered as the holiday. If a holiday falls on Sunday, the following Monday shall be considered as the holiday.

Holiday Codes Continued

7. A. Holidays: New Year's Day, Memorial Day, Independence Day, Labor Day, Thanksgiving Day, The Friday And Saturday After Thanksgiving Day, And Christmas Day (8). Any Holiday Which Falls On A Sunday Shall Be Observed As A Holiday On The Following Monday. If any of the listed holidays falls on a Saturday, the preceding Friday shall be a regular work day.

B. Holidays: New Year's Day, Memorial Day, Independence Day, Labor Day, Thanksgiving Day, the Friday and Saturday after Thanksgiving Day, And Christmas Day (8). Any holiday which falls on a Sunday shall be observed as a holiday on the following Monday. Any holiday which falls on a Saturday shall be observed as a holiday on the preceding Friday.

C. Holidays: New Year's Day, Martin Luther King Jr. Day, Memorial Day, Independence Day, Labor Day, Thanksgiving Day, The Friday After Thanksgiving Day, And Christmas Day (8). Any holiday which falls on a Sunday shall be observed as a holiday on the following Monday. Any holiday which falls on a Saturday shall be observed as a holiday on the preceding Friday.

D. Paid Holidays: New Year's Day, Memorial Day, Independence Day, Labor Day, Veteran's Day, Thanksgiving Day, the Friday after Thanksgiving Day, And Christmas Day (8). Unpaid Holidays: President's Day. Any paid holiday which falls on a Sunday shall be observed as a holiday on the following Monday. Any paid holiday which falls on a Saturday shall be observed as a holiday on the preceding Friday.

E. Holidays: New Year's Day, Memorial Day, Independence Day, Labor Day, Thanksgiving Day, the Friday after Thanksgiving Day, And Christmas Day (7). Any holiday which falls on a Sunday shall be observed as a holiday on the following Monday. Any holiday which falls on a Saturday shall be observed as a holiday on the preceding Friday.

F. Holidays: New Year's Day, Memorial Day, Independence Day, Labor Day, Thanksgiving Day, the Friday after Thanksgiving Day, the last working day before Christmas day and Christmas day (8). Any holiday which falls on a Sunday shall be observed as a holiday on the following Monday. Any holiday which falls on a Saturday shall be observed as a holiday on the preceding Friday.

G. Holidays: New Year's Day, Memorial Day, Independence Day, Labor Day, Thanksgiving Day, and Christmas Day (6). Any holiday which falls on a Sunday shall be observed as a holiday on the following Monday.

H. Holidays: New Year's Day, Martin Luther King Jr. Day, Independence Day, Memorial Day, Labor Day, Thanksgiving Day, the Friday after Thanksgiving Day, the Last Working Day before Christmas Day and Christmas Day (9). Any holiday which falls on a Sunday shall be observed as a holiday on the following Monday. Any holiday which falls on a Saturday shall be observed as a holiday on the preceding Friday.

7. I. Holidays: New Year's Day, President's Day, Independence Day, Memorial Day, Labor Day, Thanksgiving Day, The Friday After Thanksgiving Day, The Day Before Christmas Day And Christmas Day (9). Any holiday which falls on a Sunday shall be observed as a holiday on the following Monday. Any holiday which falls on a Saturday shall be observed as a holiday on the preceding Friday.

J. Holidays: New Year's Day, Independence Day, Memorial Day, Labor Day, Thanksgiving Day and Christmas Day (6). Any holiday which falls on a Sunday shall be observed as a holiday on the following Monday. Any holiday which falls on a Saturday shall be observed as a holiday on the preceding Friday.

K. Holidays: New Year's Day, Memorial Day, Independence Day, Thanksgiving Day, the Friday and Saturday after Thanksgiving Day, And Christmas Day (8). Any holiday which falls on a Sunday shall be observed as a holiday on the following Monday. Any holiday which falls on a Saturday shall be observed as a holiday on the preceding Friday.

L. Holidays: New Year's Day, Memorial Day, Labor Day, Independence Day, Thanksgiving Day, the Last Work Day before Christmas Day, And Christmas Day (7). Any holiday which falls on a Sunday shall be observed as a holiday on the following Monday. Any holiday which falls on a Saturday shall be observed as a holiday on the preceding Friday.

M. Paid Holidays: New Year's Day, The Day after or before New Year's Day, President's Day, Memorial Day, Independence Day, Labor Day, Thanksgiving Day, the Friday after Thanksgiving Day, Christmas Day, And the Day after or before Christmas Day 10). Any holiday which falls on a Sunday shall be observed as a holiday on the following Monday. Any holiday which falls on a Saturday shall be observed as a holiday on the preceding Friday.

N. Holidays: New Year's Day, Memorial Day, Independence Day, Labor Day, Thanksgiving Day, the Friday after Thanksgiving Day, And Christmas Day (7). Any holiday which falls on a Sunday shall be observed as a holiday on the following Monday. When Christmas falls on a Saturday, the preceding Friday shall be observed as a holiday.

O. Paid Holidays: New Year's Day, The Day After Or Before New Year's Day, President's Day, Memorial Day, Independence Day, Labor Day, Thanksgiving Day, The Friday After Thanksgiving Day, Christmas Day, The Day After Or Before Christmas Day, And The Employees Birthday. 11). Any holiday which falls on a Sunday shall be observed as a holiday on the following Monday. Any holiday which falls on a Saturday shall be observed as a holiday on the preceding Friday.

P. Holidays: New Year's Day, Memorial Day, Independence Day, Labor Day, Thanksgiving Day, Friday after Thanksgiving Day, And Christmas Day (7). Any holiday which falls on a Sunday shall be observed as a holiday on the following Monday.

Q. Holidays: New Year's Day, Memorial Day, Independence Day, Labor Day, Thanksgiving Day, the Friday after Thanksgiving Day, the Last Working Day before Christmas Day and Christmas Day (8). Any holiday which falls on a Sunday shall be observed as a holiday on the following Monday. If any of the listed holidays falls on a Saturday, the preceding Friday shall be a regular work day.

R. Paid Holidays: New Year's Day, the day after or before New Year's Day, President's Day, Memorial Day, Independence Day, Labor Day, Thanksgiving Day, the Friday after Thanksgiving Day, Christmas Day, and the day after or before Christmas Day (10). If any of the listed holidays fall on Saturday, the preceding Friday shall be observed as the holiday. If any of the listed holidays falls on a Sunday, the day observed by the Nation shall be considered a holiday and compensated accordingly.

S. Paid Holidays: New Year's Day, Memorial Day, Independence Day, Labor Day, Thanksgiving Day, Friday After Thanksgiving Day, Christmas Day, The Day After Christmas, And A Floating Holiday (9). If any of the listed holidays falls on a Sunday, the day observed by the Nation shall be considered a holiday and compensated accordingly.

Note Codes

8. A. In addition to the hourly wage and fringe benefits, the following depth premiums apply to depths of fifty feet or more:
Over 50' To 100' -$2.00 per Foot for Each Foot Over 50 Feet
Over 100' To 150' -$3.00 per Foot for Each Foot Over 100 Feet
Over 150' To 220' -$4.00 per Foot for Each Foot Over 150 Feet
Over 220' -$5.00 per Foot for Each Foot Over 220 Feet

C. In addition to the hourly wage and fringe benefits, the following depth premiums apply to depths of fifty feet or more:
Over 50' To 100' -$1.00 per Foot for Each Foot Over 50 Feet
Over 100' To 150' -$1.50 per Foot for Each Foot Over 100 Feet
Over 150' To 200' -$2.00 per Foot for Each Foot Over 150 Feet
Over 200' -Divers May Name Their Own Price

D. Workers working with supplied air on hazmat projects receive an additional $1.00 per hour.

L. Workers on hazmat projects receive additional hourly premiums as follows -Level A: $0.75, Level B: $0.50, And Level C: $0.25.

M. Workers on hazmat projects receive additional hourly premiums as follows: Levels A & B: $1.00, Levels C & D: $0.50.

N. Workers on hazmat projects receive additional hourly premiums as follows -Level A: $1.00, Level B: $0.75, Level C: $0.50, And Level D: $0.25.

P. Workers on hazmat projects receive additional hourly premiums as follows -Class A Suit: $2.00, Class B Suit: $1.50, Class C Suit: $1.00, And Class D Suit $0.50.

Q. The highest pressure registered on the gauge for an accumulated time of more than fifteen (15) minutes during the shift shall be used in determining the scale paid.

R. Effective August 31, 2012 – A Traffic Control Supervisor shall be present on the project whenever flagging or spotting or other traffic control labor is being utilized. A Traffic Control Laborer performs the setup, maintenance and removal of all temporary traffic control devices and construction signs necessary to control vehicular, bicycle, and pedestrian traffic during construction operations. Flaggers and Spotters shall be posted where shown on approved Traffic Control Plans or where directed by the Engineer. All flaggers and spotters shall possess a current flagging card issued by the State of Washington, Oregon, Montana, or Idaho. These classifications are only effective on or after August 31, 2012.

S. Effective August 31, 2012 – A Traffic Control Supervisor shall be present on the project whenever flagging or spotting or other traffic control labor is being utilized. Flaggers and Spotters shall be posted where shown on approved Traffic Control Plans or where directed by the Engineer. All flaggers and spotters shall possess a current flagging card issued by the State of Washington, Oregon, Montana, or Idaho. This classification is only effective on or after August 31, 2012.

T. Effective August 31, 2012 – A Traffic Control Laborer performs the setup, maintenance and removal of all temporary traffic control devices and construction signs necessary to control vehicular, bicycle, and pedestrian traffic during construction operations. Flaggers and Spotters shall be posted where shown on approved Traffic Control Plans or where directed by the Engineer. All flaggers and spotters shall possess a current flagging card issued by the State of Washington, Oregon, Montana, or Idaho. This classification is only effective on or after August 31, 2012.

APPENDIX B

CONTRACT SPECIFICATIONS
FOR

PS-10 Rehabilitation / PS-5 and PS-6 Wetwell Coating

City of Fife, WA

DATE: July 2014

The technical material and data contained in these specifications were prepared under the supervision and direction of the undersigned whose seal as a professional engineer licensed to practice as such in the State of Washington is affixed below.

Bruce Gravette, P.E.
Tetra Tech, Inc., Engineering and Architecture Services

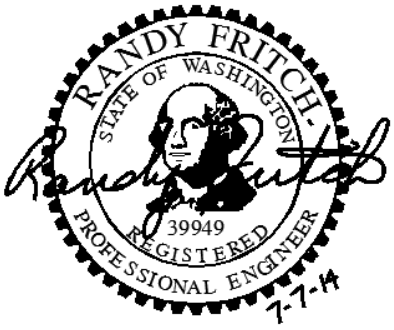

Randy Fritch, P.E.
Tetra Tech, Inc., Engineering and Architecture Services

CONTRACT SPECIFICATIONS
TABLE OF CONTENTS

DIVISION 1 – GENERAL REQUIREMENTS
01010 Summary of Work
01020 Force Account Procedures for Coating Work
01300 Submittals Procedure
01730 Operations and Maintenance Manuals

DIVISION 2 – SITEWORK
02105 Temporary Sewage Bypass
02658 Chemical Injection Grouting

DIVISION 3 – CONCRETE
03700 Concrete Repair

DIVISION 6– WOOD AND PLASTICS
06630 Fiberglass Reinforced Plastic (FRP) Ladders

DIVISION 8– DOORS AND WINDOWS
08310 Access Hatches

DIVISION 9 – FINISHES
09900 Coating Systems

DIVISION 11 –EQUIPMENT
11324 Submersible Pumps
11400 Wetwell Aeration/Mixing System

DIVISION 15 –MECHANICAL
15085 Piping Connections
15100 Miscellaneous Mechanical Equipment

DIVISION 16 – ELECTRICAL
16000 General Requirements for Electrical Work
16030 Electrical Testing
16110 Raceways, Boxes, and Supports
16120 600 Volt Conductors and Cables
16175 Miscellaneous Electrical Devices
16176 Local Control Panels
16450 Grounding System
16470 Lighting and Power Distribution Panel Boards
16500 Lighting Fixtures

DIVISION 17 – INSTRUMENTATION
17200 Magnetic Flow Meters

SECTION 01010

SUMMARY OF WORK

PART 1 GENERAL

1.01 SUMMARY

A. The work to be performed under this Contract consists of furnishing all tools, equipment, and materials to complete the work included at the three pump stations, briefly described in this section.
   1. The following descriptions are not intended to be complete. Refer to the Contract Documents for further information.

1.02 WORK OF THIS CONTRACT

A. The City intends to perform portions of the work included in this project under two separate Force Account arrangements.
   1. Force Account Procedures for Coating Work (Section 01020) applies to the following work:
      - Chemical Injection Grouting (Section 02658) for sealing leakage into the wetwells.
      - Concrete Repair (Section 03700) for repairing damaged concrete that may be identified after the existing coating is removed and the underlying concrete is prepared for coating per Section 09900.
   2. Standard Specification Section 1-09.6, Force Account, applies to all other force account work on this project.
   3. Items that are to be accomplished under either of the Force Account arrangements are indicated in the following section with *italicized font*.

B. Coordination with Coatings Inspector:
   1. Throughout all phases of the project, the Contractor is to provide the Coating Inspector with the results of the Contractor's QA/QC inspections.
   2. Support the activities of the Coating Inspector to perform QA/QC inspections to verify compliance with the specifications and the coating manufacturer's recommendations. See Section 09900 for a description of the QA/QC inspections.

C. PS-10 Rehabilitation:
   1. The existing PS-10 site is located on an approximately 20 ft wide landscaped island on the north side of the Industry Drive Right-of-Way. A 10 ft wide utility easement is located in the paved parking area immediately north of the pump station site. This easement is to be used by the Contractor for locating the sewage bypass pumps, as well as other equipment and materials that will be used in the construction. The Contractor is to make separate arrangements with the property owner for the temporary use of the existing parking area on the north side of the easement.
   2. The existing pump station facilities include a 6 ft diameter wetwell with two submersible pumps, a valve vault, and a board-mounted electrical system. The existing pump station has a 30 Amp, 208 V three phase service, fed from a transformer on the south side of Industry Drive.
   3. This project includes replacing the existing electrical service with a new 60 Amp, 277/480 V three phase service, fed from a new transformer to be located on the west side of the pump station site. This conversion of the electrical service is included as part of the relocation of the primary power.
   4. Before the pump station is taken out of service to begin the rehabilitation work, the Contractor is to complete the relocation of the primary power conduit that traverses the site in an east-west direction. The power relocation includes:
      a. Install a junction box to intercept the existing power on the east side of the site.
      b. Route new primary power conduit from the junction box to an easement on the north border of the site, and traverse the site to the new transformer location on the west side of the site.

   c. Install a transformer vault for a new 75 KVA transformer (to be installed by Tacoma Power) to serve the pump station.
   d. Coordinate with Tacoma Power for their installation of the primary cables, the installation of the transformer, the termination of the cables, and the setting of the permanent meter.
5. Before the pump station is taken out of service to begin the rehabilitation work, the Contractor is to complete the water system improvements on the east and west sides of the pump station site. These improvements include the installation of gate valves to allow the water main located immediately adjacent to the pump station site to be isolated during the installation of the shoring for the excavation necessary to remove and replace the existing valve vault. The water system improvements also include various improvements to existing services on the east and west sides of the pump station, including a new meter vault, reduced pressure backflow preventer assemblies, and a water sampling station.
6. Following acceptance of the primary power relocation/new power service, and of the water system improvements, install a temporary sewage bypass around the pump station to allow the station to be taken out of service for the duration of the PS-10 Rehabilitation. The capacity of the temporary sewage bypass is indicated in the Contract Drawings.
   a. The method of bypass is to install sewer bypass plugs in the two influent lines to the wetwell, and route temporary suction piping to the surface, to the bypass pump located in the parking area north of the site.
   b. Use self-priming sewage bypass pumps for the primary as well as backup bypass pump.
   c. Route temporary discharge piping from the temporary bypass pumps to the designated location on the existing 6-inch diameter forcemain approximately 16 feet west of the existing valve vault.
   d. After satisfactory operation of the bypass system is confirmed, the City will pull the submersible pumps from the wetwell, and vactor the remaining sewage from the wetwell. The existing pump station is now completely available to the Contractor for rehabilitation work.
7. Clear and grub the existing pump station site.
8. Install shoring in the adjacent lane of Industry Drive, as well as a dewatering system, to allow removal of the existing vault and pump discharge piping and the installation of the new vault and pump discharge piping.
9. Remove the existing concrete manhole cover over the wetwell. Remove a portion of the upper wall of the wetwell to help lower the grade of the new cover slab.
10. Install all buried utilities on site, including the following:
    a. New pump discharge piping between the existing wetwell and the new vault (DIP).
    b. Miscellaneous small diameter pipelines (a vent line serving the air relief valve, and a vent for the wetwell).
    c. Electrical conduit, including a new junction box near the wetwell for connecting submersible cabling.
11. Backfill excavated area with crushed surfacing base course (to be used for all backfill on this project) and remove the temporary shoring.
12. Construct new cover slabs with aluminum hatches over the wetwell and the valve vault.
13. Install barrier curb on the north side of the site, complete with 8-inch diameter bollards.
14. Construct a concrete slab and foundations for a pre-engineered weather cover immediately north of the new vault. Construct the pre-engineered weather cover, including the pre-engineered supports for the new electrical equipment.
15. Install new piping, valving, and equipment in the new valve vault, including an air relief valve and a magnetic flow meter.
16. Prepare the concrete surfaces in the wetwell for coating by abrasive blasting or high pressure water jetting per Section 09900.
17. *The Contractor's grouting subcontractor and the Coating Inspector shall inspect the wetwell structure to identify areas having groundwater leakage (Force Account for Coating Work). Groundwater leakage shall be sealed with chemical grout injection as discussed for PS-5 and in Section 02658*
18. Apply the concrete coating as described for PS-5. The concrete coating is to be Fiber Reinforced Epoxy, or the Polyurethane Alternative.

19. Install the new piping in the existing wetwell, including the new pump discharge piping, a new drain line from the new vault, and a vent pipe from the valve vault.
20. Coat the metal piping and other ferrous or galvanized metal in the wetwell and the valve vault with high-build epoxy as described for PS-5.
21. Install new submersible pumps and guide rails in the wetwell.
22. Install new electrical equipment beneath the weather cover, including the following:
    a. Electrical service meter
    b. Service disconnect
    c. Receptacle for portable generator and manual transfer switch
    d. Submersible pump control panel
    e. Power panel
23. Install wiring between the electrical equipment area and the new valve vault and the wetwell.
24. Coordinate with the City on the start-up of the new submersible pumps in the wetwell and the disassembly of the temporary sewage bypass system.
    a. Disconnect the temporary bypass connection at the existing forcemain, and complete the connection of the discharge pipe from the valve vault to the existing forcemain.
    b. Pull the bypass sewer plugs and temporary piping from the wetwell, allowing sewage to flow into the wetwell.
    c. Verify the proper operation of the new pumps and pump control system prior to removing the bypass pumps and piping from the site.
25. Construct civil site features:
    a. Replace curbs, curb and gutter, driveway, and damaged pavement at the pump station site, as well as in the areas of the water system improvements on the east and west sides of the pump station.
    b. Plane and overlay the patched pavement areas.
    c. Construct ADA curb ramp from the driveway on the east side of the site.
    d. Cover damaged landscaped areas with 6-inches of topsoil in preparation for a separate City landscaping contract following completion of the Contractor's work at this site.

D. PS-5 Wetwell Coating:
1. Install temporary sewage bypass around the pump station to allow the station to be taken out of service for the duration of the wetwell coating work. The capacity of the temporary sewage bypass is indicated in the Contract Drawings.
    a. The method of bypass is to install temporary PVC suction piping at a manhole located in 20th St E, approximately 130 ft east of the wetwell. Coordinate with the City to temporarily shut down PS-6 to allow workers to enter the upstream manhole (which receives the discharge of the PS-6 forcemain).
    b. Route temporary piping from the manhole to the designated area outside of the roadway to provide above-grade connections for the bypass pumps.
    c. Use self-priming sewage bypass pumps for the primary as well as backup bypass pump.
    d. Install temporary discharge piping from the temporary bypass pumps to the designated connection in the valve vault downstream of the wetwell.
    e. The route includes a crossing of an existing irrigation ditch and access road. Refer to the Contract Drawings for specific requirements for these crossings.
2. Coordinate with the City to shut down the existing pumps to allow the start-up and testing of the temporary bypass system.
3. After satisfactory operation of the bypass system is confirmed, the City will pull the submersible pumps from the wetwell and vactor the remaining sewage from the wetwell. The existing pump station is now completely available to the Contractor for the coating rehabilitation work.
4. Wash and clean the interior of the wetwell prior to removing any of the existing polyurea coating.
5. Remove the existing polyurea coating from the wetwell wall using scraper bars or other mechanical methods, as well as high pressure water spray (5,000 psi).
6. The existing polyurea lining on the concrete walls and floor of the valve vault and meter vault is to remain.

7. After removal of the existing coating, the wetwell shall be washed with a cleaning solution as specified to completely remove remaining contaminants from the concrete and metal surfaces.
8. Assist the City with the repair of the existing stainless steel slide gate controlling flow between the influent channel and the active wetwell.
   a. Remove the slide gate from the wetwell and provide it to the City for repair.
   b. The City will have the gate repaired by the manufacturer. After the City delivers the repaired gate to PS-5, the Contractor is to reinstall the gate.
9. Conduct a TV Inspection of the existing 36-inch diameter influent line. The City will review the results of the inspection and consider proceeding with the installation of a cured-in-place-pipe (CIPP) to protect the influent line (Bid Alternative 1A).
10. Prepare the concrete surfaces in the wetwell for coating by abrasive blasting or high pressure water jetting per Section 09900.
11. *The Contractor's grouting subcontractor and the Coating Inspector shall inspect the wetwell structure to identify areas having groundwater leakage (Force Account for Coating Work).*
    a. Following acceptance of the grouting submittals, the grouting shall proceed without delay.
    b. All areas of groundwater leakage shall be sealed.
    c. A final inspection will be performed to confirm that no further grouting will be necessary.
    d. See Section 02658 for further information.
12. *The Contractor is to coordinate with the Coating Inspector and inspect concrete areas that require repair (Force Account for Coating Work).*
    a. Concrete repair is defined as the filling of depressions of ½-inch or deeper.
    b. The specified concrete mortar will be used to complete all concrete repairs.
    c. Any exposed reinforcement is to be prepared, coated with epoxy, and properly cured before being embedded in the concrete mortar.
    d. See Section 03700 for further information on concrete repair.
13. Prepare heavily corroded metal surfaces (primarily ductile iron pipe in the wetwell) by abrasive blasting to meet SSPC-SP5 (white metal blast cleaning).
    a. If the existing coating on the ductile iron pipe in the wetwell or in the vaults is tightly adhered, the coating shall be sweep blasted (SSPC-SP7) prior to coating.
    b. Following inspection of the prepared metal surfaces, apply the epoxy prime coat to all metal surfaces to prevent rusting of the exposed metal surfaces.
14. Following the repair of concrete surfaces, the specified concrete coating system is to be applied per Section 09900.
    a. Do not apply the new coating in the wetwell until the cored openings for the air piping (for the wetwell aeration/mixing system have been completed).
    b. The specified filler/surfacer shall be used to fill voids and bugholes less than ½-inch deep.
    c. Apply a 1/16" (62 mils DFT) skim coat of filler/surfacer to the concrete surface of the wetwell.
    d. Following inspection of the skim coat, apply one of the two specified concrete coatings: Fiber-reinforced epoxy @ 125 mils DFT or the Alternative Polyurethane Coating @ 220 mils.
    e. If the fiber-reinforced epoxy is applied in the wetwell, following adequate cure time, a top coat of high-build epoxy @ 20 mils DFT is to be applied.
15. Following inspection of the primed surface of the ductile iron pipe in the wetwell, apply the high-build epoxy coating (40 mils DFT).
16. Following inspection of the primed surface of the ductile iron pipe and galvanized pipe stands in the vaults, apply the high-build epoxy coating (20 mils DFT).
17. Coordinate with the Coating Inspector to perform final inspection and QA/QC testing. Correct any deficiencies noted.
18. Extend the existing 4" diameter drain lines to go below the grating level in the wetwell. The drain lines serve the valve and meter vaults.
19. Installation of Wetwell Aeration/Mixing System:
    a. Install the packaged blower units on a new blower pad on the north side of the electrical equipment shelter.

b. Install new power conduit and wiring from the electrical equipment shelter to the blower pad.
c. Install 3-inch PVC air piping from the blower pad to the wetwell via routing through the valve vault.
d. Do not install the aeration piping or the mixers in the wetwell until after the coating work has been completed in the wetwell.
e. Install the mixer units on new grout pads in the wetwell, and connect to the supply air piping.

20. Coordinate with the City for the reinstallation of the permanent pumps in the wetwell and the disassembly of the temporary sewage bypass system.
    a. After City authorization is received, disconnect the bypass pipe from the forcemain connection in the valve vault.
    c. Remove the sewer plug in the upstream manhole and verify proper operation of the permanent pumps.
    d. Coordinate with the City to temporarily shut down PS-6 to allow workers to enter the upstream manhole to remove the PVC bypass pipe.
    e. Install blind flanges and caps to seal the ends of the pipe spools installed in the upstream manhole, and leave the spools in place.
    f. Completely remove the temporary buried ductile iron bypass piping as well as all the above-grade sewage bypass pumping and piping system.
21. Restore all roads, sidewalks, and other items damaged during the installation of the sewage bypassing system, or the wetwell aeration/mixing system at PS-5.

E. PS-6 Wetwell Coating:
1. Install temporary sewage bypass around the pump station to allow the station to be taken out of service for the duration of the wetwell coating work. The capacity of the temporary sewage bypass is indicated in the Contract Drawings.
    a. The method of bypass is to install temporary PVC suction piping at a manhole located approximately 25 ft north of the wetwell in 20th St E. Coordinate with the City to temporarily shut down PS-8 and PS-12 to allow workers to enter the upstream manhole (which receives the discharge of the forcemains from these pump stations).
    b. Route temporary piping from the manhole to the designated area outside of the roadway to provide above-grade connections for the bypass pumps.
    c. Use self-priming sewage bypass pumps for the primary as well as backup bypass pump
    d. Install temporary discharge piping from the temporary bypass pumps to the designated connection in the valve vault downstream of the wetwell.
2. Coordinate with the City to shut down the existing pumps to allow the start-up and testing of the temporary bypass system.
3. After satisfactory operation of the bypass system is confirmed, the City will pull the submersible pumps from the wetwell, and vactor the remaining sewage from the wetwell. The existing pump station is now completely available to the Contractor for the coating rehabilitation work.
4. Wash and clean the interior of the wetwell prior to removing any of the existing polyurea coating.
5. Remove the existing polyurea coating from the wetwell wall using scraper bars or other mechanical methods, as well as high pressure water spray (5,000 psi).
6. The existing polyurea lining on the concrete walls and floor of the valve vault and meter vault is to remain.
7. After removal of the existing coating, the wetwell shall be washed with a cleaning solution as specified to completely remove remaining contaminants from the concrete and metal surfaces.
8. As specified for PS-5, the existing 4” diameter drain lines are to be extended to go below the grating level in the wetwell.
9. As specified for PS-5, the existing stainless steel sluice gate between the influent channel and the active wetwell is damaged and is to be removed, provided to the City for repair, and then reinstalled by the Contractor.

10. Conduct a TV Inspection of the existing 36-inch diameter influent line. The City will review the results of the inspection and consider proceeding with the installation of a cured-in-place-pipe (CIPP) to protect the influent line (Bid Alternative 1B).
11. Prepare the concrete surfaces in the wetwell for coating by abrasive blasting or high pressure water jetting per Section 09900.
12. *The Contractor's grouting subcontractor and the Coating Inspector shall inspect the wetwell structure to identify areas having groundwater leakage (Force Account for Coating Work).*
    a. *Following acceptance of the grouting submittals, the grouting shall proceed without delay.*
    b. *All areas of groundwater leakage shall be sealed.*
    c. *A final inspection will be performed to confirm that no further grouting will be necessary.*
    d. *See Section 02658 for further information.*
13. *The Contractor is to coordinate with the Coating Inspector and inspect concrete areas that require repair (Force Account for Coating Work).*
    a. *Concrete repair is defined as the filling of depressions of ½-inch or deeper.*
    b. *The specified concrete mortar will be used to complete all concrete repairs.*
    c. *Any exposed reinforcement is to be prepared, coated with epoxy, and properly cured before being embedded in the concrete mortar.*
    d. *See Section 03700 for further information on concrete repair.*
14. Prepare heavily corroded metal surfaces (primarily ductile iron pipe in the wetwell) by abrasive blasting to meet SSPC-SP5 (white metal blast cleaning).
    a. If the existing coating on the ductile iron pipe in the wetwell or in the vaults is tightly adhered, the coating shall be sweep blasted (SSPC-SP7) prior to coating.
    b. Following inspection of the prepared metal surfaces, apply the epoxy prime coat to all metal surfaces to prevent rusting of the exposed metal surfaces.
15. Following the repair of concrete surfaces, the specified concrete coating system is to be applied per Section 09900.
    a. Do not apply the new coating in the wetwell until the cored openings for the air piping (for the wetwell aeration/mixing system have been completed).
    b. The specified filler/surfacer shall be used to fill voids and bugholes less than ½-inch deep.
    c. Apply a 1/16" (62 mils DFT) skim coat of filler/surfacer to the concrete surface of the wetwell.
    d. Following inspection of the skim coat, apply one of the two specified concrete coatings: Fiber-reinforced epoxy @ 125 mils DFT or the Alternative Polyurethane Coating @ 220 mils.
    e. If the fiber-reinforced epoxy is applied in the wetwell, following adequate cure time, a top coat of high-build epoxy @ 20 mils DFT is to be applied.
16. Following inspection of the primed surface of the ductile iron pipe in the wetwell, apply the high-build epoxy coating (40 mils DFT).
17. Following inspection of the primed surface of the ductile iron pipe and galvanized pipe stands in the vaults, apply the high-build epoxy coating (20 mils DFT).
18. Coordinate with the Coating Inspector to perform final inspection and QA/QC testing. Correct any deficiencies noted.
19. As specified for PS-5, extend the existing 4" diameter drain lines to go below the grating level in the wetwell. The drain lines serve the valve and meter vaults.
20. Installation of Wetwell Aeration/Mixing System:
    a. Install the packaged blower units on a new blower pad on the east side of the valve vault.
    b. Install new power conduit and wiring from the electrical equipment shelter to the blower pad.
    c. Install 3-inch PVC air piping from the blower pad to the wetwell via routing through the valve vault.
    d. Do not install the aeration piping or the mixers in the wetwell until after the coating work has been completed in the wetwell.
21. Install the mixer units on new grout pads in the wetwell, and connect to the supply air piping.
22. The dissassembly of the sewage bypass system are as specified for PS-5, with the following modifications:

a. Coordinate with the City for the reinstallation of the permanent pumps in the wetwell and the disassembly of the temporary sewage bypass system.
b. Coordinate with the City to temporarily shut down PS-8 and PS-12 to allow workers to enter the upstream manhole to remove the PVC bypass pipe.

23. Replacement of the Existing Magnetic Flow Meter:
    a. The existing 20-Inch magnetic flow meter and associated cable is to be removed from the meter vault, and is to be disposed of by the Contractor.
    b. Install the replacement mag meter, cable, and signal converter. See the Contract Drawings and Specifications for additional details.

END OF SECTION

SECTION 01020

FORCE ACCOUNT PROCEDURES FOR COATING WORK

PART 1 GENERAL

1.01 SUMMARY

A. This Section covers the force account procedures to be followed for the following work, which is collectively referred to as Force Account for Coating Work:
   1. Chemical Injection Grouting (Section 02658)
   2. Concrete Repair (Section 03700)

B. This Section completely replaces Section 1-09.6 of the Standard Specification, and includes methods for tracking the labor, equipment, and materials costs for the Force Account for Coating Work.

C. Section 1-09.6 of the Standard Specifications applies to all non-Force Account for Coating Work.

1.02 DEFINITIONS

A. Grouting subcontractor: Hired by the Contractor to complete the work described in this specification, including submittals.

B. Coating Inspector: The NACE-Certified inspector working for Tetra Tech Inc.

C. Project Inspector: The inspector for all non-coating work, and for tracking the Contractor's labor, equipment, and materials used to accomplish Force Account for Coating Work. The Project Inspector works for David Evans and Associates (DEA).

1.03 SUBMITTALS

A. Procedures: Section 01300.

B. Force Account Forms for Coating Work:
   1. Submit a Daily Force Account for Coating Work Report Form (attached) every day that this work is performed, to the Project Inspector for his review and signature.
   2. Submit a Force Account for Coating Work Calculation Form (attached) for every day that this work is performed.
      a. Submit the previous week's forms no later than the following Wednesday COB.
      b. Provide backup information for material costs (invoices, calculations, etc.).
      c. Send the forms to the following parties:
         1) City of Fife
         2) Project Engineer (Tetra Tech)
         3) Project Inspector (David Evans and Associates)

1.04 BASIS OF FORCE ACCOUNT FOR COATING WORK COSTS

A. Labor Costs:
   1. Include the direct labor rate for a worker performing the Force Account For Coating Work plus 29% to cover Contractor overhead and profit.
   2. An additional 12% will be added to the direct labor rates to cover the Contractor's (and subcontractor's, if applicable) management of the Force Account For Coating Work, including the collection, recording, and submitting force account costs for payment.
   3. Labor Costs include the travel time for workers traveling from the Contractor's or subcontractor's shop to the project sites.
      a. A maximum travel time of one hour is allowed for travel costs to and from the work site (i.e., two hours maximum charge per day).

b. No per-diem expenses (lodging, meals, etc.) will be paid.
4. Overtime costs will not be paid unless prior approval from the City is obtained.

B. Force Account for Coating Work Equipment Costs:
1. Force Account for Coating Work Equipment Costs include equipment traveling to, and used on the project site to complete the Force Account for Coating Work.
2. All equipment required for this work is to be paid on the basis of the hourly equipment rate entered in the bid schedule for the specific type of force account work being accomplished (chemical injection grouting or concrete repair). The hourly rate is to include the following costs for Force Account for Coating Work Equipment:
   a. Vehicles, chemical injection equipment, power generators, ventilation equipment, heaters, hoists, sump pumps, scaffolding, tarps, miscellaneous hand and small power tools, and similar equipment.
   b. Cost of rental equipment
   c. Contractor's project overhead, general company overhead, profit, bonding, insurance, taxes, and any other costs associated with providing equipment for the Force Account for Coating Work.
3. The time charged per day for Force Account for Coating Work Equipment cannot exceed the time charged by the work crew for Labor Costs for that work for a particular day.

C. Bypass and Miscellaneous Coating Work Equipment Costs:
1. Are to be paid on the basis of the daily rate entered in the bid schedule. Bypass and Miscellaneous Coating Work Equipment Costs include the following costs:
   a. Operating and maintaining the sewage bypass system during the time that Force Account for Coating Work is being performed.
   b. Equipment rental costs for bypass pumps and piping.
   c. Costs for Contractor's equipment that remains on site 24 hrs per day, including trailers, equipment that is not utilized in the Force Account for Coating Work, weather covers, and temporary shelters.
   d. Contractor's project overhead, general company overhead, profit, bonding, insurance, taxes, and any other costs associated with providing Bypass and Miscellaneous Equipment during the Force Account for Coating Work.
2. When other non-Force Account for Coating Work is performed at the site during the day, either during the Force Account for Coating Work, or on its own, the time allotted to the Bypass and Miscellaneous Coating Work Equipment Costs is to be pro-rated.
   a. For example, if Force Account for Coating Work is performed for 2 hrs, and non-force account work is performed for the remaining 6 hrs of the day, 1/4 day would be charged to Bypass and Miscellaneous Equipment Costs for Coating Work.

D. Material Costs:
1. Includes actual costs for materials used in the Force Account for Coating Work, plus 21% to cover Contractor overhead and profit.
2. An additional 12% will be added to the material costs to cover the Contractor's (and subcontractor's, if applicable) management of the Force Account for Coating Work, including submittals on the materials and equipment used in the Force Account for Coating Work.
3. Contractor is to provide invoices for the material used in the Force Account for Coating Work.
   a. This information is to be provided with the attached Force Account Calculation Forms.
   b. For materials bought in bulk, provide basis for unit costs being charged.

1.05 FORCE ACCOUNT FOR COATING WORK COST TRACKING

A. Daily Force Account Report
1. Complete the Daily Force Account for Coating Work Report Form (attached) and submit it to the Project Inspector every day this work is performed at the work site.
   a. The Daily Force Account for Coating Work Report Form is to be used to record all labor, equipment, and materials used to complete the Force Account for Coating Work.
   b. The form is intended to be completed by hand in the field.
   c. The form is to be signed by the party accomplishing the Force Account for Coating Work, whether that is the Contractor or his Subcontractor.

d. The Project Inspector will e-mail approved Daily Force for Account Coating Work Report forms to all parties (City, Contractor, Tetra Tech) on a weekly basis.

B. Force Account Calculation Form.
   1. The Force Account for Coating Work Calculation Form is to reflect the information recorded in the Daily Force Account for Coating Work Report for a particular day.
   2. Complete the Force Account for Coating Work Calculation Form (attached) and submit it to all parties on a weekly basis as indicated in the Submittals section.

PART 2 PRODUCTS (NOT USED)

PART 3 EXECUTION

3.01 GENERAL

A. Coordinate with the Project Inspector on the following:
   1. The schedule for performing Force Account for Coating Work at each of the work sites.
   2. Signing the Daily Force Account Coating Work Report.

B. Complete the Force Account for Coating Work Calculation Forms and submit them as discussed in the Submittal section.
   1. Any discrepancies in the quantities shown in the Daily Force Account for Coating Work Reports are to be explained in the notes on the Force Account for Coating Work Calculation Form.
   2. Provide backup information for material costs (invoices, calculations, etc.).

END OF SECTION

Force Account for Coating Work Calculation Form

PS-10 Rehabilitation / PS-5 & PS-6 Wetwell Coating

Date:	
Force Account for Coating Work Performed:	

1. Labor (Name)	Travel Time (hrs)	Work Time (hrs)	Total Time (hrs)	wage ($/hr)	OH & Profit @29 %	FA Manage-ment @12%	Cost ($/hr)	Cost
					$0.00	$0.00	$0.00	$0.00
					$0.00	$0.00	$0.00	$0.00
					$0.00	$0.00	$0.00	$0.00
					$0.00	$0.00	$0.00	$0.00
					$0.00	$0.00	$0.00	$0.00
					$0.00	$0.00	$0.00	$0.00
					$0.00	$0.00	$0.00	$0.00
					$0.00	$0.00	$0.00	$0.00
Total Labor Cost								$0.00

2. Force Account for Coating Work Equipment		Total Time (hrs)		Cost ($/hr)	Cost
					$0.00

3. Bypass & Misc Equipment		Days		Cost ($/day)	Cost
					$0.00

4. Materials	Units	Raw Cost ($/unit)	OH & Profit @21 %	FA Manage-ment @12%	Cost ($/unit)	Cost
			$0.00	$0.00	$0.00	$0.00
			$0.00	$0.00	$0.00	$0.00
			$0.00	$0.00	$0.00	$0.00
			$0.00	$0.00	$0.00	$0.00
			$0.00	$0.00	$0.00	$0.00
			$0.00	$0.00	$0.00	$0.00
Total Materials Cost						$0.00

Total Force Account Cost (Items 1-4) $0.00

Notes:

1.
2.
3.
4.

Daily Force Account for Coating Work Report Form

PS-10 Rehabilitation / PS-5 & PS-6 Coating

Date:	
Force Account for Coating Work Performed:	

1. Labor (Name)	Travel Time to Site (hrs)	Work Time (hrs)	Total Time (hrs)

2. Force Account for Coating Work Equipment	Travel Time to Site (hrs)	Work Time (hrs)	Total Time (hrs)

3. Bypass & Miscellaneous Equipment		Days

4. Materials	Unit of Measure	Quantity Used

Signature _____

Contractor Representative _____

Signature _____

Construction Inspector _____

SECTION 01300

SUBMITTALS PROCEDURE

PART 1 GENERAL

1.01 SUMMARY

A. This Section specifies procedures and requirements for all submittals, substitutions, deviations, and the master submittal list required by the Specifications.

B. No fabrication or construction work shall occur on a specific submittal item without a submittal Review Action of “1” NO EXCEPTIONS TAKEN or “2” NOTE MARKINGS.

1.02 MASTER SUBMITTAL LIST

A. Prepare and submit within 20 days after the effective date of the Notice to Proceed, a Master Submittal List listing of all items for which submittals are required by the Specifications. Organize the Master Submittal List by Specification Section number and include the following information for all listed items:
   1. Item identification.
   2. Specification Section number.
   3. Planned submittal date.

1.03 CONTRACTOR RESPONSIBILITIES

A. Be responsible for the accuracy and completeness of the information contained in each submittal.

B. Verify that the material and equipment described in each submittal conforms to the requirements of the Contract prior to submittal.

C. Ensure coordination of submittals among the suppliers, related crafts, subcontractors, and with the planned work. The Contractor will be held responsible for any cost or schedule impact caused by a submittal coordination failure.

PART 2 PRODUCTS

2.01 NOT USED.

PART 3 EXECUTION

3.01 TRANSMITTAL PROCEDURE

A. General:
   1. Submittals shall be accompanied by Submittal Transmittal Sheet (attached at end of this specification).
   2. A unique number, sequentially assigned, shall be noted on the transmittal form accompanying each item submitted. Original submittal numbers shall have the following format: “XX”; where “XX” is the sequential number assigned by the Contractor. Resubmittals shall have the following format: “XXY”; where “XX” is the originally assigned submittal number and “Y” is a sequential letter assigned for re submittals, i.e., A, B, or C being the 1st, 2nd, and 3rd resubmittals, respectively. Submittal 04B, for example, is the second resubmittal of Submittal 04..
   3. Transmit an electronic pdf document of each submittal or resubmittal to the Project Engineer via e-mail (form contains e-mail address). The electronic document must be accompanied with a completed Submittal Transmittal Sheet. Digital files in excess of 10 MB should be divided into separate e-mails.

3.02 REVIEW PROCEDURE

A. The Project Engineer will transmit review comments via e-mail to the Contractor and the City within 7 days after receipt of each submittal or resubmittal.

The returned submittal will indicate one of the following actions:

1. If the review indicates that the submittal is in general conformance with the Contract, the submittal copies shall be marked "No Exceptions Taken" and given a Review Action of "1." In this case, implement the work covered in the submittal.
2. If the review indicates that the submittal requires limited corrections, the submittal copies will be marked "Note Markings" and given a Review Action of "2." In this case, begin to implement the work covered in the submittal in accordance with the markings noted.
3. If the review reveals the submittal is insufficient or contains incorrect data, and the comments are of a nature that can be confirmed, the submittal copies shall be marked "Comments Attached --Confirm" and given a Review Action of "3." A Review Action “3” does not allow implementation of the work covered by the submittal until the information requested to be confirmed in the submittal has been submitted, reviewed, and returned to the Contractor with a Review Action of either "1" or "2.”
4. If the review reveals the submittal is insufficient or contains incorrect data and the comments require that the submittal be revised and resubmitted, the submittal copies shall be marked "Comments Attached --Resubmit" and given a Review Action of "4.” A Review Action “4” does not allow implementation of the work covered by the submittal until the information in the submittal has been resubmitted, reviewed, and returned to the Contractor with a Review Action of either "1" or "2.”
5. If the review reveals that the submittal is not in general conformance with the Contract, or if the submittal is incomplete, the submittal copies shall be marked "Rejected" and given a Review Action of "5." Submittals containing deviations or substitutions from Contract which have not been clearly identified by the Contractor fall into this category. A Review Action “5” does not allow implementation of the work covered by the submittal until the information in the submittal has been revised, resubmitted, and returned with a Review Action of either "1" or "2.”

3.03 EFFECT OF REVIEW OF SUBMITTALS

A. Review of submittals shall not relieve the Contractor of its responsibility for errors or omission therein and shall not be regarded as an assumption of risks or liability by the City.

END OF SECTION

Submittal Transmittal Sheet

Tetra Tech
1420 Fifth Avenue, Suite 600
Seattle, WA 98101-2357
Attn: Bruce Gravette
E-mail: bruce.gravette@tetratech.com
Phone: (206) 883-9382

Tt Job No: 135-12584-14002
Project Desc. PS-10 Rehabilitation / PS-5 and PS-6 Wetwell Coating
Owner: City of Fife

Contractor Submittal No: _____ **Date:** _____
Contractor: _____
Subcontractor or Supplier: _____

THIS SECTION TO BE COMPLETED BY CONTRACTOR					THIS SECTION TO BE COMPLETED BY ENGINEER	
Item No.	Specification Section/Paragraph	Dwg. No.	Description of Submittal	Copies Subm.	Copies Retd.	Review Action

REVIEW ACTION LEGEND
1 No exceptions taken
2 Note markings/Comments
3 Note markings/Comments – confirm in writing
4 Note markings/Comments Resubmit
5 Rejected–Resubmit

COMMENTS by Tt Reviewer:

CONTRACTOR CERTIFIES TO REVIEW SUBMITTAL, VERIFICATION OF FIELD MEASUREMENTS AND COMPLIANCE WITH CONTRACT DOCUMENTS

BY _____ **DATE** _____
(Must be signed by Contractor)

FORWARDED TO: _____
Date:

	BY (INIT.)	DATE
SUBMITTAL RECD. Tt		
REVIEW COMPLETED		
RETURNED :		

DISTRIBUTION BY Tt:

SECTION 01730

OPERATION AND MAINTENANCE MANUALS

PART 1 GENERAL

1.01 SUMMARY

A. This Section specifies operating and maintenance (O&M) manuals.

1.02 SUBMITTALS

A. Procedures: Section 01300.

B. Schedule:
   1. Provide initial submittal prior to substantial completion.
   2. Provide final submittal after incorporating review comments on the initial submittal.

C. Provide the following items for the O&M information:
   1. Names and addresses of the manufacturer, the nearest representative of the manufacturer, and the nearest supplier(s) of the manufacturer's equipment and parts.
   2. Significant design criteria including pertinent calculations used in designing, selecting, or verifying the suitability of the installed equipment.
   3. Performance data and curves: manufacturer's certified performance data and curves when specified in the Contract; otherwise, manufacturer's catalog performance data and curves.
   4. Lubrication information: manufacturer's recommendations regarding the lubricants to be used and lubrication schedule to be followed.
   5. Control diagrams: include diagrams for internal and connection wiring.
   6. Installation and startup procedures: manufacturer's recommendations for installation, adjustment, calibration, and troubleshooting.
   7. Operating procedures: manufacturer's recommended step-by-step procedures for starting, operating, and stopping the equipment under specified modes of operation.
   8. Preventive maintenance procedures: manufacturer's recommended steps and schedules for maintaining the equipment.
   9. Overhaul instructions and required parts and materials: Manufacturer's directions for the disassembly, repair, and reassembly of the equipment, parts and any safety precautions that must be observed while performing the work.
      a. Overhaul parts list: Manufacturer's recommendations of manufacturer's part numbers and quantity of parts which may be required for a complete overhaul, as well as the generic title, description and manufacturer's part number of each component part of the equipment.
      b. Exploded view or plan and section views: Detailed plan and section views of equipment shall be provided when exploded views are not available. All views shall have detailed part callouts matching those callouts of the manufacturer's overhaul parts list. Exploded or cut views of equipment shall be provided, if available, as a standard item of the manufacturer's information.
         1) Specific information: as necessary where items of information are not included in the above list but are required.

1.03 BINDER MATERIALS

A. Binders for final bound O&M manuals:
   1. 3-post.
   2. Durable covers with metal piano hinges and locking slide bar assembly.
   3. Capable of extending to a maximum 5-inch thickness.
   4. Acceptable Manufacturers:
      a. Speciality Loose Leaf Inc. Model 98086.
      b. Oxford Esselte C619-3.

c. Or Approved Equal.

1.04 ELECTRONIC MATERIALS

A. Electronic copies of material:
   1. CD-R disk or USB flash drive.

PART 2 PRODUCTS (NOT USED)

PART 3 EXECUTION

3.01 INITIAL SUBMITTAL

A. Required prior to Substantial Completion:
   1. One complete set of O&M information for all components of all systems.
   2. One complete copy in a bookmarked and searchable PDF file on CD-R or USB flash drive of the O&M information. Bookmarks shall be the same as the items in the Table of Contents.
   3. Organize in numerical order by the Specification Sections.
   4. Brochures and manuals contained therein shall be appropriately labeled with the applicable equipment name as it appears in the Contract Documents and shall indicate the Specification Section.
   5. Each electronic file shall contain a table of contents and shall be provided with tab sheets to permit easy location of the desired sections of the manual.

3.02 FINAL SUBMITTAL

A. Provide:
   1. Three complete individually bound sets of the approved O&M information.
   2. Two complete copies in a bookmarked and searchable PDF file on CD-R of the final, bound O&M information. Bookmarks shall be the same as the items in the Table of Contents.
   3. The information shall be organized in the binders in numerical order by the Specification Sections. All brochures and manuals contained therein shall be appropriately labeled with the applicable equipment name as it appears in the Contract Documents and shall also indicate the Specification Section.

END OF SECTION

SECTION 02105

TEMPORARY SEWAGE BYPASS

PART 1 GENERAL

1.01 SUMMARY

A. This Section specifies the requirements for all temporary sewage bypass around wetwells taken out of service for rehabilitation or other improvements. It also discusses assistance that will be provided by the City during the installation of the temporary sewage bypass.

1.02 SUBMITTALS

A. Procedures: Section 01330.

B. Submit drawings and complete design data showing methods and equipment that the Contractor proposes to utilize at all locations for temporary sewage bypass flow. The submittal shall include the following information:
   1. A single line schematic showing the proposed configuration of the temporary sewer bypass. Indicate location of valves and check valves, and describe the connection to the forcemain in the valve vault.
   2. Capacities of pumps, power generators, and standby equipment.
   3. Details of the temporary pumping system controls, control logic, and alarm lights and signals.
   4. Details of the sewer plugs.
   5. The details of the temporary pipelines (pipe size, materials, pipe connections, pipe supports, valve descriptions).
      a. Temporary suction manifold to be installed at PS-10.
      b. Beam-supported temporary bypass pipe to be installed at PS-5 to span an existing drainage channel.
   6. Information on sewer plugs and sewer plugs with through-pipes.
   7. Acoustical information for the bypass pumps to confirm compliance with specified noise levels
   8. Provide emergency contact names/numbers.
   9. Provide information on the maintenance and repair support for the sewage bypass pump, including demonstrated capability for service representative to meet the specified response time to the site.

1.03 SEWAGE BYPASSING REQUIREMENTS

A. The following requirements apply to temporary sewage bypass systems for this project:
   1. Don’t impede sewage flows from any residence or business.
   2. The temporary sewage bypass system shall be provided with redundant components to allow quick repair and restoration of operations after the loss of a component.
   3. A stand-by pumping unit shall be available and connected to the temporary bypass piping to allow the automatic start-up of the standby unit with the activation of a high level float switch located in the bypass manhole, or other approved location.
   4. Activation of the high-level alarm is to also activate an emergency beacon light on top of the control panel for the backup pump.
   5. The temporary sewage bypass pumps shall be designed to run continuously.
   6. The diameter of the temporary pump suction pipe for the bypass pumps is to be as shown in the Contract Drawings.

7. The diameter of the temporary pump discharge pipe is to be as submitted by the Contractor based on the calculations and recommendation of the bypass pump supplier, and as approved by the Project Engineer.
8. The discharge lines of the duty pump and backup pump shall connect together in the vicinity of the bypass pumps, and a single discharge line shall extend to the connection to the forcemain downstream of the wetwell, as indicated in the Contract Drawings.
9. The discharge lines of the duty pump and backup pump shall be equipped with check valves to isolate each of the pumps from the common discharge line.
10. The bypass pipe connection at the designated forcemain connection is to have a shut-off valve to isolate the bypass system from the existing piping.
11. Comply with local noise level rules, regulations and ordinances. Each internal combustion engine used on the job shall be equipped with a critical grade muffler. Maximum noise levels of equipment shall not exceed 69 dBA at 30 ft.
12. Contractor shall assign a knowledgeable, trained worker to monitor the temporary sewage bypass system 24 hours per day.
13. Maintenance and repair support for the sewage bypass pumps.is to be available at the project site within 1 hour after notification, 24 hrs per day, 7 days a week.

B. The required flow capacity of the temporary sewage bypass systems for each pump station is indicated on the Contract Drawings.

PART 2 PRODUCTS

2.01 SEWAGE BYPASS PUMPS

A. Temporary sewage bypass pumps shall be diesel engine driven non-clog pumps, Godwin Pumps, as rented by Xylem, Kent, WA, or approved equal.

B. Sewer Plugs:
   1. Sewer plugs for PS-5 and PS-6 are to have a through-pipe of a minimum of 8-inches in diameter, equipped with a blind flange.
   2. Sewer plugs for PS-10 are to have a through-pipe of a minimum of 4-inches in diameter.
   3. Plugs are to be manufactured by Lansas, or approved equal

PART 3 EXECUTION

3.01 TEMPORARY SEWAGE BYPASS

A. General:
   1. When possible, plan and execute the work to install the temporary sewage bypass system during normal working hours.
   2. Do not undertake any work to install the temporary sewage bypassing system until all specified submittals have been submitted and reviewed.
   3. The work requiring temporary sewage bypass flow shall be executed vigorously to limit the amount of time the temporary system is in operation.
   4. Coordinate with the Project Engineer for approval of extended work hours if this is desired.

B. Provide 48 hours notice to the Project Engineer as well as to the City for the installation of the temporary sewage bypass system. Keep the Project Engineer and the City informed of any changes in the schedule.

C. PS-5 and PS-6 Bypass System Installation
   1. Coordinate with the City when planning to install the temporary suction pipe in the bypass manholes upstream of PS-5 and PS-6 to have the City shut off upstream pump stations that

have forcemains that discharge into the bypass manholes. The pumps stations can be shut down, utilizing available storage capacity in the sewage collection system, for the following time periods under most conditions:

a. PS-5 Bypass Manhole: PS-6 can be shut down for 2.5 hours.
b. PS-6 Bypass Manhole: PS-8 can be shut down for 2.5-3.0 hours. PS-12 can be shut down for 3.0-4.0 hours.

2. The Contractor is to plan the installation of the temporary suction pipe in the bypass manholes in stages between the necessary operation of the upstream pump stations.
3. City crews will be on-site when the Contractor desires to initiate the operation of the temporary sewage bypassing system.
4. The Contractor is to demonstrate the proper operation of the control system for the sewage bypassing system, including all alarms.
5. After the start-up of the sewage bypassing system and the proper operation of the system has been demonstrated, the City will complete the shut-down of the pump station, and vactor liquid wastes remaining in the wetwell.
6. The City will then remove the existing submersible pumps and related level switches from the wetwell.

D. The Contractor shall be liable for all cleanup, damages, and resultant fines in the event of a wastewater spill.

E. Equipment:
1. Provide pumps, piping, valves, and other equipment necessary to construct the temporary sewage bypass system.
2. Furnish the necessary labor and supervision to set up and operate the sewage pumping and bypass system while work is being performed in the wetwell.

F. Provide 48 hours notice to the Project Engineer as well as to the City for the removal of the temporary sewage bypass system. Keep the Project Engineer and the City informed of any changes in the schedule.

G. PS-5 and PS-6 Bypass System Removal:
1. After acceptance of the work requiring a sewage bypass has been obtained, the Contractor is to coordinate with the City on the re-installation of the pumps and level controls in the wetwell.
2. After the removal of the upstream sewer plug and the City's successful start-up of the pump station, remove the temporary suction pipe in the bypass manholes upstream of PS-5 and PS-6. Coordinate with the City for the shut off upstream pump stations as described previously for the installation of the temporary suction pipe.
3. The Contractor is to plan the removal of the temporary suction pipe in the bypass manholes in stages between the necessary operation of the upstream pump stations.
4. Remove the temporary bypass pipe connection to the piping manifold in the valve vault.
5. Haul all temporary piping, pumps, and other bypass equipment from the site.

3.02 RESTORATION AND REPAIR

A. Repair any damage that may result from the installation, maintenance, and operation of the sewage bypassing system.

END OF SECTION

SECTION 02658

CHEMICAL INJECTION GROUTING

PART 1 GENERAL

1.01 SUMMARY

A. This Section covers work, materials and equipment necessary for chemical injection grouting of the wetwells and equipment vaults, for plugging leaks and eliminating ground water infiltration.

B. This work is to be completed following the procedures specified in Section 01020, Force Account Procedures for Coating Work, for recording labor, equipment, and material costs required to complete the Chemical Injection Grouting for the various structures included in this project.

1.02 DEFINITIONS

A. Grouting subcontractor: Hired by the Contractor to complete the work described in this specification, including submittals.

B. Applicator: The person responsible for the actual work, either as the field foreman or the person actually performing the grouting.

C. Coating Inspector: The NACE Certified inspector working for Tetra Tech Inc.

D. Project Inspector: The inspector for all non-coating work, and for tracking the Contractor's labor, equipment, and materials used to accomplish Force Account work. Works for David Evans and Associates (DEA).

E. Leaks: Presence of water, or indications of water, inside the structures caused by water entering through cracks, fractures, holes, broken seals, joints, seams, or other defects.

1.03 QUALIFICATIONS

A. Certification from the grouting system manufacturer(s) that the Applicator has the training and qualifications and is approved by the grout manufacturer for the application of the grouting system.

1.04 SUBMITTALS

A. Procedures: Section 01300.

B. Documents required per the Instruction to Bidders
   1. Fife business license
   2. Statement of Intent to Pay Prevailing Wages

C. Provide a list of all equipment to be used in the grouting work before the equipment is delivered to the worksite. This equipment is considered "Force Account for Coating Work Equipment," per Section 01020.

D. Provide manufacturer's data for all materials used in the grouting work, including recommended application methods, and material safety data sheets (MSDS).

E. Refer to Section 01020, Force Account for Coating Work, for submittal requirements for the daily reports, and calculation forms to be completed to document the work performed.

1.05 QUALITY ASSURANCE/QUALITY CONTROL (QA/QC)

A. General:
   1. Deviations from the grout system manufacturer's printed instructions will not be allowed unless approved in writing by the manufacturer's representative and the Project Engineer before execution of the requested change.
   2. The Coating Inspector will observe grout mixing and application for general conformance the specifications.
   3. Coordinate an inspection of the below grade structures at the pump station site after the existing coating has been removed and the exposed concrete surface has been pressure washed and dried. The Coating Inspector and the grouting subcontractor will inspect the concrete surfaces for areas of leakage. The purpose of the inspection will be to view the areas of groundwater leakage, and discuss the approach for sealing these areas.

B. Grouting Subcontractor's responsibilities:
   1. Prepare the Daily Force Account for Coating Work Forms (per Section 01020) for recording the following:
      a. Labor Time: Names of individuals, and their travel time, and work time for the day.
      b. Force Account for Coating Work Equipment Time: Travel time, and work time for the day.
      c. Bypass and Miscellaneous Equipment: Days of operation during the chemical injection grouting. Partial days are to be charged when the chemical injection grouting activities occurred for less than a full 8-hr day.
      d. Materials: Quantities of grout, patching and sealing cement used during the day.

   2. Coordination with the Project Inspector:
      a. Meet with the Project Inspector to discuss the work activities planned for the day.
      b. Discuss issues that arise during the course of the work that may require input from Project Engineer, or the Coatings Inspector.
      c.. Submit the Daily Force Account for Coating Work Form to the Project Inspector for verification signature on a daily basis.
   3. Coordinate with the Contractor to schedule grouting activities to avoid conflicts between the grouting activity and the coating activity.
   4. Coordinate with the Coating Inspector to schedule inspections of the completed grout work, and determine if further grouting is necessary.

C. Project Inspector's responsibilities:
   1. Document the grouting subcontractor's work and quality control of the grouting installation.
   2. Co-sign the Daily Force Account for Coating Work Form from the grouting subcontractor.
   3. Coordinate with the Coatings Inspector to discuss issues and status of the grouting work, including any QA/QC issues from the inspection of the grouting work.

D. Final Inspection:
   1. Approximately 48 hours after the has completed the grouting of the structure, the Coatings Inspector and the grouting subcontractor will inspect the structure for any further signs of leakage or damp areas. Depending on the results of this inspection, additional grouting may be necessary.

1.06 DELIVERY, STORAGE AND HANDLING

A. Deliver materials for field application to the job site in their original, unopened, undamaged containers. Each container shall bear the manufacturer's name brand, batch number, date of manufacture, and storage life.

B. Grout shall be stored in enclosed structures and shall be protected from weather and excessive heat or cold, and spills. Materials exceeding storage life recommended by the manufacturer or that have been visibly damaged shall be removed from the site.

1.07 CONTAINMENT

A. No grouting materials, solvents, chemicals, or debris of any sort shall be allowed to enter the sewer.

PART 2 PRODUCTS

2.01 MATERIALS

A. General:
   1. Grouting components in a particular system shall be the products of a single manufacturer.
   2. The products of manufacturers other than those specified may be accepted when it is demonstrated that they are equal in composition, durability, and effectiveness for the purpose intended. Provide the product information requested in the “Submittals” section for the requested substitution.
   3. Additives may be added to the grout as recommended by the grout manufacturer to catalyze the product, control the set time, lower the freezing temperature, act as filler, provide strength, or for inhibiting root growth. All materials shall be approved by the manufacturer for use with the grout system.

B. Hydrophilic Chemical Grout:
   1. Avanti Grout, System AV-315 Microfoam
   2. DeNeef Sealfoam PURe
   3. Or approved equal.

C. Hydrophobic Chemical Grout:
   1. Avanti Grout, System AV-248-LV Flexseal LV
   2. Seal Boss 1510 Water Stop Foam
   3. DeNeef Flex LV PURe
   4. Or approved equal.

D. Grout for sealing injection holes:
   1. Krystol Bari-Cote
   2. Or approved equal.

PART 3 EXECUTION

3.01 GENERAL

A. Grouting work shall not proceed until the specified submittals have been reviewed and accepted by the Project Engineer.

3.02 CHEMICAL INJECTION GROUTING

A. Control gushing leaks using methods and material recommended by manufacturer

B. Drill injection port holes. Orientation and spacing per manufacturer recommendations.

C. Clean concrete residue from holes and install injection ports. Concrete surface is to form an even surface with adjacent concrete surfaces, and be suitable for coating.

D. Prepare for injection and begin pumping. Delivery pressures and flow rates shall be in accordance with manufacturer’s instructions.

E. Grouting, once commenced, shall be completed without stoppage. Maintain grout pressure until grout has set.

F. Grout travel shall be verified by observation of grout at defect(s) or adjacent injection hole(s). Provide additional holes as necessary to verify grout travel.

G. Seal injection holes.

3.03 CLEANUP

A. Thoroughly clean all surfaces and grind excess grout residue.

B. Remove excess grout residue from the interior of the structure.

END OF SECTION

SECTION 03700

CONCRETE REPAIR

PART 1 GENERAL

1.01 SUMMARY

A. This Section specifies the repair of concrete surfaces in the wetwell.

B. This work is to be completed following the procedures specified in Section 01020, Force Account Procedures for Coating Work, for recording labor, equipment, and material costs required to complete the Concrete Repair in the wetwells included in this project.

1.02 SUBMITTALS

A. Procedures: Section 01330.

B. Submit the following Manufacturer's information:
   1. Technical data on the concrete mortar (including recommended application instructions).
   2. Minimum and maximum curing time between coats.
   3. Minimum and maximum relative humidity requirements.
   4. Minimum and maximum surface temperature requirements.
   5. Minimum and maximum ambient temperature requirements
   6. Material safety data sheets.

C. Documents required per the Instruction to Bidders
   1. Fife business license
   2. Statement of Intent to Pay Prevailing Wages

D. Provide a list of all equipment to be used in the concrete repair work before the equipment is delivered to the worksite. This equipment is considered "Force Account for Coating Work Equipment," per Section 01020.

E. Refer to Section 01020, Force Account for Coating Work, for submittal requirements for the daily reports, and calculation forms to be completed to document the concrete repair work performed.

1.03 QUALITY ASSURANCE/QUALITY CONTROL (QA/QC)

A. Concrete Repair Definition: The filling of voids 1/2-inch and deeper with a concrete mortar to restore the concrete to the desired level and shape. It also includes miscellaneous repairs to properly anchor and support existing equipment when necessary (e.g., ladders, pipe supports, etc.), and to remove abandoned supports and perform other minor repairs.

B. Contractor responsibilities:
   1. Prepare the Daily Force Account for Coating Work Forms (per Section 01020) for recording the following:
      a. Labor Time: Names of individuals, and their travel time, and work time for the day.
      b. Force Account for Coating Work Equipment Time: Travel time, and work time for the day.
      c. Bypass and Miscellaneous Equipment: Days of operation during the concrete repair. Partial days are to be charged when the concrete repair activities occurred for less than a full 8-hr day.
      d. Materials: Quantities of mortar, and other materials used in the repair work.

2. Coordination with the Project Inspector:
   a. Meet with the Project Inspector to discuss the work activities planned for the day.
   b. Discuss issues that arise during the course of the work that may require input from Project Engineer, or the Coatings Inspector.
   c. Submit the Daily Force Account for Coating Work Form to the Project Inspector for verification signature on a daily basis.

3. Coordination with the Coatings Inspector:
   a. Schedule the initial inspection of the prepared concrete surfaces (following abrasive blasting), to identify and document concrete areas to be repaired.
   b. Schedule follow-up inspections to inspect prepared surfaces to receive the mortar, inspect the completed repairs, and determine if further concrete repair work is necessary.

C. Project Inspector's responsibilities:
   1. Co-sign the Daily Force Account for Coating Work Form from the Contractor.
   2. Coordinate with the Coatings Inspector to discuss issues and status of the concrete repair work, including any QA/QC issues from the inspection of the concrete repair work.

D. Coating Inspector's Responsibilities:
   1. Document the grouting subcontractor's work and quality control of the grouting installation.
   2. Coordinate with the Contractor to perform the initial inspection of the prepared concrete surfaces to identify areas needing concrete repair,
   3. Confirm that the concrete substrate to be repaired is sound and has been prepared to a minimum standard of SSPC-SP13.
   4. Document repair procedures planned for areas where reinforcement is exposed, or where the depth of repair will require multiple lifts of concrete mortar.
   5. Observe the mixing and application of the concrete mortar.
   6. Perform follow-up inspections and document completed areas.

PART 2 PRODUCTS

2.01 CONCRETE MORTAR

A. Concrete Mortar:
   1. Tnemec MortarClad Series 218
   2. Sauereisen RestoKrete No. 208
   3. General Polymers (Sherwin Williams) TPM#723 Vertical Repair Mortar
   4. Raven 750
   5. Or approved equal.

B. Primer for Exposed Reinforcement:
   1. Tnemec Hi-Build Epoxoline II N69
   2. Sauereisen ConoWeld No.501
   3. Sherwin Williams Co-Poxy Shop Primer
   4. Raven 130
   5. Or approved equal.

PART 3 EXECUTION

3.01 CONCRETE REPAIR

A. Concrete Removal: Remove all loose and unsound concrete per ICRI Guideline 310.1R "Guide for Surface Preparation."
   1. Chip out all unsound concrete (defined as being able to be removed with a light blow with a hammer) and remove all loose material.
   2. Unsound concrete surface areas shall have perimeter boundaries saw-cut to minimum depth of 1/2-inch. Saw cuts shall be perpendicular to the concrete surface.
   3. All concrete shall be removed from within the repair boundary to a minimum of 1/2-inch.
   4. Provide concrete surface to meet mortar manufacturer's recommendations. At a minimum, all concrete surfaces shall meet SSPC SP-13 (ICRI CSP5) prior to application of any primer or concrete mortar.

B. Repair Mortar Application
   1. Mix all components of the concrete mortar per the Manufacturer's recommendations.
   2. Do not exceed the Manufacturer's recommended depth of each lift.
   3. Cure the repaired area in accordance with the Manufacturer's recommendations.

3.02 EXPOSED REINFORCEMENT

A. Preparing Reinforcing Steel:
   1. Exposed reinforcing steel shall be prepared per ICRI Guideline 310.1R, "Guide for Surface Preparation."
   2. Where 1/2-inch or more of diameter of reinforcing steel is exposed either by existing conditions or concrete removal, the concrete shall be removed to provide a minimum 3/4-inch clearance around entire perimeter of steel and along the exposed length of the reinforcement.
   3. Clean reinforcement per SSPC SP-10 (Near White Metal Blast Cleaning).
   4. Prime the reinforcement with the specified primer.
   5. Provide sufficient cure time for the primer prior to embedment in the repair mortar.

3.03 MISCELLANEOUS REPAIRS

A. Miscellaneous repairs include the repair of items found during the inspection of the wetwell following coating removal and surface preparation to:
   1. Remove miscellaneous abandoned supports, connections, anchor bolts, etc., and patch, and repair as necessary.
      a. An example would be the removal of abandoned conduit support brackets in the valve vaults at PS-5 and PS-6. The brackets are to be removed and the anchor bolts are to be cut-off and ground down ½" below the surface of the concrete.
   2. Provide proper support and anchoring of equipment to the concrete walls, floors, or ceiling.
      a. The repair of the lower support of the FRP ladder in the PS-6 wetwell is an example of a miscellaneous repair to be completed under this specification.
      b. The repairs are to be in accordance with the equipment manufacturer's recommendations.
   3. The Contractor is to coordinate with the Coatings Inspector to identify miscellaneous repairs that are needed, and the procedures to be followed to make the repair.

END OF SECTION

SECTION 06630

FIBERGLASS REINFORCED PLASTIC (FRP) LADDERS

PART 1 GENERAL

1.01 SUMMARY

A. This Section specifies fiberglass reinforced plastic (FRP) ladders.

1.02 QUALITY ASSURANCE

A. Referenced Standards: This Section incorporates by reference the latest revision of the following documents. These references are part of this Section as specified and modified. In case of conflict between the requirements of this Section and those of the listed documents, the requirements of this Section shall prevail.

Reference	Title
ANSI A14.3	Ladders – Fixed – Safety Requirements
ASTM C883	Standard Test Method for Effective Shrinkage of Epoxy-Resin Systems Used With Concrete
ASTM D883	Terminology Relating to Plastics
ASTM E84	Test Method for Surface Burning Characteristics of Building Materials National Bureau of Custom Contact-Molded Reinforced-Polyester Chemical-Resistant Standard Voluntary Process Equipment Standards PS 15-6
NFPA 30	Flammable and Combustible Liquids Code

1.03 SUBMITTALS

A. Procedures: Section 01300.

B. Manufacturer's technical data and specifications for design, materials, fabrication, assembly, and installation.
   1. Catalog cuts of hardware, anchors, fastenings, and accessories.

C. Shop drawings for fabrication and erection of all assemblies. Show all anchorage and accessory items and finishes. Include setting drawings, templates, and instructions for installation of anchorage devices built into other work.

1.04 DEFINITIONS

A. All terminology relating to plastics in this Section shall be per ASTM C883.

1.05 PERFORMANCE AND DESIGN REQUIREMENTS

A. Corrosion Resistance: Suitable for continuous service under the following conditions:

Service	Concentration by Weight, %	Maximum Temperature, ºF
Chlorine gas (a)	10	100
Chlorine solution	Saturated	100
Hydrogen sulfide (a)	5	100
Hypochlorite solution	5	100
Hypochlorous acid	10	100
Potassium permanganate	10	100
Sodium hydroxide	50	100
Sulfuric acid	10	100

(a) Wet or dry.

1.06 SITE CONDITIONS

A. Coordinate dimensions with structures prior to preparation of shop drawings and fabrication to ensure proper fitting of work. Take field measurements as required.

PART 2 PRODUCTS

2.01 ACCEPTABLE MANUFACTURER

A. Fibergrate Composite Structures Incorporated.

B. Strongwell, Inc.

C. Or Approved Equal.

2.02 LADDERS

A. Unless otherwise indicated, design in accordance with ANSI A14.3, OSHA, and Building Code requirements.

B. Ladders shall be designed to support a minimum 300 LB concentrated vertical load with 150 LB concentrated horizontal load without failure or permanent set.
   1. Maximum lateral deflection: Side rail span/300

C. Rungs: 1-inch square or diameter solid bar with skid-resistant surface on all sides.
   1. Uniform maximum spacing of 12 inches.
   2. Top rung level with top of platform.
   3. Rungs shall not extend beyond the outside face of the ladder side rail.

D. Rails:
   1. 2-inch square tube, minimum 0.156 inch thick.
   2. Minimum 1/2 x 2-1/2 inch, by length required, standoff brackets on each side rail with punched holes for 3/4-inch anchors.
   3. Maximum vertical spacing: 5 feet o.c.
   4. The side rails of through ladder extensions shall extend 42 inches above the top rung or landing and shall flare out on each side to provide a clearance of 24 inch between the rails.

E. Minimum distance from centerline of rungs to wall or obstruction shall be seven inches.

F. Machine bolts, nuts, washers, brackets, clips, and accessories: Type 304 stainless steel.

PART 3 EXECUTION

3.01 INSTALLATION

A. Installation shall be as recommended by the FRP ladder manufacturer.

B. All field fabricated cuts shall be coated with vinyl ester resin in accordance with the manufacturer's instructions.

END OF SECTION

SECTION 08310

ACCESS HATCHES

PART 1 GENERAL

1.01 SUMMARY

A. This Section specifies factory fabricated aluminum access hatches.

1.02 SUBMITTALS

A. Procedures: Section 01300.

B. Product technical data: Manufacturer's data.

C. Shop Drawings: Include profiles, accessories, location, and dimensions.

D. Structural calculations from access hatch manufacturer prepared, stamped, dated, and signed by a Professional Engineer licensed in the state of Washington verifying access hatches are designed for specified loads.

E. Operation and maintenance information: Section 01730.

PART 2 PRODUCTS

2.01 ACCEPTABLE MANUFACTURER

A. The BILCO Company.

B. LW Products.

C. Or Approved Equal.

2.02 PERFORMANCE REQUIREMENTS

A. Double leaf size as indicated in the Drawings.
   1. Hatches shall be lockable to prevent outside entry.
   2. Wetwell hatch shall have odor gaskets and debris gaskets.
   3. Vault hatch does not require the odor gaskets or debris gaskets.

B. Performance characteristics:
   1. Reinforced to support HS-20 load ratings (with a maximum deflection of 1/150th of the span).
   2. Operation shall be smooth and easy with controlled operation throughout the entire arc of opening and closing.
   3. Operation shall not be affected by temperature.
   4. Entire access hatch, including all hardware components, shall be corrosion resistant.

C. Cover: Minimum 1/4-inch thick aluminum diamond pattern.

D. Frame:
   1. Channel frame shall be minimum 1/4-inch extruded aluminum with bend down anchor tabs around the perimeter.
   2. Provide additional structural members to reinforce frame as required to provide effective operation of hatches designed for specified loads.
   3. Wetwell hatch frame is to be designed for odor gaskets and debris gaskets.

E. Hinges:
   1. Heavy forged aluminum hinges, each having a minimum 1/4-inch diameter Type 316 stainless steel pin and pivot so the cover does not protrude into the channel frame.

2. Shall be specifically designed for horizontal installation and shall be through-bolted to the cover with tamperproof Type 316 stainless steel lock bolts and shall be through-bolted to the frame with Type 316 stainless steel bolts and locknuts.

F. Drain Coupling: 1-1/2-inch drain coupling located in the indicated position in the channel frame.

G. Gaskets:
1. Odor gasket: continuous EPDM gasket mechanically attached to the frame to create an odor barrier around the entire perimeter of the cover.
2. Debris gasket: continuous EPDM gasket mechanically fastened to the perimeter of the frame to reduce the amount of dirt and debris that enters the drainage channel.

H. Lifting mechanisms:
1. Manufacturer shall provide the required number and size of compression spring operators enclosed in telescopic tubes to provide, smooth, easy, and controlled cover operation throughout the entire arc of opening and to act as a check in retarding downward motion of the cover when closing.
2. The upper tube shall be the outer tube to prevent accumulation of moisture, grit, and debris inside the lower tube assembly.
3. The lower tube shall interlock with a flanged support shoe fastened to a formed 1/4-inch gusset support plate.

I. A removable exterior turn/lift handle with a spring loaded ball detent shall be provided to open the cover and the latch release shall be protected by a flush, gasketed, removable screw plug.

J. Hardware:
1. Cover shall be equipped with a hold open arm which automatically locks the cover in the open position.
2. Cover shall be fitted with the required number and size of compression spring operators. Springs shall have an electrocoated acrylic finish.
3. Type 316 stainless steel snap lock with fixed handle shall be mounted on the underside of the cover.
4. Hardware: Type 316 stainless steel.

K. SST Safety Chain
1. All hatches are to be equipped with SST safety chain, to span from the top corners of one leaf to the top corners of the opposite leaf.

L. Finishes:
1. Factory finish: mill finish aluminum
2. Bituminous coating: apply to the exterior of the frame.

PART 3 EXECUTION

3.01 INSTALLATION

A. Comply with the construction documents, shop drawings, and manufacturer's installation instructions.

B. Route the access hatch frame drain as indicated in the Drawings.

END OF SECTION

SECTION 09900

COATING SYSTEMS

PART 1 GENERAL

1.01 SUMMARY

A. This Section specifies coatings and their surface preparation for field-applied coating systems.

B. Furnish all labor, equipment, including safety equipment, superintendence, materials, tools and incidentals necessary to prepare and coat the work as specified in this Section.

1.02 DEFINITIONS:

A. Coating systems: Includes surface preparation, required dry film thickness, and the number and application procedure of the prime and finish coatings. Systems are as specified at the end of this Section.

C. Dry film thickness (DFT): The thickness of a fully cured coating or coating system.

D. Wet film thickness (WFT): The thickness of a coating while wet.

E. Volatile organic content (VOC): The portion of the coating that is a compound of carbon, is photochemically reactive and evaporates during drying or curing, expressed in grams per liter or pound per gallon as defined in ASTM D3960.

F. Project Engineer: The project engineer from Tetra Tech Inc.

G. Coating Inspector: The NACE Certified inspector working for Tetra Tech Inc.

H. Daily Reports: The Coating Inspector's Daily Report will contain the results of the QA/QC inspections, a description of the work performed, equipment being utilized, substrate condition (moisture, temperature, profile etc.), ambient conditions (temperature, humidity, etc.), quantities of materials applied for each phase of the coating system application, coating thicknesses achieved, and curing procedures.

I. Hard to reach: Areas that may not be accessible with spray equipment but can be reached by brush, mitt or roller.

1.03 QUALITY ASSURANCE

A. Referenced Standards: This Section incorporates by reference the latest revision of the following document. It is a part of this Section as specified and modified. In case of conflict between the requirements of this Section and that of the listed document, the requirements of this Section shall prevail.

	Reference	Title
1.	ASTM D4263	Standard Test Method Indicating Moisture in the Concrete by the Plastic Sheet Method
2.	ASTM D4285	Standard Test Method for Indicating Oil or Water in Compressed Air
3.	ASTM D4417	Standard Test Method for Field Measurement of Surface Profile of Blast Cleaned Steel
4.	ASTM D4541	Standard Test Method for Pull-off Adhesion Strength of Coatings Using Portable Adhesion Testing
5.	ASTM D4787	Continuity Verification of Liquid or Sheet Linings Applied to Concrete Substrates
6.	ASTM D7234	Standard Test Method for Pull-off Strength of Coatings on Concrete Using Portable Pull-Off Adhesion Testers
7.	ASTM E329	Standard Recommended Practice for Inspection and Testing Agencies for Concrete, Steel and Bituminous

		Materials as Used in Construction
8.	ASTM E337	Standard Test Method for Measuring Humidity With a Psychrometer
9.	ICRI	International Concrete Repair Institute, Technical Guidelines
10.	MIL-A-22262A (SH)	Military Specification, Abrasive Blasting Media, Ship Hull Blast Clean
11.	NACE Standard RP-0188	Recommended Practice Low, High Voltage Electrical Inspection of Coatings, Discontinuity (Holiday) Testing of Protective Coatings.
12.	SSPC	Steel Structures Painting Council, Volume 1 - Good Painting Practices
13.	SSPC-QP1	Standard Procedure for Evaluating the Qualifications of Industrial / Marine Painting Contractors (Field Application to Complex Industrial and Marine Structures)
14.	SSPC-Paint Application-PA-2	Measurement of Dry Paint Thickness with Type 2 Gauges
15.	SSPC-SP 1	Solvent Cleaning
16.	SSPC-SP 2	Hand Tool Cleaning
17.	SSPC-SP 3	Power Tool Cleaning
18.	SSPC-SP 5	White Metal Blast Cleaning
19.	SSPC-SP 6	Commercial Blast Cleaning
20.	SSPC-SP 7	Brush-Off Blast Cleaning
21.	SSPC-SP 11	Power Tool Cleaning to Bare Metal
22	SSPC-SP 13/NACE 6	Surface Preparation of Concrete
23.	SSPC - Guide 6	Guide for Containing Debris Generated During Paint Removal Operations
24.	SSPC - Guide 15	Field Methods for Retrieval and Analysis of Soluble Salts on Substrates
25.	SSPC Publication 91-12	Coating and Lining Inspection Manual

1.04 QUALITY ASSURANCE/QUALITY CONTROL (QA/QC) PLAN

A. General:
   1. The purpose of the QA/QC Plan is to verify that the work is being completed in accordance with the Contract Drawings and Specifications. The Contractor has the responsibility for conducting the testing noted in this section, and the Coating Inspector will conduct separate tests as noted to verify the Contractor’s test results, as well as perform other tests to verify that the coating systems are being applied as specified.
   2. Manufacturer's printed instructions: Deviations from the manufacturer's printed instructions will not be allowed unless approved in writing by the manufacturer's representative and the Project Engineer before execution of said change.
   3. Test result disagreement: In the event of a discrepancy between the Contractor and Coating Inspector’s testing equipment, both parties shall check equipment in question for proper function and calibration.
   4. Make available all locations and phases of the work for access for inspection by the Project Engineer, the Coating Inspector, or the manufacturer's representative. Contractor shall provide ventilation, egress, staging and whatever other means are required to access the work area.

B. Contractor's responsibilities:
   1. Quality control: Identify individual responsible for Contractor’s QA/QC program. The Contractor’s QA/QC program includes performing the tests necessary to ensure the proper application of the specified coatings. The Contractor is to coordinate with the Coating Inspector to allow the Coating Inspector to observe the Contractor’s tests, or to perform his own verification QA/QC inspections.
   2. Coordination: Coordinate with the Coating Inspector on a daily basis to discuss

construction activities, including tests to be performed.

3. Reports: Provide any information requested by the Coating Inspector for preparing the Daily Report.
4. Provide and utilize testing equipment as required to verify compliance with the Specifications. Record of equipment calibration must also be provided.
5. Schedule follow-up QA/QC inspections with the Coating Inspector following work to correct deficiencies noted during previous inspections.

C. QA/QC Tests: Contractor is responsible to perform the tests specified below and as required in the coating schedule. The Coating Inspector may perform any or all of the tests listed below to verify the results of the Contractor's tests.

1. Blotter test: Upon start up of abrasive blasting, compressed air shall be checked daily for oil and water by blotter test per ASTM D4285.
2. Anchor profile: Anchor profile of an abrasively blasted metal surface shall be tested using Testex tape per ASTM D4417. Test shall be conducted on the start-up of the blasting operation to insure proper selection of blast media and prior to prime coat application.
3. Intermediate DFT readings: DFT readings shall be taken between coats to check consistency of the application and progress toward total system thickness.
4. Final DFT readings: DFT readings shall be taken per SSPC-PA 2 on total system thickness as criteria for final acceptance of a coating. If recoat time has been exceeded or if recommended by the manufacturer, deficient areas shall be scarified prior to top coating.
5. Holiday testing: Perform after the epoxy mortar coating but prior to the finish coat of hi-build epoxy per ASTM D 4787 in the presence of the Coating Inspector. Any holidays detected shall be repaired and retested after cure of the coating is complete. Due to the system thickness, a high voltage holiday detector will be used based on 100 Volts per expected mil thickness.
6. Surface preparation: Shall be accepted by the Coating Inspector prior to the application of a coating.
7. Ambient conditions: Perform tests for relative humidity, surface temperature, dew point and ambient temperature to ensure compliance for materials applied.
8. Adhesion: If so directed by the City, perform adhesion tests on concrete surfaces per ASTM D7234, and on metal surfaces per ASTM D4541. These tests are performed on the completed coating systems. If the pull test demonstrates the coating has achieved the adhesive strength stated by the coating manufacturer, the City will pay for the repair of the tested area. The repair of failed areas is the responsibility of the Contractor.
9. Test to Determine Salt Contamination: Prior to sand blasting any concrete or metal surfaces, the Contractor shall take 3 random tests on the surface using the Bresle Method. The reading shall not exceed 30 microsiemens/cm (30 us/cm). If conductivity measurements exceed this value, the affected surfaces shall be cleaned until conductivity levels are acceptable.
10. Moisture in Concrete: Perform ASTM 4263-88, Standard Test Method Indicating Moisture in the Concrete by the Plastic Sheet Method. If the presence of moisture is indicated, dry the substrate prior to coating application using heaters, fans, or dehumidification equipment.

D. Disputes: If questions arise concerning the acceptability of an applied coating, Tooke, adhesion, and other destructive/non-destructive tests may be performed to aid in resolution of the dispute. If the coating is determined to be defective: the Contractor will be responsible for the cost of repairs resulting from testing. If the coating is shown to be properly applied, the City will be responsible for the cost of inspection repairs.

1.05 SUBMITTALS

A. Procedures: Section 01300.

B. Copy of SSPC Certification that the Painting Contractor meets SSPC-QP1

C. Qualifications of the individual responsible for the Contractor's QA/QC program. Provide at least

three previous projects that the individual has been responsible for that involved the application of epoxy-based coatings to concrete and metal surfaces. Provide the approximate size of the project, and contact information for the Owner's representative or the Owner's engineer.

D. For each type of coating, provide the following manufacturer's information:
   1. Surface preparation recommendations.
   2. Primer type, where required.
   3. Maximum dry and wet mil thickness per coat.
   4. Minimum and maximum curing time between coats, including atmospheric conditions for each.
   5. Curing time before submergence in liquid.
   6. Thinner to be used with each coating.
   7. Ventilation requirements.
   8. Allowable application methods.
   9. Maximum storage life.
   10. Material safety data sheets.
   11. Interpretation of batch code numbers.
   12. Minimum and maximum relative humidity requirements.
   13. Minimum and maximum surface temperature requirements.
   14. Minimum and maximum ambient temperature requirements.
   15. Manufacturer's recommended application procedure.

E. The top coat for the concrete and metal surfaces shall be a tan color to match as closely as possible the color of the existing polyurea coating in the valve vault. Provide a color chart or paint chip for the requested color.

F. Provide information on the equipment to be used to prepare the surface of the concrete and metal surfaces (high pressure water jetting and sand blasting equipment). Information is to include capacity, horsepower, pressure, etc.

1.06 DELIVERY, STORAGE AND HANDLING

A. Deliver materials for field application to the job site in their original, unopened containers. Each container shall bear the manufacturer's name brand, batch number, date of manufacture, and storage life.

B. Coatings shall be stored in enclosed structures and shall be protected from weather and excessive heat or cold. Coatings exceeding storage life recommended by the manufacturer or that have been visibly damaged shall be removed from the site. Flammable materials shall be stored in accordance with state and local codes.

1.07 SITE CONDITIONS

A. Coatings shall be applied only to surfaces that are dry, and only under such combination of humidity and temperatures of the atmosphere and surfaces to be coated as will cause evaporation rather than condensation.

B. During coating and for a period of at least 8 hours after the coating has been applied, the temperature of the surface and the atmosphere shall be maintained at a minimum of 5 degrees above the dew point.

C. Provide environmental controls such as heaters and/or dehumidification if specified atmospheric requirements are not met or workdays are lost due to weather.

D. Supply ventilation if the cure time of the coating is slowed by the presence of coating or solvent vapor.

PART 2 PRODUCTS

2.01 MATERIALS

A. Standardization:
   1. Materials, supplies, and articles provided shall be the standard products of manufacturers. Coatings in a particular system shall be the products of a single manufacture.
   2. Coating materials are specified under each coating system (at the end of this specification).

B. Blasting material shall meet MIL-A-22262A(SH) and shall be arsenic-free and contain no free silica. Blasting material shall not be reused. The Contractor is responsible for removing and legally disposing of the spent blasting material from the job site.

PART 3 EXECUTION

3.01 FORCE ACCOUNT

A. The City intends to perform portions of the work included in this project under Force Account, as this work cannot be accurately estimated in the design phase. This work is collectively referred to as Force Account for Coating Work, and includes the following:
   1. Chemical Injection Grouting (Section 02658)
   2. Concrete Repair (Section 03700)

B. Force Account for Coating Work discussed in the following sections is shown in italicized font.

3.02 INITIAL CLEANING

A. The wetwell, including the ductile iron pipe, the grating, and the grating supports shall be cleaned prior to any removal of the existing coating. All grease and oils shall be cleaned from these surfaces to limit potential transfer of these pollutants to the underlying concrete during the removal of the existing coatings.

B. The valve and meter vaults shall also be cleaned.
   1. Remove the check valves on the discharge of the vault drain lines in the wetwell prior to cleaning the vaults (to improve the drainage flow from the vaults). These valves are to be disposed of by the Contractor. Confirm that the drains from the valve and meter vaults to the wetwell are free-flowing and unobstructed.
   2. Mask off electrical equipment, sensors, gages, and other sensitive equipment prior to cleaning.

3.03 PREPARATION OF CONCRETE SURFACES

A. Removal of Existing Coating:
   1. Following cleaning, the existing polyurea coating shall be removed from the wetwells (walls, floors, ceilings), and disposed of in accordance with the Pierce County Solid Waste Regulations.
   2. It is the Contractor's responsibility to include sufficient resources and time in the project schedule to remove the existing polyurea coating. Additional work beyond what the Contractor estimated for the removal of the existing polyurea coating in the wetwells shall not be considered the basis for a change order.

B. Solvent Cleaning:
   1. After the removal of the existing coating, the exposed concrete surfaces shall be pressure washed with a cleaning solution to clean any remaining contaminants from the concrete surface prior to abrasive blasting or grouting activities.
   2. Washing pressure is to be 5,000 psi minimum.
   3. The cleaning solution shall contain an organic solvent specifically designed for cleaning soluble salts from concrete and metal surfaces (Chlor-Rid or approved equal).
   4. Following the cleaning, coordinate with the Coating Inspector to perform the specified salt contamination test on the prepared surface.

C. Groundwater Leakage Inspection (Force Account for Coating Work):

1. Following cleaning, the wetwells (and areas of the vaults where the existing coating has been removed) shall be dried out with ventilation equipment.

2. The wetwell and vault areas shall then be inspected for areas showing groundwater leakage. The Coating Inspector and the Contractor's grouting subcontractor shall attend the inspection.

3. Procedures for correcting groundwater leakage are covered in Section 02658,Chemical Injection Grouting. All groundwater leakage areas shall be sealed prior to the application of any patching material or other coating to that area.

4. Patching and repairing of the concrete surfaces is permissible while the grouting is underway, or during the time period following the grouting to verify that the groundwater leakage areas have been sealed.

5. The wetwell shall be inspected by the Coating Inspector to verify that no further grouting work is necessary.

D. Concrete Surface Preparation:

1. The concrete surfaces shall be prepared per SSPC SP-13. The specified surface profile is to be achieved by abrasive blasting or high pressure water jetting.
2. High pressure water jetting shall be in accordance with ICRI guideline "High and Ultra High Pressure Water Jetting."
3. Surface profile to meet ICRI CSP-5 or higher.
4. All loose concrete shall be removed until sound concrete is exposed. A screwdriver or hammer shall be used to confirm the soundness of the concrete.
5. All remnants of the existing coating shall be removed.
6. Protect existing fiberglass grating and supports during abrasive blasting.
7. Dust control during abrasive blasting is required. Containment shall conform to SSPC Guide 6, Class 3 (exhaust air filtration required). Level of containment is to be sufficient to capture debris, contain dust, protect from adverse weather, and provide means to control ambient conditions.
8. Inspect the prepared concrete surface with the Coating Inspector following completion of the abrasive blasting or high pressure water jetting for the following:
   a. Verify the specified surface profile has been achieved.
   b. Identify and document concrete areas requiring repair.

E. Concrete Repair (Force Account for Coating Work):

1. Concrete repair is defined as the filling of depressions of ½-inch or deeper.

2. The specified concrete mortar shall be used to repair concrete surfaces.

3. See Section 03700 for further details on concrete repair.

F. Patching Concrete:

1. Depressions in the concrete less than ½-inch deep are to be patched with the specified filler/surfacer.
2. Follow manufacturer's instructions for application. Achieve the recommended moisture levels on the concrete surface (without exceeding moisture levels) prior to patching.
3. Fill depressions to be flush with the plane of the surface.

3.04 PREPARATION OF METAL SURFACES

A. Ferrous Metallic surfaces:

1. All metal surfaces shall be solvent cleaned per SSPC SP-1.
2. The salt contamination test shall be conducted as specified on metal surface prior to abrasive blasting.
3. Existing metallic surfaces in the wetwell, valve vault, and meter vault shall be prepared as follows:
   a. Areas where the pipe is rusted or the existing coating is not tightly adhered shall be abrasive blasted in accordance with SSPC-SP 5 (White metal blast cleaning).
   b. Any ductile iron pipe having a factory asphaltic coating shall be abrasive blasted in

accordance with SSPC-SP 5.

c. Existing pipe coatings that are tightly adhered are to be brush-off blast cleaned per SSPC-SP 7 to provide a minimum surface profile of 2 mils.

4. Coordinate with the Coating Inspector to verify profile of blasted surface.
5. All metal shall be given the prime coat within 4 hours of the abrasive blast.

B. Patching:
1. Following the priming of heavily corroded ductile iron pipe, corrosion pits on metal surfaces shall be filled with the specified filler/surfacer material.
2. The specified filler/surfacer material shall also be used to fill sharp angles.

C. Gavanized Metal Surfaces:
1. Solvent cleaned per SSPC-SP 1.
2. Brush-off blast cleaned per SSPC-SP 7.
3. Prime coat within 4 hours of blasting.

3.05 CONCRETE COATING APPLICATION

A. General:
1. Follow the manufacturer's instructions to ensure recommended surface and air temperatures and humidity conditions are maintained during the coating and curing process. Dehumidification equipment may be required to maintain manufacturer's recommended conditions.
2. Component mixing procedures, coating application equipment, and application procedures shall follow the manufacturer's recommendations.
3. Coating shall be installed in accordance with the requirements of SSPC, Good Painting Practice, Volume 1.
4. Coated surfaces shall be free from runs, drips, ridges, waves, laps and brush marks. Coats shall be applied so as to produce an even film of uniform thickness.
5. Only full kits shall be used.

B. Filling/Surfacing:
1, Apply filler/surfacer as specified for the concrete coating system selected (System A-3a, Fiber Reinforced Epoxy, or System A-3b, Polyurethane) to smooth out any remaining irregularities in the concrete surface (i.e., a skim coat).
2. The filler/surfacer shall be applied to all concrete surfaces to be coated at a minimum thickness of 1/16-inch flush to plane.
3. Follow manufacturer's instructions for application.
4. Protect the saw-cut grooves for terminating the new coating when applying the filler/surfacer.

C. Fiber Reinforced Epoxy (System A-3a):
1. The fiber reinforced epoxy coating shall be spray-applied to the concrete surface using the spray equipment recommended by the coating manufacturer.
2. Do not thin.
4. Coordinate with the Coating Inspector to verify the workmanship and specified dry mil thickness of the fiber reinforced epoxy applied.
5. Perform holiday testing on the fiber reinforced epoxy coating per ASTM D4787 in the presence of the Coating Inspector. All holidays are to be repaired.

D. Alternative Polyurethane Coating (System A-3b):
1. A polyurethane coating system is an alternative to the fiber reinforced epoxy system.
2 Manufacturer approved heated plural component spray equipment shall be used.
3. Temperature of the surface of the concrete shall be maintained between 70 deg F to 110 deg F.
4. Do not thin.
5. Follow the manufacturer's instructions for maximum time for recoating, if more than one coat of polyurethane is required to achieve the specified DFT.

E. Top Coat:
   1. The fiber reinforced epoxy coating shall have cured per the manufacturer’s instructions prior to the application of the top coat.
   2. Coordinate with the Coating Inspector to verify the dry film thickness of the top coat.

3.06 METAL COATING APPLICATION

A. General:
   1. The same requirements apply regarding control of environmental conditions, mixing and application procedures, workmanship, etc. as discussed for the concrete coating application.
   2. Coordinate with the Coating Inspector to verify that the existing metal surfaces in the wetwells and vaults have been prepared as specified.
   3. Coordinate with the Coating Inspector to verify the specified dry mil thickness for the prime coat for the metal surfaces in the wetwells and vaults (applied immediately after the completion of abrasive blasting).
   4. A stripe coat shall be applied by brush to all edges, crevices, projections, nuts, bolts, pits, welds, and flanges. Subsequent coats may be either brush or spray applied.

B. Coating Application
   1. Follow the manufacturer’s recommendations concerning environmental conditions during the application and curing of the epoxy coating on the primed metal surfaces.
   2. Wetwell Piping (System A-1):
      a. An intermediate and top coat is to be applied to the primed metal piping in the wetwell.
   3. Vault Piping (System A-2):
      a. A top coat is to be applied to the primed metal piping in the vaults.
   4. Coordinate with the Coating Inspector to verify the specified dry mil thickness for all coats.

3.07 CLEANUP AND WASTE DISPOSAL

A. At the end of each shift, remove surplus materials, protective coverings, and accumulated rubbish.

B. Thoroughly clean all surfaces and repair any overspray or other paint-related damage when the work is complete.

C. All solvents, unused coatings and cleaning solutions shall be removed from the site and disposed of legally when coating work is complete.

3.08 MANUFACTURER'S SERVICES

A. Coating manufacturer's representative shall be present at each pump station site as follows:
   1. On first day of application of any coating system.
   2. A minimum of two additional site inspection visits, each for a minimum of 1 hour, in order to provide Manufacturer's Certificate of Proper Cure.
   3. As required to resolve field problems attributable to or associated with manufacturer's product.

3.09 COATING SCHEDULE

A. Coating Systems specified for use appear on the following pages.

Coating System:	A-1 (Ferrous Metals, in Wetwell)
Coating Material:	High Build Epoxy
Surfaces:	Metal
Service Condition:	Immersed, non-potable, corrosive environment.
Surface Preparation:	
Ferrous Metal:	See Part 3, Execution, “Preparation of Metal Surfaces”
Non-Ferrous and Galvanized Metal:	See Part 3, Execution, “Preparation of Metal Surfaces”
Coating Inspector QA/QC Inspections:	See Section “Quality Assurance/Quality Control (QA/QC) Plan.”
Coating Application:	
Coating Inspector QA/QC Inspections:	See Section “Quality Assurance/Quality Control (QA/QC) Plan.”
System Thickness:	45 mils DFT.
Coatings:	
Sauereisen	
Primer:	Conoweld No. 501 (5 mils DFT)
Patching:	Filler Compound No. 209 (as required for filling pits and transitioning sharp edges)
Stripe Coat:	Sewergard Glaze No. 210G
Intermediate:	Sewergard Glaze No. 210G (20 mils DFT)
Finish:	Sewergard Glaze No. 210G (20 mils DFT)
Tnemec	
Primer:	Hi-Build Epoxoline II N69 (5 mils DFT)
Patching:	Surfacing Epoxy Series 215 (as required for filling pits and transitioning sharp edges)
Stripe Coat	Perma-Glaze Series 435
Intermediate:	Perma-Glaze Series 435 (20 mils DFT)
Finish:	Perma-Glaze Series 435 (20 mils DFT)
Sherwin Williams	
Primer:	Co-Poxy Shop Primer (5 mils DFT)
Patching:	Steel-Seam FT910 (as required for filling pits and transitioning sharp edges)
Stripe Coat	Sher-Glass FF
Intermediate:	Sher-Glass FF (20 mils DFT)
Finish:	Sher-Glass FF (20 mils DFT)
Raven	
Primer:	Raven 130 (5 mils DFT)
Patching:	Per manufacturer’s recommendations (as required for filling pits and transitioning sharp edges)
Stripe Coat	Raven 405
Intermediate:	Raven 405 (20 mils DFT)
Finish:	Raven 405 (20 mils DFT)

Coating System:	A-2 (Metals, in Vaults)
Coating Material:	High Build Epoxy
Surfaces:	Metal
Service Condition:	Immersed, non-potable, corrosive environment.
Surface Preparation:	
Ferrous Metal:	See Part 3, Execution, “Preparation of Metal Surfaces”
Non-Ferrous and Galvanized Metal:	See Part 3, Execution, “Preparation of Metal Surfaces”
Coating Inspector QA/QC Inspections:	See Section “Quality Assurance/Quality Control (QA/QC) Plan.”
Coating Application:	
Coating Inspector QA/QC Inspections:	See Section “Quality Assurance/Quality Control (QA/QC) Plan.”
System Thickness:	25 mils DFT.
Coatings:	
Sauereisen	
Primer:	Conoweld No. 501 (5 mils DFT)
Stripe Coat:	Sewergard Glaze No. 210
Finish:	Sewergard Glaze No. 210 (20 mils DFT)
Tnemec	
Primer:	Hi-Build Epoxoline II N69 (5 mils DFT)
Stripe Coat	Perma-Glaze Series 435
Finish:	Perma-Glaze Series 435 (20 mils DFT)
Sherwin Williams	
Primer:	Co-Poxy Shop Primer (5 mils DFT)
Stripe Coat	Sher-Glass FF
Finish:	Sher-Glass FF (20 mils DFT)
Raven	
Primer:	Raven 130 (5 mils DFT)
Stripe Coat	Raven 405
Finish:	Raven 405 (20 mils DFT)

Coating System:	A-3a (Fiber Reinforced Epoxy Coating for Concrete)
Coating Material:	Fiber Reinforced Epoxy.
Surfaces:	Concrete
Service Condition:	Immersed, non-potable, corrosive environment.
Surface Preparation:	
For concrete:	See Part 3, Execution, “Preparation of Concrete Surfaces”
Coating Inspector QA/QC Inspections:	See Section “Quality Assurance/Quality Control (QA/QC) Plan.”
Coating Application:	
Coating Inspector QA/QC Inspections:	See Section “Quality Assurance/Quality Control (QA/QC) Plan.”
System Thickness:	207 mils DFT (Includes skim coat of filler/surfacer)
Coatings:	
Sauereisen	
Concrete Mortar	See Section 03700, Concrete Repair
Patching	Resurfacing Compound No. F-121 (single lift, < ½-inch depth, flush to surface)
Filler/surfacer	Resurfacing Compound No. F-121 (1/16-inch)
Fiber Reinforced Epoxy:	Sewergard Sprayable No. 210S (125 mils DFT).
Finish:	Sewergard Glaze No. 210 (20 mils DFT)
Tnemec	
Concrete Mortar	See Section 03700, Concrete Repair
Patching	Mortar clad Series 218 (single lift, < ½-inch depth, flush to surface)
Filler/surfacer:	Mortar clad Series 218 (1/16-inch)
Fiber Reinforced Epoxy:	Perma-Shield FR Series 436 (125 mils DFT).
Finish:	Perma-Glaze Series 435 (20 mils DFT).
Sherwin Williams	
Concrete Mortar	See Section 03700, Concrete Repair
Patching:	Corobond 300 (single lift, < ½-inch depth, flush to surface).
Filler/surfacer	Corobond 300 (1/16-inch)
Fiber Reinforced Epoxy:	Cor-Cote FRE (125 mils DFT).
Finish:	Cor-Cote SC (20 mils DFT).
Raven Lining Systems	
Concrete Mortar	See Section 03700, Concrete Repair
Patching:	Sika Top 123 (single lift, < ½-inch depth, flush to surface).
Filler/surfacer	Sika Top 123 (1/8-inch)
Primer:	Raven 155
Ultra High Build Epoxy:	Raven 405 (145 mils DFT)

Coating System:	A-3b (Alternative Polyurethane Coating for Concrete).
Coating Material:	Polyurethane.
Surfaces:	Concrete
Service Condition:	Immersed, non-potable, corrosive environment.
Surface Preparation:	
For concrete:	See Part 3, Execution, “Preparation of Concrete Surfaces”
Coating Inspector QA/QC Inspections:	See Section “Quality Assurance/Quality Control (QA/QC) Plan.”
Coating Application:	
Coating Inspector QA/QC Inspections:	See Section “Quality Assurance/Quality Control (QA/QC) Plan.”
System Thickness:	282 mils DFT (Includes skim coat of filler/surfacer)
Coatings:	
Spraywall:	
Concrete Mortar	See Section 03700, Concrete Repair
Patching	Speed Crete Red Line (single lift, < ½-inch depth, flush to surface)
Filler/surfacer:	Speed Crete Red Line (1/16-inch)
Polyurethane:	Spraywall (220 mils DFT).
Tnemec:	
Concrete Mortar	See Section 03700, Concrete Repair
Patching	Mortar clad Series 218 (single lift, < ½-inch depth, flush to surface)
Filler/surfacer:	Mortar clad Series 218 (1/16-inch)
Primer:	Pota-Pox Plus Series N140 (5 mils DFT)
Polyurethane:	Elasto-Shield Series 406 (215 mils DFT)

Coating Systems Identification:	B-1
Coating Material:	Epoxy primer, polyurethane finish, color required.
Surface:	Metal and PVC
Service Condition:	Non-immersed, exposure to moisture and sunlight, color required.
Surface Preparation:	
Ferrous Metal:	1. SSPC SP-6. 2. Shop primed surfaces which are to be incorporated in the work shall be prepared in the field by cleaning all surfaces in accordance with SSPC SP-2. Damaged shop coated areas shall be cleaned in accordance with SSPC SP-11 and recoated with the primer specified. Previously-coated surfaces shall be feathered in at the edges. 3. Shop primed surfaces shall receive light abrasive blasting prior to application of finish coats.
Nonferrous and Galvanized Metal:	Solvent clean per SSPC SP-1. Brush-off blast clean per SSPC SP-7. Prime coat within 4 hours of blasting.
PVC	Solvent clean per SSPC SP-1. Sandpaper to roughen surface.
Coating Application:	
Coating Inspector QA/QC Inspections:	See Section “Quality Assurance/Quality Control (QA/QC) Plan.”
System Thickness:	8-9 mils DFT.
Coatings:	
Devoe	
Primer:	Bar Rust 233H Low VOC Epoxy (4 mils DFT).
Finish:	Devthane 379H UVA Low VOC HS Polyurethane (4 mils DFT).
Sherwin Williams	
Primer:	Macropoxy 646-100 (4 mils DFT).
Finish:	Hi-Solids Polyurethane 100 (4 mils DFT).
Tnemec	
Primer:	Hi-Build Epoxoline II N69 (5 mils DFT).
Finish:	Series 750 Endura-Shield (4 mils DFT).

Coating System:	C-1 (Damproofing)
Coating Material:	Epoxy
Surfaces:	Concrete (Buried)
Service Condition:	Immersed, non-potable, corrosive environment.
Surface Preparation:	
For concrete:	SSPC SP-13.
Coating Inspector QA/QC Inspections:	See Section “Quality Assurance/Quality Control (QA/QC) Plan.”
Coating Application:	
Coating Inspector QA/QC Inspections:	See Section “Quality Assurance/Quality Control (QA/QC) Plan.”
System Thickness:	102 mils DFT (Includes skim coat of filler/surfacer)
Coatings:	
Sauereisen	
Filler/surfacer	Resurfacing Compound No. F-121 (1/16-inch)
Intermediate	Sewergard Glaze 210G (20 mils DFT).
Finish:	Sewergard Glaze No. 210G (20 mils DFT)
Tnemec	
Filler/surfacer	Mortar clad Series 218 (1/16-inch)
Intermediate	Epoxoline Series 141 (18 mils DFT).
Finish	Epoxoline Series 141 (18 mils DFT).
Sherwin Williams	
Filler/surfacer	Corobond 300 (1/16-inch)
Intermediate:	Cor-Cote SC (20 mils DFT).
Finish:	Cor-Cote SC (20 mils DFT).

END OF SECTION

SECTION 11324

SUBMERSIBLE PUMPS

PART 1 GENERAL

1.01 SUMMARY

A. This Section specifies submersible pumps for PS-10, including control system components.

1.02 QUALITY ASSURANCE

A. Referenced Standards: This Section incorporates by reference the latest revision of the following documents. It is a part of this Section as specified and modified. In case of conflict between the requirements of this Section and those of the listed documents, the requirements of this Section shall prevail.

Reference	Title
ASTM A276	Specification for Stainless Steel Bars and Shapes.
NEMA MG1	Motors and Generators
NEMA 250	Enclosures for Electrical Equipment (1,000 volts maximum).

1.03 SUBMITTALS

A. Procedures: Section 01300.

B. Manufacturer's complete product data including materials of construction, installation instructions, and equipment weight.

C. Control panel shop drawing

D. Predicted performance curves plotting head/capacity/efficiency and horsepower for the selected impeller diameter. Sphere size for solids capacity, suction, and discharge size, flange or compression gland connection.

E. Motor data showing rated hp, service factor, voltage, full load amperage and enclosure rating. Power cable rating and listing (UL approved, or ETL, CSA) for this service.

F. Shop drawings including dimensions and section views showing installation dimensions and concrete shaping as indicated in the Contract Drawings.
   1. Examine existing conditions in the PS-10 wetwell. Contractor is to field verify elevations and dimensions shown in the design, as these measurements were taken from the hatch level, and are approximate.
      a. Existing pipe spool elevation and dimensions.
      b. Depth of wetwell (existing, as well as proposed, if this is different)
      c. The shop drawing submittals for pump and piping installation shall reflect these Contractor-verified measurements.
   2. Include pump dimensions, motor dimensions, and base plate dimensions. Provide shop drawing details showing base plate anchor bolt layout, discharge connections, and special support bracket details as necessary for construction layout and assembly.
   3. Shop drawings shall show the discharge piping, fittings, and pipe supports that will be required to demonstrate a complete and operable pumping system.

G. Motor power and control wiring diagrams, including terminals and numbers.

H. Bearing service life

I. Operating and maintenance information per Section 01730.

J. Start-up and Field Testing:
   1. Copy of field log recording start-up and field testing procedures and results.
   2. Installation certification form.

1.04 PERFORMANCE REQUIREMENTS

A. General:
   1. The pump shall be a ESSCO Model 4 x 12 submersible vortex sewage pump (no substitutes).
   2. 25 ft. motor leads
   3. All electrical components to be explosion proof.
   4. 5-year warranty for the pump and motor

B. Operating Requirements:

PS-10	Min. Rated Capacity (gpm)	Rated Head (ft)	Min. Solids Size (inches)	Discharge Size (inches)	Max. RPM	Motor HP	Volts	Phase
Pump 1	250	18	4	4	1170	5	460	3
Pump 2	250	18	4	4	1170	5	460	3

C. The pump impeller is to be trimmed as required to meet the rated capacity. The pump is not to exceed the rated capacity by more than 10% at the rated head, due to the limited capacity of the gravity sewer downstream of the forcemain discharge.

1.05 LABELING

A. Electrical materials, devices, appliances, and equipment used shall be indicated as acceptable by the established standards of the Underwriters Laboratories Inc. or other electrical product testing laboratory which is accredited by the state of Washington Department of Labor and Industries. Indication shall be by a valid label affixed to the item.

PART 2 PRODUCTS

2.01 MATERIALS

A. Materials employed for the fabrication of the pumps shall be as follows:

Component	Material
Pump, Base Elbow	Cast Iron
Pump Impeller	Ductile Iron
Motor and pump shaft	416 or 316 Stainless Steel
Wear plate	Ni-hard
External bolts and nuts	304 Stainless Steel
Mechanical Seals	Double, silicone-carbide
Guide Rails, brackets, sliding flange	Stainless Steel

2.02 EQUIPMENT FEATURES

A. Motor:
   1. Reliance UL Listed, Explosion Proof
   2. 460V/3 phase/60 Hz
   3. Insulation: Class F.
   4. Thermal overload protection.
   5. Moisture sensing probes.
   6. 2-Part epoxy coating.

2.03 CONTROLS

A. Control Panel:
   1. The control panel shall be the pump supplier's standard ESSCO UL listed duplex control panel,

    a. Bubbler type with diaphragm air compressor.
    b. Per quote number JPFA-2013-09-06Essco.
    c. UL listed
    d. With the options and modifications noted below.

B. Modifications:
  1. Green Running lights in lieu of amber
  2. Hand/Off/LocalAuto/RemoteAuto selector switch in lieu of HOA selector switch. Local Auto works same as Auto on the standard HOA. Remote Auto transfers pump control to future scada/RTU panel.
  3. “Pump Fail” (see below) and float backup functions override both auto modes. Remote Auto mode overrides Local Auto alternation.
  4. “Pump Fail” circuitry for both pumps. Limit switches on check valves trip latching timing circuit if valves take too long to open when pump runs. Offending pump control circuit is disabled until manually reset at the control panel. Includes Pump Fail indicator lights, telemetry contacts, and reset buttons.

C. Standard Options:
  1. NEMA 3R enclosure
  2. High level alarm
  3. Float switch backup:
    a. Alternation not required.
    b. High float starts pump 1
    c. High High float starts pump 2.
    d. Low float stops both pumps.
    e. Mode resets automatically when pumps stop.
    f. Provide standard float switches.
  4. Legs for free standing panel or 60” tall floor mount panel.
  5. Pump sequence selection switch and functions.
    a. Select lead as 1,2, or alternating.
    b. Active in Local Auto mode only.
    c. Alternation occurs when pumps stop.
    d. Operation is Lead-Lag.
    e. Both pumps can run during high flow conditions.

D. Additional Options:
  1. 25,000 amps interrupting capacity circuit breakers, main and both pump circuits
  2. Integral Surge protection
  3. Intrinsically safe circuit connections for pump seal fail, pump motor winding over temperature, wet well float switches, and check valve limit switches.
  4. Pump 1 ammeter
  5. Pump 2 ammeter
  6. Thermostatically controlled panel heater and exhaust fans.
  7. Isolated 4-20 ma level signal output

E. Telemetry contacts:
  1. Pump 1 running
  2. Pump 2 running
  3. Pump 1 fail
  4. Pump 2 fail
  5. Pump 1 overload
  6. Pump 2 overload
  7. Pump 1 seal fail
  8. Pump 2 seal fail
  9. Pump 1 winding over temp
  10. Pump 2 winding over temp
  11. Pump 1 H/O/LA/RA in Hand
  12. Pump 1 H/O/LA/RA in Local Auto

13. Pump 1 H/O/LA/RA in Remote Auto
14. Pump 2 H/O/LA/RA in Hand
15. Pump 2 H/O/LA/RA in Local Auto
16. Pump 2 H/O/LA/RA in Remote Auto
17. Level is above LSH
18. Level is above LSHH
19. Level is below LSL

F. Other items:
   1. Cable support for the pump power and liquid level sensor cables.
      a. Plastic coated steel or stainless steel construction.
      b. Support for the level sensor cables shall be designed to permit easy individual level adjustment.

PART 3 EXECUTION

3.01 INSTALLATION

A. Install in accordance with manufacturer's instructions and as shown on the Drawings.

3.02 TESTING:

A. Field Testing:
   1. After completion of installation, field test for functional operation and demonstrate compliance with the performance requirements.
   2. Record start-up and field test results in the Manufacturer’s field log.
   3. Provide Manufacturer’s Installation Certification.

END OF SECTION

SECTION 11400

WETWELL AERATION/MIXING SYSTEM

PART 1 GENERAL

1.01 SUMMARY

A. This Section specifies the wetwell aeration/mixing system for PS-5 and PS-6.

1.02 SUBMITTALS

A. Procedures: Section 01300.

B. Product technical data for all the components specified herein.

C. Shop Drawings:
   1. Control Panel.
   2. Blower and enclosure.

D. Operation and maintenance information: Section 01730.

PART 2 PRODUCTS

2.01 ACCEPTABLE MANUFACTURER

A. DO2E Waste Water Treatment. LLC: Little John Digester Unit with Advanced Oxidation Processing (AOP).
   1. Local Distributor: Titus Industrial Group. (541) 948-4458

B. No Substitutes.

2.02 LITTLE JOHN DIGESTER UNIT

A. The system is to be packaged to include all local controls and accessories so that no specification sections are needed to specify the general characteristics of local control panels or accessories.

B. Blower
   1. Manufacturer: FPZ Inc MS Series Regenerative Blower
   2. 3 Hp, 460 V, 3 phase, 60 Hz. TEFC
   3. Control transformer rated at 480 VAC primary to power AOP ozone generator.
   4. Start / Stop controls to control motor magnetic starter (magnetic starter provided by others).
   5. Selector switch to control AOP ozone generator.
   6. AOP ozone generator.
   7. Heavy duty aluminum enclosure with built-in high airflow air filter assembly.
   8. Discharge outlet from cabinet:
      a. 17-inches above the base of the enclosure.
      b. Discharge outlet is to be a 2-inch diameter SST male NPT.

C. Mixer Unit
   1. Designed to create a high velocity flow and stationary cutting surfaces to break up solids and mix the contents of the wetwell.
   2. Designed to sit on the bottom of the wetwell and be retrievable by lifting the air supply pipe.
   3. Provide a stainless steel male adapter on the air connection at the top of the unit, to be compatible with the stainless steel female quick disconnect on the air supply pipe.

2.03 ACCESSORIES

A. Pressure Relief Valve.
   1. Manufacturer: FPZ Inc. Model VRL6.

2. Aluminum alloy construction.
3. 2-inch diameter.
4. Protect the blower from operating pressures exceeding 4.5 psi.

B. Flex Hose Connectors:
1. Manufacturer: Masterflex Single braid.
   a. Local Representative: Hose Master. (206) 762-3800
2. Stainless steel ASTM A240 T304L
3. Maximum Working Pressure:
   a. 3-inch diameter: 340 psi
4. Length to be as indicated in the Drawings.
5. Welded SST male NPT connections at both ends.
6. Provide threaded female SST quick disconnects on both ends
   a. Manufacturer: Pro-Flow Dynamics, or equal

PART 3 EXECUTION

3.01 INSTALLATION

A. Comply with the Contract Documents, shop drawings, and manufacturer's installation instructions.

B. Refer to the PS-5 and PS-6 electrical drawings for further information.

C. Locate all buried utilities prior to excavating for the installation of:
1. The electrical conduit from the electrical shed to the aeration blowers.
2. The PVC air lines from the aeration blowers to the entrances into the valve vault.

END OF SECTION

SECTION 15085

PIPING CONNECTIONS

PART 1 GENERAL

1.01 SUMMARY

A. This Section specifies the following:
   1. DIP mechanical joint bolted restraint.
   2. Restrained flange coupling adapters.
   3. Restrained sleeve-type couplings.
   4. Modular mechanical seals.

1.02 SUBMITTALS

A. Procedures: Section 01300

B. Manufacturer's catalog data.

C. Installation instructions for each type of piping connection.

PART 2 PRODUCTS

2.01 DIP MECHANICAL JOINT RESTRAINT

A. Bolted Restraint:
   1. Constructed of ASTM A536 Ductile Iron
   2. Restraint consist of multiple gripping wedges incorporated into a follower gland.
   3. Torque limiting twist-off nuts.
   4. Pressure rating of 350 psi
   5. Acceptable manufacturer:
      a. EBAA Iron Mega-Lug Series 1100.
      b. Or Approved Equal.

2.02 MECHANICAL COUPLINGS

A. Restrained Flanged Coupling Adapters:
   1. Constructed of ASTM A536 Ductile Iron
   2. Restraint consist of multiple gripping wedges with torque limiting actuating screws.
   3. Internal surfaces lined with fusion bonded epoxy.
   4. External surfaces coated with fusion bonded epoxy.
   5. Buried applications are to have 304 Stainless Steel bolts.
   6. Acceptable manufacturer:
      a. EBAA Iron Series 2100
      b. Or Approved Equal.

B. Restrained Sleeve-type Coupling:
   1. Constructed of ASTM A536 Ductile Iron
   2. Restraint consist of multiple gripping wedges.
   3. Torque limiting twist-off nuts.
   4. Internal surfaces lined with fusion bonded epoxy.
   5. External surfaces coated with fusion bonded epoxy.
   6. Buried applications are to have 304 Stainless Steel bolts.
   7. Acceptable manufacturer:
      a. EBAA Iron Mega-Coupling Series 3800.
      b. Or Approved Equal.

C. Ductile Iron Coupling:
   1. Meets AWWA C219 and Section 9-30.2(7) of the Standard Specification.
   2. Romac Industries Style 501 or approved equal.

2.03 MODULAR MECHANICAL SEAL

A. Materials:
   1. Interlocking EPDM rubber links
   2. Type 316 Stainless Steel bolts

B. Manufacturer:
   1. Thunderline Link Seal Model S-316.
   2. Or Approved Equal.

PART 3 EXECUTION

3.01 GENERAL

A. Install equipment in accordance with manufacturer's instructions and as shown on the Drawings.

3.02 MODULAR MECHANICAL SEALS

A. Size cored openings per the seal manufacturer’s recommendation.

END OF SECTION

SECTION 15100

MISCELLANEOUS MECHANICAL EQUIPMENT

PART 1 GENERAL

1.01 SUMMARY

A. This Section specifies miscellaneous mechanical equipment, including:
   1. Eccentric plug valves.
   2. Spring-operated swing check valves for water service.
   3. Wafer-style check valve for air service
   4. Combination Air Relief/Vacuum Release Valve (ARV).

1.02 QUALITY ASSURANCE

A. Referenced Standards: This Section incorporates by reference the latest revision of the following documents. These references are a part of this Section as specified and modified. In case of conflict between the requirements of this Section and those of the listed documents, the requirements of this Section shall prevail.

Reference	Title
ASME B16.1	Cast Iron Pipe Flanges and Flanged Fittings Class 25, 125, 250, and 800
ASME B16.10	Face-to Face and End-to-End Dimensions of Valves
ASTM A126	Gray Iron Castings for Valves, Flanges, and Pipe Fittings
ASTM A436	Austenitic Gray Iron Castings
ASTM A536	Ductile Iron Castings

1.03 SUBMITTALS

A. Procedures: Section 01300.

B. Manufacturer's product data, catalog cuts, and shop drawings detailing materials of fabrication, assembly, dimensions, and flow capacity.

C. Manufacturer's installation instructions.

D. Certified Cv value test results from an approved laboratory for all valve sizes.

E. Certified drawings for spherical solid passage.

1.04 DESIGN REQUIREMENTS

A. Pressure ratings: Unless otherwise indicated, valves shall be rated for a working pressure of 175 psi.

PART 2 PRODUCTS

2.01 PLUG VALVES

A. Materials:
   1. Body: Cast iron, ASTM A126, Class B, or ductile iron, ASTM A536
   2. Plug: Ductile iron, ASTM A536
   3. Plug facing: Neoprene or Buna-N
   4. Body seats: Welded-in overlay of not less than 90 percent nickel.
   5. Packing: Buna or TFE
   6. Bearings: Permanently lubricated (oil impregnated) stainless steel

B. General:
   1. Straight-flow non-lubricated resilient plug type suitable for driptight, bi-directional shutoff at the specified valve design pressure.
   2. Each valve body shall be plainly marked to indicate seat end.
   3. Port area:
      a. Unless otherwise indicated, port areas for valves shall be at least 80 percent of the adjacent full pipe area and shall be capable of passing spherical solids which are at least 85 percent of the pipe size for valves 14 inches and smaller.
      b. Port area shall be round for valve sizes 14 inches and smaller.
   4. Valve body seats consisting of nickel for valves 3 inches and larger shall be fabricated of a welded-in overlay of not less than 90 percent pure nickel.
   5. For valves 20 inches and smaller, upper and lower bearings shall be replaceable sleeve type, permanently lubricated stainless steel. Bronze bearings are not acceptable.
   6. Bearings shall be protected at both the top and bottom with PTFE grit seals.
   7. Shaft seals shall be self-adjusting chevron type packing, or "U" cup with "O" ring, replaceable without removing the plug.
   8. Plug valve manufacturers shall provide certified test results by verifying that the minimum Cv values specified below have been met for valves of the same model and size. Large plug valves shall have the following minimum Cv values:

Plug valve size	Cv value (minimum)
4-inch	1,160
6-inch	1,960

C. End Connections:
   1. Valve 3 inches and larger: Flanged, ASME B16.1, Class 125.

D. Lay Length:
   1. Flanged valves shall conform to ASME B16.10 Table 1, for short pattern Class 125 cast iron plug valves.

E. Manual Operators:
   1. Valves 4 inches and smaller: lever type manual operator.
   2. Valves larger than 4 inches: totally enclosed worm gear operator sized for bidirectional shutoff at design pressure in accordance with AWWA C504, Section 3.8.

F. Manufacturer:
   1. Dezurik PEF, 100% Port.
   2. Val-Matic, 100% Port.
   3. Or Approved Equal.

2.02 SWING CHECK VALVE (WATER)

A. Materials:
   1. Body and Cover: Cast Iron ASTM A126 Grade B.
   2. Disc arm and disc: Ductile Iron ASTM A536.
   3. Seat: Stainless Steel ASTM A276.
   4. Disc Seat: BUNA N.
   5. Cover Gasket: Composition.
   6. Shaft: Stainless Steel, Type 303 or 17-4 PH.
   7. Hinge Shaft Bearing: Bronze.
   8. Seat Pins and Lock Screws: Stainless Steel.
   9. Spring Tensioner: Stainless Steel.

B. General:
   1. Heavy cast iron body per AWWA C508 with flanged ends, stainless steel seat rings and shaft for attachment of spring.
   2. Valves 8 inches and larger shall be field convertible to counterweighted oil-cushioned style without the use of special tools.
   3. Provide tapped and plugged drain and vent holes in valve body and cover.

4. All internal components shall be field replaceable without use of special tools.

C. Valve Disk:
1. Double clevis mounted to arm
2. Suspended from non-corrosive shaft extending through both sides of the body.
3. O-ring type shaft seals.

D. Limit switches:
1. Designed to determine fully open to fully closed position, securely attached to check valve and lever arm as required to determine position.
2. Mechanism: heavy-duty snap action, over-the center switch contained in a die cast metallic NEMA 4 enclosure with chemical resistant Viton gaskets and seals.
3. Contain one normally open and one normally closed fine silver contacts rated NEMA A600, 120 VAC, 10 Amp continuous wiping action operation; replaceable contacts without disconnect of external wiring.
4. Wiring terminals: accommodate #22 - #12 stranded copper wire; identify on permanently attached nameplate.

E. Manufacturer:
1. APCO.
2. Clow/Kennedy.
3. Or Approved Equal

2.03 WAFER STYLE CHECK VALVE (AIR)

A. Materials:
1. Body and Discs: Aluminum ASTM B26
2. Fasteners and Spring Pins: 316 Stainless Steel
3. Spring: 316 Stainless Steel
4. Seals: Buna-N

B. General:
1. Operating Pressure Rating: 200 psi
2. Manufacturer's standard coating
3. Pressure loss for 3-inch dia: 0.17 psig @ 1,000 scfm
4. Manufacturer:
   a. U.S. Valve, LLC.
   b. Or approved equal.

2.04 COMBINATION AIR RELIEF/VACUUM RELEASE VALVE (ARV)

A. Materials:
1. Body and Cover:
   a. Cast Iron ASTM A126 Grade B.
   b. Ductile Iron ASTM A536 GR 65-45-12
2. Float: Stainless Steel ASTM A240 T304.
3. Stem: Stainless Steel Series T300.
4. Needle and Seat: Buna-N Nitrile Rubber
5. Plug (1"-4"): Brass ASTM B124

B. General
1. Large orifice for air in/out
2. Small orifice for air release under pressure.
3. Provide inlet shutoff valve.
4. Provide 5 ft flush hose with quick disconnect couplings

C. Manufacturer:
1. APCO Series 440 SCAV.
2. Or Approved Equal

2.05 GROUT

A. Description:
   1. ASTM C 1107, Grade B, nonshrinking, nongas-liberating, flowable hydraulic-cement grout.
   2. Characteristics: Post-hardening, volume-adjusting, nonstaining, noncorrosive, nongaseous, and recommended for interior and exterior applications.
   3. Design Mix: 9000-psi (34.5-MPa), 28-day compressive strength.
   4. Packaging: Premixed and factory packaged.

PART 3 EXECUTION

3.01 GENERAL

A. Install equipment in accordance with manufacturer's instructions and as shown on the Drawings.

B. Each valve, upon completion of installation of the piping system, shall be cycled to fully demonstrate proper operation.

3.02 PLUG VALVES

A. Install plug valves with seat on the upstream side of the valve.

END OF SECTION

SECTION 16000

GENERAL REQUIREMENTS FOR ELECTRICAL WORK

PART 1 GENERAL

1.01 SUMMARY

A. This Section specifies general requirements for electrical work. Detailed requirements for specific electrical items specified in other sections are subject to the requirements of this Section. The Electrical Drawings and Schedules included in the specification are functional in nature and do not specify exact locations of equipment or equipment terminations.

B. All electrical Work included in this Contract including pre-fabricated assemblies shall conform to the requirements of this Section unless specifically specified otherwise.

C. The guide specifications provided with the bid document set are general in scope and typically cover more topics and items than are included in each project. Applicable specification sections apply to and govern all components of the project.

1.02 QUALITY ASSURANCE

A. Referenced Standards: This Section incorporates by reference the latest revision of the following documents. These references are a part of this Section as specified and modified. In case of conflict between the requirements of this Section and those of the listed documents, the requirements of this Section shall prevail.

Reference	Title
ANSI A58.1	Minimum Design Loads for Buildings and Other Structures
NFPA 70	National Electrical Code (NEC) and local amendments
NEMA	National Electrical Manufacturers Association
ICEA	Insulated Cable Engineers Association
IBC / IBO	International Building Code
UL	Underwriters Laboratories

B. Identification of Listed Products:
   1. Electrical equipment and materials shall be listed and labeled for the purpose for which they are to be used, by UL or equivalent NRTL agency approved lab as the independent testing laboratory. Independent testing laboratory shall meet the requirements of the local or state inspection authority having jurisdiction.
   2. When a product is not available with a testing laboratory listing for the purpose for which it is to serve, the product may be required by the inspection authority to undergo a special inspection. All costs and expenses incurred for such inspections shall be included in the original contract price.
   3. When the product is an assemblage of individual parts, whether the individual parts are listed or not, the entire assemblage must be listed and labeled as a complete unit for the purpose for which it is to be used.

C. Factory Tests: Where specified in the specification section, perform factory tests at the place of fabrication. Perform on completion of manufacture or assembly.

1.03 SUBMITTALS

A. Procedures: Section 01300.

B. Electrical equipment layout drawings for power distribution equipment located under the weather cover with signed off coordination with General Contractor.
   1. Plan drawing showing all of the electrical equipment located under the weather cover.
   2. Elevation drawings showing all of the electrical equipment located under the weather cover.
   3. Drawings shall be signed off for approval by the General Contractor prior to final approval of the weather cover.

C. Catalog cuts of equipment, devices, and materials requested by the specification sections.
   1. Catalog information includes technical specifications and application information, including ratings, range, weight, accuracy, etc.
   2. Catalog cuts shall be edited to show only the items, model numbers, and information which apply to the submittal requirements.
   3. Catalog cuts shall be assembled in a folder. Each folder shall contain a cover sheet, indexed by item, and cross-referenced to the appropriate specification paragraph.

D. Product Data.

E. Interconnection diagrams depicting all cable requirements together with their actual terminations.

1.04 DEFINITIONS

A. Elementary or Schematic Diagram: A schematic (elementary) diagram shows, by means of graphic symbols, the electrical connections and functions of a specific circuit arrangement. The schematic diagram facilitates tracing the circuit and its functions without regard to the actual physical size, shape, or location of the component devices or parts.

B. One-Line Diagram: Shows by means of single lines and graphical symbols the course of an electrical circuit or system of circuits and the components, devices, or parts used therein. Physical relationships are usually disregarded.

C. Block Diagram: A diagram of a system, instrument, computer, or program in which selected portions are represented by annotated boxes and interconnecting lines.

D. Wiring Diagram or Connection System: A wiring or connection diagram includes all of the devices in a system and shows their physical relationship to each other including terminals and interconnecting wiring in an assembly. This diagram shall be (a) in a form showing interconnecting wiring only by terminal designation (wireless diagram), or (b) a panel layout diagram showing the physical location of devices plus the elementary diagram.

E. Interconnection Diagram:
   1. Show all external connections between terminals of equipment and outside points, such as motors and auxiliary devices.
   2. References shall be shown to all connection diagrams which interface to the interconnection diagrams.
   3. Interconnection diagrams shall be of the continuous line type.
   4. Bundled wires shall be shown as a single line with the direction of entry/exit of the individual wires clearly shown. Wireless diagrams and wire lists are not acceptable.
   5. Each wire identification as actually installed shall be shown.
   6. The wire identification for each end of the same wire shall be identical.
   7. All devices and equipment shall be identified.
   8. Terminal blocks shall be shown as actually installed and identified in the equipment complete with individual terminal identification.
   9. All jumpers, shielding and grounding termination details not shown on the equipment connection diagrams shall be shown on the interconnection diagrams.
   10. Wires or jumpers shown on the equipment connection diagrams shall not be shown again on the interconnection diagram.
   11. Signal and DC circuit polarities and wire pairs shall be shown.
   12. Spare wires and cables shall be shown.

F. Arrangement, Layout, or Outline Drawings: An arrangement, layout, or outline drawing is one which shows the physical space and mounting requirements of a piece of equipment. It may also indicate ventilation requirements and space provided for connections or the location to which connections are to be made.

1.05 DRAWINGS

A. Prepare drawings specified as part of the work.

B. Drawings shall be complete with borders and title blocks clearly identifying Contract name, equipment, and the scope of the drawing.

C. Drawing standard requirements will be supplied by the City.

1.06 SITE CONDITIONS

A. General: Unless otherwise indicated, size and derate equipment and materials for the expected ambient conditions, but not less than an ambient maximum temperature of 40 degrees C at an elevation ranging from sea level to 3000 feet without exceeding the manufacturer's stated tolerances.

B. Classified Areas:
   1. See plan drawings for hazardous area classifications.

C. Seismic:
   1. Electrical equipment and supports: Braced per IBC requirements.
   2. Provide calculations for overturning moment and design of the embedded anchors for securing free-standing equipment to the building structure.
   3. Fasten equipment that is front-accessible only to the wall or ceiling as well as the floor.

1.07 STORAGE OF MATERIALS AND EQUIPMENT

A. Store materials and equipment per manufacturer's recommendations.

B. Store indoor equipment and materials to be permanently located indoors and seal with plastic film wrap.

1.08 PS-10 ELECTRICAL POWER SERVICE

A. The existing 208 VAC 3 phase electrical service will be disconnected and a new 277/480 volt 3 phase service will be provided. The letter of agreement between Tacoma Power and the City dated 3/18/2014 with subject: "Service upgrade at Fife Pump Station #10; Located at 3949 Industrial Road, Fife, WA", defines the scope of work commitments of Tacoma Power and the responsibilities of the contractor. Compliance with this letter is mandatory. The letter includes by reference the referenced "one line diagram and work order", the referenced "Tacoma Power Drawings", and other referenced documents. The letter is available from the City. Standards are available on the Tacoma Power website (www.Tacomapower.com).

B. Refer to the letter for complete details of responsibilities. Tacoma Powers commitments include bulleted items under the heading "Tacoma Power Shall", on page 1 and 2 of the letter. A summary of Tacoma Power commitments is as follows:
   1. Supply and install 75 KVA transformer.
   2. Supply and install all 15 KV primary cables.
   3. Terminate all 15 KV cables.
   4. Supply and set permanent meter.
   5. Remove existing 120/208 volt pad mount transformer, cables, and pad.
   6. Cap existing 4" conduit at old transformer.
   7. Terminate Customers service wire in pad mounted transformer.

C. Refer to the letter for complete details of responsibilities. The contractor is responsible for items a. through q. which includes but is not limited to the following:
   1. All trenching for primary and secondary vaults and conduits. Standard C-UG-1300 applies.
   2. All primary and secondary conduits. Standard C-UG-1300 applies.
   3. Transformer vault. Standards C-UG-2000, A-UG-1200, C-UG-1400 and C-UG-1700 apply.
   4. Concrete junction box. Standards C-UG-2000, C-UG1100, and C-UG-1500 apply.
   5. Meter base per Tacoma Power standards. See Tacoma Power Electric Service Handbook chapter 13.

6. All required permits for electrical work.
7. Coordination with Tacoma Power and verification of all Tacoma Power requirements, standards, and inspections related to the work.

1.09 INDICATING LAMP COLORS

A. Unless otherwise specified, equipment to follow with colored lenses in accordance with the following schedule:

Color	Function	Example
Red	Run, open valve	Equipment operating, motor running
Green	Ready, closed valve	Equipment ready, end of cycle
White	Normal condition	Control power on, status OK or clear
Amber	Abnormal condition	Failure of equipment or status (yellow) abnormal, fault condition

PART 2 PRODUCTS

2.01 EQUIPMENT AND MATERIALS

A. General:
   1. Equipment and materials shall be new and free from defects.
   2. All material and equipment of the same or a similar type shall be of the same manufacturer throughout the work.
   3. Standard production materials shall be used wherever possible.

B. Equipment Finish: Unless otherwise indicated, electrical equipment and materials shall be painted by the manufacturer.

2.02 CONDUCTOR / WIRE MARKERS

A. Identify each power and control conductor at each end of each terminal to which it is connected.

B. Conductors size No. 10 AWG or smaller shall have identification sleeves.

C. Conductors:
   1. Identify each end as shown on the drawings
   2. If not shown on the drawings, identify conductor ends with the Equipment number, followed by -Cxx, where xx is a unique number for that wire.

D. Machine print on sleeves with permanent black ink the letters and numbers that identify each wire.

E. Figures: 1/8 inch high.

F. Sleeves: Yellow or white tubing, sized to fit the conductor insulation.

G. The sleeves shall be shrunk to fit the conductor with hot air after installation.

H. Acceptable Manufacturer:
   1. TMS Thermofit Marker System by Raychem Co.
   2. Sleeve style wire marking system by W. H. Brady Co.
   3. Approved equal.

I. Adhesive strips are not acceptable.

J. Use cable markers of the locking tab type for conductors No. 8 AWG and larger.

K. Tabs: white plastic with conductor identification number permanently embossed.

2.03 NAMEPLATES

A. Laminated phenolic plastic.

B. Nominal Size: 3/4 inch high by 2 inches long.

C. Black backgrounds with 3/16-inch white letters.

D. If abbreviations are required because of space limitations, submit to the Project Representative prior to manufacture.

E. Fastened using self-tapping stainless steel screws. The use of adhesives will not be permitted on the outside of enclosures.

2.04 TERMINAL BLOCKS

A. Unless otherwise indicated, panhead strap screw type.

B. Terminals shall be provided with integral marking strips which shall be permanently identified with the connecting wire numbers as shown on the Drawings.

C. Terminal blocks for P-circuits (power 208-600 volts): Rated not less than the conductor current rating and less than 600 VAC.

D. Terminal blocks for C-circuits (control and/or power 120 volts or less power) and S-circuits (signal): Rated not less than 20 amperes and less than 600 VAC.

E. Terminals: Tin-plated.

F. Insulating material: Nylon.

2.05 PRODUCT DATA

A. Applicable operation and maintenance information on an item-by-item basis. Operation and maintenance information shall be provided at the time of equipment, device, or material site delivery. Full-size drawings shall be reduced to 11 x 17 inches.

B. Test results for motors and electrical systems on appropriate industry standard forms. Maintain a file of the original test results and submit to the Project Representative prior to Final Acceptance.

C. Description of functional checkout procedures, specified in this specification, 30 days prior to performing functional checkout tests.

2.06 SURGE PROTECTION DEVICE

A. The surge protection device (SPD) basis of design is EATON - “SPD 120 480Y 3 Q” or approved equal and shall have the following characteristics:
   1. Designed and listed for outdoor installation and surge suppression for 480Y/277 VAC, 3 phase and 4-wire electrical service.
   2. Listed to UL 1449 3rd edition as a SPD.
   3. Minimum surge current capacity based on ANSI/IEEE C62.41: Type 1, Category A
   4. LED’s indicate operational status
   5. Enclosure NEMA Type 4X with internal disconnect
   6. Complies with NEC Article 285
   7. Per phase rating 120 kA
   8. Per mode rating 60 kA
   9. EMI/RFI filtering attenuation 50db
   10. Alarm contacts
   11. Surge counter

PART 3 EXECUTION

3.01 GENERAL

A. Construction:
   1. Unless otherwise indicated, electrical layout drawings are diagrammatic.
   2. Coordinate the location of electrical material or equipment with other equipment and work.
   3. Make necessary minor changes in location of electrical material or equipment to avoid interferences with other work prior to installation.

B. Housekeeping:
   1. Protect electrical equipment from dust, water and damage.
   2. Wipe electrical equipment, and buses free of dust and dirt on the outside, keep dry and vacuumed on the inside within 30 days of Substantial Completion.
   3. Touch up any scratches on equipment.
   4. During construction, allow no electrical equipment to be temporarily exposed to weather, debris, liquids, or damage.

C. Dust Free Areas:
   1. Protect electrical, instrumentation and control equipment from dust by wrapping the equipment in plastic film wrap until installed to prevent dust from entering the equipment.
   2. Once electrical, instrumentation and control equipment is installed, protect from dust. Rewrap the equipment if necessary to keep the equipment dust free.

3.02 RECORD DOCUMENTS

A. Provide record drawings. Include the following schedules, lists, and drawings:
   1. Interconnection diagrams.
   2. Original submittal drawings.

END OF SECTION

SECTION 16030

ELECTRICAL TESTING

PART 1 GENERAL

1.01 SUMMARY

A. This Section specifies the acceptance testing of electrical materials, equipment, and systems.

1.02 QUALITY ASSURANCE

A. Referenced Standards: This Section incorporates by reference the latest revision of the following document. These references are a part of this Section as specified and modified. In case of conflict between the requirements of this Section and that of the listed document, the requirements of this Section shall prevail.

Reference	Title
ANSI	American National Standards Institute
ICEA	Insulated Cable Engineers Association
NEMA	National Electrical Manufacturer's Association
NETA	InterNational Electrical Testing Association

1.03 SUBMITTALS

A. Procedures: Section 01300.

B. Draft Test Plan and Procedures in accordance with the latest NETA requirements, 90 days prior to initial functional checkout. Contractor shall use NETA Acceptance Testing Specifications for all new equipment installed under this contract and NETA Maintenance Testing Specifications for all existing equipment reused under this contract unless otherwise directed by the Project Representative.

C. Provide and Completed appropriate test report Forms

D. Functional checkout procedures 45 days prior to performing initial functional checkout tests

E. Final Test Report documenting test results and equipment and device settings.

F. Testing Contractor shall be NETA accredited and supply copy of accreditation as part of test plan submittal.

1.04 APPLICATION

A. Requirements for testing in accordance with this Section are specified in this and other sections of Division 16 and 17. Where testing in accordance with this Section is required, the required tests, including correction of defects and retesting, shall be completed prior to energization of material, equipment, or systems.

1.05 TEST EQUIPMENT AND MATERIALS

A. Test instruments shall be calibrated to references traceable to the National Institute of Standards and Testing Technology and shall have a current sticker showing date of calibration, deviation from standard, name of calibration laboratory and technician, and date of recalibration.

PART 2 PRODUCTS (NOT USED)

PART 3 EXECUTION

3.01 TESTING

A. General:
   1. Prior to energizing the electrical circuits, perform the following tests. Unless otherwise indicated, a 1,000 volt megohmmeter shall be used for resistance measurements.
   2. Record test measurements on appropriate Forms.

3. Submit a description of the proposed functional test procedures 45 days prior to the performance of functional checkout.

B. Insulation Resistance Measurements:
   1. General:
      a. Make general insulation resistance measurements on conductors and energized parts of electrical equipment.
      b. Unless otherwise indicated, minimum acceptable values of insulation resistance shall be in accordance with the applicable ANSI, ICEA, NEMA, or NETA standards for the equipment or material being tested.
      c. Record the ambient temperature at which insulation resistance is measured on the test form.
      d. Record insulation resistance measurements on an appropriate form.
      e. Insulation with resistance of less than 10 megohms is not acceptable.
      f. Document checks and measurements.

C. Conductor and cable tests:
   1. Measure phase-to-ground insulation resistance for all circuits 120 volts and above, except lighting circuits. Make measurements with motors and other equipment disconnected, except that solid state equipment shall be disconnected unless the equipment is normally tested by the manufacturer at voltages in excess of 1000 volts DC.

D. Motor Tests:
   1. Complete an appropriate motor test form for each motor after installation.
   2. Measure insulation resistance for all motors before being connected.
   3. Insulation resistance values less than 10 megohms are not acceptable.
   4. Verify motor phase rotation.
   5. Verification may be accomplished by momentarily energizing the motor, provided the Contractor confirms that neither the motor nor the driven equipment will be damaged by reverse operation.
   6. Measure current on each phase with motor running at full load.

E. Distribution Equipment: Measure insulation resistance for transformers, panelboards, and other distribution equipment phase-to-phase and phase-to-ground.
   1. Functional Checkout:
      a. Perform functional testing in accordance with the manufacturer's requirements and the procedure provided in test plan and procedures.
      b. Prior to functional testing, adjust and make operational all protective devices.
      c. Have Project Representative witness the testing.
      d. Check that circuit breakers, meters and monitors are installed and function properly.
      e. Check functional operation of switchboards, motor control centers, control panels and other electrical equipment.
      f. Prior to energization of equipment, perform a functional checkout of the control circuit. Checkout shall consist of energizing each control circuit and operating each control, alarm, or malfunction device and each interlock in turn to verify that the specified action occurs.
      g. Document all test results and device settings in the final test report.
   2. Prepare a Test Report summarizing the final test procedures and test results.

END OF SECTION

SECTION 16110

RACEWAYS, BOXES, AND SUPPORTS

PART 1 GENERAL

1.01 SUMMARY

A. This Section covers the furnishing and installation of electrical conduits, wireways, pull boxes, cablevault, fittings, and supports. Raceways shall be provided for lighting, receptacles, power, control, fire alarm, instrumentation, signaling, and grounding systems.

1.02 QUALITY ASSURANCE

A. Referenced Standards: This Section incorporates by reference the latest revision of the following documents. These references are a part of this Section as specified and modified. In case of conflict between the requirements of this Section and those of the listed documents, the requirements of this Section shall prevail.

Reference	Title
ANSI C80.1	Rigid Steel Conduit-Zinc Coated
ANSI C80.3	Electrical Metallic Tubing-Zinc Coated
ASTM A48 REV A	Gray Iron Castings
ASTM A193/A193M REV C	Alloy-Steel and Stainless Steel Bolting Materials for High Temperature Service
ASTM F512	Smooth-Wall Polyvinylchloride Conduit and Fittings for Underground Installation
FEDSPEC WW-C-581E	Conduit, Metal, Rigid and Intermediate; and Coupling, Elbow, and Nipple, Electrical Conduit; Zinc Coated
FEDSPEC W-C-1094A	Conduit and Conduit Fitting Plastic, Rigid
NEMA ICS 6	Industrial Control and Systems Enclosures
NEMA RN1	Polyvinyl Chloride (PVC) externally Coated Galvanized Rigid Steel Conduit and Intermediate Metal Conduit
NEMA TC2	Electrical Plastic Tubing (EPT) and Conduit (EPC 40 and EPC 80)
NEMA TC6	PVC and ABS Plastic Utilities Duct for Underground Installation
NEMA 250	Enclosures for Electrical Equipment (1000 volts maximum)
NFPA 70	National Electrical Code (NEC)
NFPA 79	Electrical Standards for Industrial Machinery
UL 6	Rigid Metal Electrical Conduit
UL 360	Liquid Tight Flexible Electrical Conduit
UL 651	Rigid Nonmetal Electrical Conduit

1.03 SUBMITTALS

A. Procedures: Section 01300.

B. Include manufacturer's catalog cuts as specified by Section 16000. Include general information and detailed specifications for the products specified in this Section.

C. Certifications and calculations that raceway supports meet the seismic requirements specified in Sections 16000 and this section.

PART 2 PRODUCTS

2.01 RACEWAY

A. General requirements for raceway materials specified in this Section are listed in the RACESPECS sheets at the end of this Section. The type of raceway to be used for any given area and application shall conform to the requirements of Table A in this Section.

2.02 BOXES AND FITTINGS

A. Pull Boxes and Wiring Gutters:
   1. Device and junction boxes less than 6 inches square shall be Type FD galvanized cast ferrous. Boxes larger than FD boxes shall be constructed of sheet steel, galvanized after fabrication, or NEMA 4X stainless steel of nonmetallic.
   2. Outdoor boxes and enclosures shall be provided with neoprene gaskets on the hinged doors or removable covers.
   3. Conduit bodies shall be ferrous alloy with screw taps for fastening covers. Gaskets shall be made of neoprene.
   4. Boxes and enclosures in corrosive areas shall be NEMA 4X stainless steel or nonmetallic.
   5. Boxes in classified areas shall be NEMA Class 7 galvanized cast ferrous.
   6. Box and gutter sizes, metal thickness, and grounding shall comply with the National Electrical Code.
   7. Bolt-on junction box covers 3 feet square or larger, or heavier than 25 pounds, shall have a rigid handle.
   8. Covers larger than 3 by 4 feet shall be split.

B. Terminal Cabinets:
   1. Terminal cabinets located indoors shall be NEMA 4.
   2. Cabinets located outdoors and in corrosive areas shall be NEMA 4X.
   3. Cabinets shall be provided with hinged doors.
   4. Adjustable terminal strip mounting accessories shall be provided.
   5. Cabinets shall be provided with channel mounted terminal blocks rated 30 A, 600 Vac.
   6. Terminals shall be No. 8 minimum strap-screw type, suitable for ring tongue or locking spade terminals.

C. Conduit Seals:
   1. Install conduit seals for use in classified areas where shown in all conduit runs leaving the space. They shall be of the EYS or EZS type with male and female hubs.
   2. Use PVC-coated fittings with urethane interior coating for PVC-coated RGS; use copper free cast aluminum for rigid aluminum.
   3. The sealing compound shall be as prescribed by the manufacturer of the sealing conduit body.
   4. Use the sealant, such as Chico, in areas that are defined as classified and meet the NEC requirements for Article 500.

2.03 RACEWAY SUPPORTS

A. Conduit Supports:
   1. Provide hot-dip galvanized framing channel with end caps to support groups of conduit.
   2. Individual conduit supports shall be one-hole galvanized malleable iron pipe straps used with galvanized clamp backs and nesting backs where required.
   3. Conduit supports for PVC-coated rigid steel and PVC conduit systems shall be one-hole PVC-coated rigid steel or clamps conduit wall hangers.

B. Ceiling Hangers:
   1. Ceiling hangers shall be adjustable galvanized carbon steel rod hangers as specified. Straps or hangers of plumber’s perforated tape are not acceptable.
   2. Unless otherwise indicated, hanger rods shall be 1/2-inch all-thread rod and shall meet ASTM A193.
   3. Hanger rods in corrosive areas and those exposed to weather or moisture shall be stainless steel.

C. Suspended Raceway Supports (Racks):
   1. Suspended raceway supports shall consist of concrete inserts, galvanized carbon steel rod hangers, and jamb nuts supporting hot-dip galvanized framing channel or lay-in pipe hangers as required.

2. Unless otherwise indicated, hanger rods shall be 1/2-inch all-thread rod and shall meet ASTM A193.
3. Brace all suspended raceway supports at 30-foot intervals (alternating from one side to the other) to meet specified seismic requirements.

D. Design by Professional Engineer:
1. Raceway supporting systems, structures, and elements shall be designed to meet seismic and other building structural requirements and to support the static and dynamic load of the wiring and raceways that they will carry. Systems to be installed shall be reviewed and sealed by a Washington State Registered Professional Structural Engineer to ensure conformance with IBC seismic, building, and load requirements.

2.04 CONCRETE ENCASED DUCT BANKS

A. Concrete used for duct banks shall be Type CDF with red oxide added per Controlled Density Fill (CDF). Concrete used for protective cap shall be Class E with red oxide added.

B. Conduit embedded in concrete which is in contact with the earth shall be separated from the earth by at least 3 inches of concrete. Clearances equal to the nominal conduit diameter, but not less than 1-1/2 inches, shall be maintained between conduits encased in slabs. Clearances of less than 1-1/2 inches at conduit crossing and terminating locations are not acceptable. Galvanized rigid steel conduit encased in concrete shall have two coats of Bituplastic applied and thoroughly dried before encasement.

C. Expansion fittings shall be provided whenever embedded conduit crosses building expansion joints, between 2 adjacent structures, and between a duct bank and structure.

D. Duct banks shall be placed on an undisturbed soil base. Use Class B backfill as a base when an undisturbed soil base is not available. Backfill over the duct bank shall be consistent with the backfill required for the immediate area. The fill shall be brought up to finish grade.

E. Duct banks where upper surface is required to be exposed thus forming a walkway shall have the top surface finished smooth and level and free from defects. In these cases, do not add red pigment to the cement.

F. Locate plastic conduit spacers used in duct bank installations 5 feet on centers. Secure the spacers to the conduits by wire ties. The duct bank shall be securely anchored to prevent conduit flotation while the concrete is being placed. Conduit runs shall be watertight.

G. The ends of conduits shall be protected from damage during construction by using plastic plugs. A 1/4-inch hole shall be drilled in the lower portion of the plug to provide drainage.

2.05 UNDERGROUND MARKING TAPE

A. Provide underground marking tape.

B. Used for early warning protection of digging around reinforced concrete duct banks.

C. Low density polyethylene plastic, nominally 6 inches wide and 4-mil thickness.

D. Plastic Color: Red.

E. Imprinted continuously along the length, with message reading similar to “CAUTION – STOP DIGGING – BURIED ELECTRIC LINE BELOW.”

F. Acceptable Manufacturer:
1. Brady “Identoline.”
2. Services and Materials “Buried Underground Tape.”
3. Somerset (Thomas & Betts) “Protect-A-Line.”
4. Approved equal.

G. Underground Marking Tape for Directly Buried Conduits:
   1. 6-inch wide metallic lined tape with red polyethylene film on top and clear polyethylene film on the bottom.
   2. The message shall be clearly printed with black over red tape and shall read “CAUTION ELECTRIC LINE BURIED BELOW.”

2.06 NAMEPLATES

A. Provide nameplates for all boxes in accordance with the requirements of Section 16000. Nameplate wording shall be as indicated on the drawings.

B. Where no wording is specified, the Contractor shall provide the functional description of the device on the nameplate.

2.07 FIRESTOPS

A. Apply in accordance with manufacturer’s recommendations.

B. Acceptable Manufacturers:
   1. Flamemastic 77.
   2. Vimasco No. 1-A.
   3. Approved equal.

C. Products which are affected by water are not acceptable.

PART 3 EXECUTION

3.01 GENERAL

A. Specific raceway types and applications are indicated on the drawings and/or in the raceway schedule. When not indicated on the drawings and/or in the schedule Table A specifies the type of raceway required for each location and application by RACESPEC sheet. Use fittings, hubs and boxes as specified by the raceway type in RACESPEC. Unless otherwise indicated, in Table A, unscheduled conduit shall be galvanized rigid steel, RACESPEC type GRS.

TABLE A

Location	Application/Condition	RACESPEC
Indoor noncorrosive	Exposed	GRS
Indoor corrosive	Exposed	PGRS
Outdoor	Exposed	PGRS
Concealed	Embedded in concrete structure or beneath slab-on-grade	GRS
Underground	Instrumentation, communications and data signals encased in concrete, duct bank	GRS
Underground	Instrumentation, communications and data signals directly buried	PGRS
Underground	Power and control signals directly buried	PGRS
Underground	Power encased in concrete, duct bank	PVC8
Non-Classified	Final connection to equipment and light fixtures	LFS
Underground	Telephone service direct buried	PVC8
Indoor	Classified	PGRS

3.02 RACEWAY NUMBERING SYSTEM

A. General:
   1. Each conduit shall be identified by a unique number shown in the drawings.

B. Conduit Identification:
   1. Pressure stamp conduit numbers into a non-corrosive metal tag. Fix a tag with number to each end of each conduit and at each manhole, pullbox and handhole with Type 304 Stainless Steel wire.

3.03 CONDUIT

A. General
   1. The number of directional changes of a conduit shall be limited to 270 degrees in any run between pull boxes.
   2. Conduit runs shall be limited to a maximum of 400 feet, less 100 feet or fraction thereof, for every 90 degrees of change in direction.

B. Indoor and Outdoor Conduit Systems:
   1. Unless otherwise indicated, in general, conduit inside structures shall be exposed.
   2. Unless otherwise indicated, the Contractor shall be responsible for determining conduit routing that conforms to the installation requirements set forth herein.
   3. Install conduit to conform to the requirements of the RACESPEC sheets and the following:
      a. Install exposed conduit either parallel or perpendicular to structural members and surfaces.
      b. Two or more exposed conduits in the same general routing shall be in parallel with symmetrical bends.
      c. Exposed conduit shall be run on supports spaced not more than 8 feet apart.
      d. Where three or more conduits are located in parallel run, space them out from the wall using framing channel.
      e. Where conduits are suspended from the ceiling, support systems shall comply with the requirements of Section 16110.
      f. Secure conduit rack supports to concrete walls and ceilings by means of cast-in-place anchors or framing channel concrete inserts.
      g. Conduits shall be at least 6 inches from high temperature piping, ducts, and flues with temperatures higher than 90 degrees C.
      h. Install conduits between the reinforcing steel in walls or slabs which have reinforcing in both faces. In slabs which have only a single layer of reinforcing steel, place conduits under the reinforcement.
      i. Route conduit clear of structural openings and indicate future openings.
      j. Flash and seal watertight those conduits which pass through roofs or metal walls.
      k. Neatly group conduit into any openings cut into concrete and masonry structures, and grout using non-shrink type grout.
      l. During construction, cap conduits to prevent entrance of dirt, trash, and water.
      m. Terminate exposed conduit stubs for future use with galvanized pipe caps.
      n. Determine concealed conduit stubup locations from the manufacturer’s shop drawings.
      o. Terminate concealed conduit for future use in equipment or by galvanized couplings plugged flush with structural surfaces.
      p. Where the drawings indicate future duplication of equipment wired hereunder, provide concealed portions of conduits for future equipment.
      q. Conduit installed horizontally shall allow headroom of at least 7 feet except where it may be installed along structures, piping, and equipment, or in other areas where headroom cannot be maintained because of other considerations.
      r. Terminate all conduits that enter enclosures by fittings that ensure that the NEMA rating of the enclosure is not affected or changed.

s. Connect underground metallic or nonmetallic conduit that turns out of concrete, masonry or earth to a 90-degree elbow of PVC-coated rigid steel conduit before emergence.

t. Transitions from concealed or underground or embedded locations to exposed or aboveground or above-grade locations shall be made using type PGRS conduit for a distance of at least 12 inches on either side of transition.

u. Conduit across structural joints where structural movement is allowed shall have an OZ-Gedney “Type DX” or Crouse-Hinds “Type XD,” bonded, weathertight expansion and deflection fitting of that conduit size.

C. Underground Conduit System:

1. All excavation, backfilling, and concrete work shall conform to respective Sections of these Specifications. Underground conduit shall conform to the following requirements:

a. Unless otherwise indicated, all underground conduits shall be concrete encased.

b. Concrete encasement on exposed outdoor conduit risers shall continue to 3 inches above grade, with top crowned and edges chamfered.

c. Underground conduit bend radius shall be not less than 2 feet at vertical risers nor less than 3 feet elsewhere.

d. Unless otherwise indicated, underground conduits and conduit banks shall have 2 feet minimum earth cover.

e. Underground conduit banks through building walls shall be cast-in-place or concreted into boxouts with waterstops on all sides of the boxout.

f. Using a special rubber gasketed sleeve and joint assemblies, or with sleeves and modular rubber sealing elements, seal watertight those conduits not encased in concrete and passing through walls that have one side in contact with earth.

g. Immediately upon completion of pouring concrete, thoroughly swab conduits on the inside. After the concrete has set, and before backfilling, pull a mandrel, having a diameter equal to the nominal conduit inside diameter minus 1/2 inch, and not less than 4 inches long, through each conduit. If the mandrel showed signs of protrusions on the inside of the conduit, repair or replace the conduit.
Provide all spare raceways with a nylon pull rope.

3.04 RACEWAY SPECIFICATION (RACESPEC) SHEETS

A. The following RACESPECS are included in this Section:

RACESPEC Symbol	Raceway Description
GRS	Galvanized rigid steel conduit
LFS	Liquidtight flexible steel conduit
PGRS	PVC coated rigid steel conduit
PVC8	Schedule 80 PVC conduit
WW	Wireway and auxiliary gutter

Raceway Identification:	GRS
Description:	Galvanized rigid steel conduit.
Compliance:	ANSI C80.1, UL 6.
Finish:	Hot-dip galvanized after fabrication, inside and outside. Smooth finished surfaces.
Manufacturers:	Allied Tube and Conduit Corp., Wheatland Tube Co., or equal.
Minimum Size:	Unless otherwise specified, 3/4 inch for exposed, 1 inch for embedded, encased, or otherwise inaccessible.
Fittings:	Hubs: Insulated throat with bonding locknut, hot-dip galvanized. The hubs shall utilize a neoprene O-ring and shall provide a watertight connection. O-Z Gedney, CHM-XXT, or equal.
Unions:	Electrogalvanized ferrous alloy type Appleton UNF or UNY, Crouse-Hinds UNF or UNY, or equal. Threadless fittings are not acceptable.
Boxes:	
Indoor:	Type FD cast ferrous for all device boxes and for junction boxes less than 6 inches square. NEMA 12 welded steel 6 inches square and larger. Door shall have hinges with clamp locks. Boxes in process areas shall be NEMA 4 watertight.
	Conduit Bodies: Ferrous alloy type with screw taps for fastening covers. Gaskets shall be made of neoprene.
Outdoor and Wet Areas:	Type FD cast ferrous for all devices and for junction boxes less than 6 inches square. NEMA 4X stainless steel or nonmetallic for 6 inches square and larger.
Corrosive:	NEMA 4X stainless steel or nonmetallic.
Classified:	NEMA Class 7 cast ferrous.
Elbows:	
3/4″ through 1-1/2″:	Factory fabricated or field bent.
2″ through 6″:	Factory fabricated only.
Conduit Bodies:	
3/4″ through 4″:	Malleable iron, hot-dip galvanized, unless otherwise noted. Neoprene gaskets for all access plates. Tapered threads for all conduit entrances.
5″ and 6″:	Electrogalvanized iron or cast iron box.
Expansion Fittings:	Expansion fittings in embedded runs shall be watertight and shall be provided with an internal bonding jumper. The expansion material shall be neoprene and shall allow for 3/4-inch movement in any direction.
Manufacturers:	Appleton, Crouse-Hinds, Hubbel, O.Z. Gedney, or equal.
Installation:	Galvanized rigid steel conduit shall be made up tight and with conductive “coppershield” thread compound. Joints shall be made with standard couplings or threaded unions. Steel conduit shall be supported away from the structures using hot-dip galvanized malleable iron straps with nesting backs.
	Conduit entering boxes shall be terminated with a threaded hub with a

grounding bushing.

Exposed male threads on galvanized rigid steel conduit shall be coated with zinc-rich paint.

Raceway Identification:	LFS
Description:	Liquidtight flexible steel conduit.
Application:	Final connection to equipment subject to vibration or adjustment.
Compliance:	UL 360.
Construction:	Spirally wound galvanized steel strip with successive convolutions securely interlocked and jacketed with liquidtight plastic cover.
Minimum Size:	3/4 inch.
Fittings:	Cadmium-plated malleable iron body and gland nut with cast-in lug, brass grounding ferrule threaded to engage conduit spiral and O-ring seals around the conduit and box connection and insulated throat. Forty-five and 90-degree fittings shall be used where applicable.
Installation:	The length of flexible liquidtight conduit shall not exceed 15 times the trade diameter of the conduit. The length of liquidtight conduit shall not exceed 36 inches. Liquid-tight flexible steel conduit shall be made up tight and with conductive “coppershield” thread compound.

Raceway Identification:	PGRS
Description:	Galvanized rigid steel conduit, corrosion-resistant, polyvinyl chloride (PVC) coated.
Compliance:	ANSI C80.1, UL 6, NEMA RN1.
Finish:	PGRS shall be hot dipped galvanized rigid steel conduit. The inside and outside, as well as the threads shall be galvanized. A minimum 40-mil thick PVC coating shall be bonded to the outside of the conduit and the inside shall be coated with 2-mil urethane. Coating shall be free of pinholes. Bending of conduit shall not damage either the interior or exterior coating. Bond strength shall exceed the tensile strength of the PVC coat. Elbows shall be factory made and coated.
Minimum Size:	3/4 inch.
Fittings:	Similarly coated to the same thickness as the conduit and provided with Type 316 stainless steel hardware. A 2-mil urethane coating shall be applied to the interior, and the threads of all fittings and couplings. Conduit and fittings shall be manufactured by the same company.
Hubs:	Hubs for connection of conduit to junction, device, pull or terminal boxes shall be threaded and made of cast ferrous alloy. Hubs shall be galvanized steel and have insulating bushings with bonding locknuts. The hubs shall utilize a neoprene O-ring and shall provide a watertight connection.
Boxes:	
Non-Classified:	NEMA 250, Type 4X stainless steel or nonmetallic.
Classified:	NEMA 250, Type 7D cast ferrous.
Installation:	PVC-coated conduit shall be supported away from the structure using PVC-coated conduit wall hangers. All conduit threads shall be covered by a plastic overlap which shall be coated and sealed per manufacturer's recommendations. Plastic coated conduit shall be made tight with special wrenches and fittings designed for tightening PVC-coated conduit. All threads shall be protected against corrosion per NEC 300.6 (a) by liberally applying an approved electrically conductive, corrosion-resistant compound – "coppershield." Pipe wrenches and channel locks shall not be used for tightening plastic coated conduits. Damaged areas shall be patched, using manufacturer's recommended material. The area to be patched shall be built up to the full thickness of the coating. Painted fittings are not acceptable.

Raceway Identification:	PVC8
Description:	Rigid nonmetallic conduit, extra heavy wall thickness for all locations including direct bury under roadways and where exposed to physical damage.
Compliance:	NEMA TC2, UL 651.
Construction:	Schedule 80, high-impact, polyvinylchloride (PVC).
Minimum Size:	3/4 inch exposed; 1 inch embedded or encased.
Fittings:	PVC solvent weld type.
Boxes:	
Indoor:	NEMA Class 4, nonmetallic.
Outdoor and Corrosive:	NEMA Class 4X, nonmetallic.
Installation:	Exposed PVC conduit shall be run on supports spaced not more than 3 feet apart for conduits up to 1 inch 5 feet apart for conduits 1-1/4 inches to 2 inches and 6 feet apart for conduits 2-1/2 inches and larger. PVC conduit shall not be provided where it will be damaged by heat. PVC conduit shall have bell ends where terminated at walls.

Raceway Identification:	WW
Description:	Wireway and auxiliary gutter, flanged, oiltight type with hinged covers.
Compliance:	JIC EMP-1.
Minimum Size:	4-inch by 4-inch.
Finish:	Hot-dip galvanized after fabrication, inside and outside. Smooth finished surfaces.
Application:	As indicated on the drawings.

END OF SECTION

SECTION 16120

600 VOLT CONDUCTORS AND CABLES

PART 1--GENERAL

1.01 SUMMARY

A. This Section specifies conductors and cables rated 600 volts used for power, lighting, receptacle, signal, and control circuits.

1.02 QUALITY ASSURANCE

A. Referenced Standards: This Section incorporates by reference the latest revision of the following documents. These references are a part of this Section as specified and modified. In case of conflict between the requirements of this Section and those of the listed documents, the requirements of this Section shall prevail.

Reference	Title
ASTM B3	Soft or Annealed Copper Wire
ASTM B8	Concentric-Lay-Stranded Copper Conductors, Hard, Medium-Hard, or Soft
ASTM B33	Tinned Soft or Annealed Copper Wire for Electrical Purposes
ASTM B189	Lead-Coated and Lead-Alloy-Coated Soft Copper Wire for Electrical Purposes
ICEA S-68-516	Ethylene-Propylene-Rubber-Insulated Wire
IEEE 383	Type Test of Class IE Electric Cables, Field Splices, and Connections for Nuclear Power Generating Stations
NEMA WC7	Cross-Linked-Thermosetting Insulated Wire and Cable for the Transmission and Distribution of Electric Energy
NEMA WC57/ICEA S-73-532	Standard for Control Cables
NEMA WC70/ICEA S-95-658	Non-Shielded Power Cables Rated 2000 V or less
NEC 310-12	General Conductors Color Code
NFPA 820	Fire Protection in Wastewater Treatment and Collection Facilities
NFPA 70	National Electric Code (NEC)
UL 44	Rubber-Insulated Wires and Cables
UL 83	Thermoplastic-Insulated Wires and Cables

1.03 SUBMITTALS

A. Procedures: Section 01300.

B. Catalog cuts showing general information of the conductors and cable.

PART 2 PRODUCTS

2.01 GENERAL

A. Unscheduled Conductors and Cables:
   1. With the exception of lighting, communication, and receptacle circuits, the type, size and number of conductors shall be as specified on the drawings.
   2. Lighting and receptacle circuit conductors are not shown on the drawings and shall be sized by the Contractor in accordance with the NEC to limit voltage drop to 3 percent.
   3. Minimum size of lighting and receptacle circuits shall be 12 AWG.
   4. Number and types of communication cables shall be as required for the particular equipment provided.
   5. Unless otherwise indicated, provide lighting and receptacle circuit conductors in accordance with CABLESPEC "XHHW-2".

B. Cable Specification Sheets (CABLESPEC): General requirements for conductors and cables

specified in this Section are listed on CABLESPEC sheets in paragraph 16120-3.06.

2.02 COLOR CODING

A. General:
   1. Multiconductor power and control cable colors shall be manufacturer's standard.
   2. Single conductor control conductor color shall be yellow, except for the grounded conductor which shall be white.

B. Power Conductors:
   1. Single-conductor power conductors shall be color coded in accordance with the following:

Use	Cable	Color
Three-phase, 480-volt power or 480/277	Phase A	Brown
	Phase B	Orange
	Phase C	Yellow
	Ground	Green
	Neutral	Gray
Three-phase, 120/208-volt power	Phase A	Black
	Phase B	Red
	Phase C	Blue
	Neutral	White
	Ground	Green
Single-phase, 120/240-volt power	Line 1	Red
	Line 2	Black
	Neutral	White
	Ground	Green

   2. Cables sized No. 4 AWG and larger may be black with colored 3/4-inch vinyl plastic tape applied in 3-inch lengths around the cable at each end.
   3. Tag the cables at terminations and in pull boxes, handholes, and manholes.

C. Signal Conductors: Unless otherwise indicated, cables shall be color coded black and white for pairs or black, red, and white for triads.

D. Control Conductors: Control conductors color coding shall be manufacturer's standard.

E. Signal Conductors: Unless otherwise indicated, cables shall be color coded black and white for pairs or black, white, and red for triads.

2.03 POWER AND CONTROL CONDUCTORS AND CABLE, 600 VOLT

A. Single Conductor:
   1. Stranded and used in conduits for power and control circuits.
   2. Unless otherwise indicated, provide in accordance with CABLESPEC "XHHW-2".

B. Multiconductor Cable:
   1. Used for power and control circuits routed in cable tray.
   2. Cables shall be UL labeled, Type TC, designed for cable tray installation in accordance with NEC 340.
   3. The type of insulation, number of conductors, and size of conductor shall be as specified.
   4. Unless otherwise indicated, provide multiconductor power and control cable in accordance with CABLESPEC "MC".
   5. Power Cable: Containing three or four conductors, as specified, plus an equipment grounding conductor.
   6. Control Cable: Unless otherwise indicated, shall be size 14 AWG.

2.04 SIGNAL CABLES

A. General:
   1. Provide signal cable for instrument signal transmission, alarm, communication and other circuits as specified. Circuit shielding shall be provided in addition to cable shielding.
   2. Provide instrument signal circuits in compliance with the instrument manufacturer's recommendations.
   3. Unless otherwise indicated, provide single circuit signal cable in accordance with CABLESPEC "SIC".
   4. Unless otherwise indicated, provide multicircuit signal in accordance with CABLESPEC "MIC".

2.05 PORTABLE CORD

A. Unless otherwise indicated, provide portable cord in accordance with CABLESPEC "CORD".

B. Cords shall contain an equipment grounding conductor.

2.06 SPLICING AND TERMINATING MATERIALS

A. Connectors:
   1. Tool applied compression type of correct size and UL listed for the specific application.
   2. Tin-plated high conductivity copper.
   3. For wire sizes No. 10 AWG and smaller: Nylon self-insulated, ring tongue or locking-spade terminals.
   4. For wire sizes No. 8 AWG and larger: One-hole lugs up to size No. 3/0 AWG, and two-hole or four-hole lugs for size No. 4/0 and larger.
   5. Mechanical clamp, dimple, screw-type connectors are not acceptable.

B. Motor Connection Kits:
   1. Shall consist of heat-shrinkable, polymeric insulating material over the connection area and a high dielectric strength mastic to seal the ends against ingress of moisture and contamination.
   2. Shall accommodate a range of cable sizes for both in-line and stub-type configurations.
   3. Shall be independent of cable manufacturer's tolerances.

PART 3 EXECUTION

3.01 GENERAL

A. Identify each power and control conductor at each terminal to which it is connected. The marking system shall comply with Section 16000.

B. Wire Pulling:
   1. Complete the pulling of wire and cable into conduit or trays without damaging or putting undue stress on the cable insulation.
   2. Soapstone, talc or UL listed pulling compounds are acceptable lubricants for pulling wire and cable.
   3. Grease is not acceptable.
   4. Raceway construction shall be complete, cleaned, and protected from the weather before cable is placed.

C. Whenever a cable leaves a raceway, provide a cable support.

D. When flat bus bar connections are made with unplated bar, the Contractor shall scratch-brush the contact areas. Torque bolts to the bus manufacturer's recommendations.

E. Provide and install yellow three-strand copolymer polyolefin pull string in all new conduits. String shall extend at least 1 foot beyond each end of the conduit and be tied off on bushing or in other manner acceptable to the Project Engineer.

3.02 600 VOLT CONDUCTOR AND CABLE

A. Lacing and Bundling:

1. Lace and bundle conductors in panels and electrical equipment, No. 6 AWG and smaller, at intervals not greater than 6 inches, spread into trees and connected to their respective terminals.
2. Lacing shall be made up with plastic cable ties.
3. Lacing is not necessary in plastic panel wiring duct.
4. Bundle conductors crossing hinges into groups not exceeding 12 and arrange so that they will be protected from chafing when the hinged member is moved.

B. Slack:
1. Provide slack in junction and pull boxes, handholes and manholes.
2. Slack shall be sufficient to allow cables or conductors to be routed along the walls of the box.
3. Amount of slack shall be equal to largest dimension of the box.
4. Where plastic panel wiring duct is provided for wire runs, lacing is not required.
5. Do not use plastic panel wiring duct in manholes and handholes.

C. Stranded Conductors:
1. Terminate as described in Section 16120, except where terminals will not accept such terminations.
2. In these cases, terminate the conductors directly on the terminal block.
3. Install compression lugs and connectors using manufacturer's recommended tools.

D. Raceway fill limitations shall be as defined by NEC and the following:
1. Lighting and receptacle circuits may be in the same conduit in accordance with derating requirements of the NEC.
2. However, lighting and receptacle circuits shall not be in conduits with power or control conductors.

E. Make terminations at solenoid valves, 120 volt motors, and other devices provided with pigtail leads using self-insulating tubular compression connectors.

3.03 SIGNAL CABLE

A. Circuits:
1. Run as individually shielded twisted pairs or triads.
2. Do not, in any case, make up a circuit using conductors from different pairs or triads.
3. Use triads wherever 3-wire circuits are required.
4. Unless otherwise indicated, provide terminal blocks at instrument cable junctions, and identify circuits at such junctions.
5. Run signal circuits without splices between instruments, terminal boxes, or panels.

B. Shields are not acceptable as a signal path, except for circuits operating at radio frequencies and utilizing coaxial cables.

C. Common ground return conductors for two or more circuits are not acceptable.

D. Unless otherwise indicated, bond shields to the signal ground bus at the control panel and isolated from ground and other shields at other locations. Provide terminals for running signal leads and shield drain wires through junction boxes.

E. Shield Drain Wire:
1. Terminate spare circuits and the shield drain wire on terminal blocks at both ends of the cable run and cause to be electrically continuous through terminal boxes.
2. Do not ground shield drain wires for spare circuits at either end of the cable run.

F. Terminal Boxes:
1. Provide at instrument cable splices.
2. If cable is buried or in raceway below grade at splice, provide an instrument stand as specified with terminal box mounted approximately 3 feet above grade.

G. Install and terminate cable for paging, telephone, and security systems in compliance with the

manufacturer's recommendations.

3.04 PORTABLE CORD

A. Portable cord feeding permanent equipment, such as pendant cords, pumps, cranes, hoists, and portable items shall have a wire mesh cord grip of flexible stainless steel wire to take the tension from the cable termination.

B. Connect portable cords to permanent wiring with the use of terminals.

C. Use in-line taps and splices only where specified.

3.05 TESTING

A. General: The Contractor shall test conductors and cable in accordance with Section 16000.

B. Signal Cable:
   1. Test each signal pair or triad for electrical continuity.
   2. Test each shield drain conductor for continuity. Shield drain conductor resistance shall not exceed the loop resistance of the pair or triad.
   3. Test each conductor (signal and shield drain) for insulation resistance with all other conductors in the cable grounded.
   4. Instruments used for continuity measurements shall have a resolution of 0.1 ohms and an accuracy of better than 0.1 percent of reading plus 0.3 ohms. Use a 500 volt megohmmeter for insulation resistance measurements.

3.06 SCHEDULES

A. Cables are scheduled in on the drawings.

3.07 CABLE SPECIFICATION SHEETS (CABLESPEC)

A. General:
   1. Conductor and cable types for different locations, service conditions and raceway systems are specified on individual cable specification sheets (CABLESPECS).
   2. Install scheduled and unscheduled conductors and cables in accordance with the CABLESPECS.

B. CABLESPEC SHEETS: CABLESPEC sheets follow.

1.

Cable System Identification:	MC
Description:	Multiconductor power and control cable, No. 1/0 AWG and larger, approved for tray installation and in accordance with UL 1569
Voltage:	600 volts
Conductor Material:	Bare annealed copper; stranded in accordance with ASTM B8
Insulation:	XHHW-2, 90 degree C dry, 75 degree C wet, crosslinked polyethylene in accordance with NEMA WC57 / ICEA S-73-532 (control cable), NEMA WC70 / ICEA S-95-658 (Power Cable), and UL 44.
Assembly:	Individual conductors cabled together with nonhydroscopic fillers and binding tape.
Sheath: :	Impervious, continuous, corrugated aluminum welded over cable core. sheath shall meet the grounding conductor requirements of NEC table 250-95
Jacket:	50 mil minimum, polyvinylchloride (PVC) in accordance with UL 1277
Flame Resistance:	IEEE 383
Manufacturer(s):	Okonite, Houston Wire & Cable, or equal.
Uses Permitted:	Cable tray, direct burial, encased in concrete in normal or Class 1, Division 2 atmospheres.
Execution:	
	Installation: Install in accordance with Section 16120. Testing: Test in accordance with Section 16000 and Section 16030.

2.

Cable System Identification:	TC
Description:	Multiconductor power and control cable, No. 14 AWG minimum through No. 1 AWG, approved for tray installation and in accordance with UL 1581
Voltage:	600 volts
Conductor Material:	Bare annealed copper; stranded in accordance with ASTM B8
Insulation:	XHHW-2, 90 degree C dry, 75 degree C wet, crosslinked polyethylene in accordance with NEMA WC57 / ICEA S-73-532 (control cable), NEMA WC70 / ICEA S-95-658 (Power Cable), and UL 44.
Assembly:	Individual conductors cabled together with nonhydroscopic fillers and binding tape.
Jacket:	50 mil minimum, polyvinylchloride (PVC) in accordance with UL 1581
Flame Resistance:	IEEE 383
Manufacturer(s):	Okonite, Houston Wire & Cable, or equal.
Uses Permitted:	Cable tray, direct burial, encased in concrete in normal or Class 1, Division 2 atmospheres.
Execution:	
	Installation: Install in accordance with Section 16120. Testing: Test in accordance with Section 16000 and Section 16030.

3.

Cable System Identification:	XHHW-2
Description:	Single conductor Cross-linked polyethylene power and control cable for sizes No. 14 AWG through No. 1 AWG
Voltage:	600 volts
Conductor Material:	Bare annealed copper; stranded in accordance with ASTM B8
Insulation:	XHHW-2, 90 degree C dry, 75 degree C wet, cross-linked polyethylene in accordance with NEMA WC57/ ICEA S-73-532 (control cable), NEMA WC70/ ICEA S-95-658 (power cable).
Jacket:	None
Flame Resistance:	N/A
Manufacturer(s):	Okonite, X-Olene; Cablec, Durasheath XLP; or equal
Execution:	Installation: Install in accordance with Section 16120. Testing: Test in accordance with Section 16000 and Section 16030.

4.

Cable System Identification:	SIC
Description:	Single twisted, shielded pair or triad, 16 AWG, instrumentation cable, UL listed. NEC type TC.
Voltage:	600 volts
Conductor Material:	Bare annealed copper; stranded in accordance with ASTM B8
Insulation:	15 mil, 90°C Dry / 75°C Wet, Polyvinyl chloride (PVC) with 4 mil nylon conduit or jacket
Lay:	Twisted on a 2-inch lay
Shield:	100 percent, 1.35 mil aluminum-Mylar tape with 18 AWG 7-strand tinned copper drain wire
Jacket:	45 mil polyvinylchloride (PVC)
Flame Resistance:	UL 1277
Manufacturer(s):	Okonite, Okoseal-N type P-OS; or equal
Execution:	Installation: Install in accordance with Section 16120. Testing: Test in accordance with Section 16120.

5.

Cable System Identification:	MIC
Description:	Multiple twisted, shielded pairs or triads, 16 AWG, instrumentation cable, UL listed
Voltage:	600 volts
Conductor Material:	Bare annealed copper; stranded in accordance with ASTM B8
Insulation:	15 mil, 90°C Dry / 75°C Wet, Polyvinyl chloride (PVC) with 4 mil nylon conduit or jacket
Lay:	Twisted on a 2-inch lay
Shield:	100 percent, 1.35 mil aluminum-Mylar tape with 18 AWG 7-strand tinned copper drain wire
Overall Shield:	2.35 mil aluminum-Mylar tape with a No. 20 AWG 7-strand tinned copper drain wire
Jacket:	45 mil polyvinylchloride (PVC)
Flame Resistance:	UL 1277
Manufacturer(s):	Okonite, Okoseal-N type SP-OS; or equal
Execution:	Installation: Install in accordance with Section 16120. Testing: Test in accordance with Section 16120.

6.

Cable System Identification:	CORD
Description:	Portable Cord, 10 AWG and smaller, UL listed, type SO; larger than 10 AWG, UL listed type G
Voltage:	600 volts
Conductor Material:	Flexible rope stranded per ASTM B189 and B33. Conductors shall be coated except ground conductors may be uncoated.
Insulation:	Bare annealed copper; stranded in accordance with ASTM B8. Insulation shall be ethylene propylene (EPR) as per ICEA S-68-516 and rated for continuous operation at 90 degrees C.
Jacket:	Heavy-duty neoprene as per ICEA S-68-516.
Manufacturer(s):	Okonite, Okocord; or equal
Execution:	Installation: Install in accordance with Section 16120. Testing: Test in accordance with Section 16000 and Section 16030.

END OF SECTION

SECTION 16175

MISCELLANEOUS ELECTRICAL DEVICES

PART 1 GENERAL

1.01 SUMMARY

A. This Section specifies miscellaneous electrical control and power devices, relays, magnetic contactors, disconnect switches, manual starters, and overcurrent protection.

1.02 QUALITY ASSURANCE

A. Referenced Standards: This Section incorporates by reference the latest revision of the following documents. These references are a part of this Section as specified and modified. In case of conflict between the requirements of this Section and those of the listed documents, the requirements of this Section shall prevail.

Reference	Title
NEMA 250	Enclosures for Electrical Equipment (1,000 volts maximum)
NEMA ICS 1	Industrial Controls and Systems: General Requirements.
NEMA ICS 2	Industrial Controls and Systems: Controllers, Contactors, and Overload Relays, Rated Not More Than 2,000 Volts AC or 750 Volts DC.
NEMA KS 1	Enclosed and Miscellaneous Distribution Equipment Switches (600 Volts Maximum)

1.03 SUBMITTALS

A. Procedures: Section 01300.

B. Product Data: Manufacturer's catalog data: Section 16000.

C. Applicable operation and maintenance information.

PART 2 PRODUCTS

2.01 CONTROL DEVICES

A. Pushbuttons:
   1. Flush head, heavy-duty, with NEMA rating to match enclosure type.
   2. Operators: Red for stop functions and black for all other functions.
   3. Provide pushbuttons designated “Lock-Out-Stop” (LOS) with a padlockable attachment to maintain the device in a depressed (stop or open) position.
   4. Escutcheon legend as specified on the Drawings.
   5. Unless otherwise specified, use momentary contact type.
   6. Contact blocks:
      a. NEMA ICS 2 designation A600 except when switching circuits monitored by programmable controllers or other solid state circuits.
      b. Hermetically sealed, logic-read type.
      c. Acceptable manufacturer:
         1) Allen-Bradley.
         2) Square D.
         3) Approved equal.

B. Selector Switches:
   1. Heavy-duty, with NEMA rating to match enclosure type.
   2. Unless otherwise indicated, contact blocks and number of positions as required to perform the specified operations.
   3. Contact blocks: Rated as specified in this Section.
   4. Escutcheon legend: As indicated on the Drawings.

5. Acceptable manufacturer: Where solid state loads are switched, and the indicated contact development cannot be obtained with logic-read type contacts:
    a. Blue Line with Type D contacts.
    b. Project Representative knows of no equal.

C. Indicating Lights:
1. Indicating lights: 5 to 6 VDC light emitting diodes (LEDs) with push-to-test feature.
2. Testing: As a group using a common lamp test button.
3. Indicating light colors: Per Section 16000.
4. Heavy-duty, with NEMA rated socket/wiring to match enclosure type.

D. Control Stations:
1. Classification, unless otherwise specified:
    a. Indoor locations: NEMA 1.
    b. Outdoor locations: NEMA 3R or 4.
    c. Corrosive areas: Nonmetallic NEMA 4X.
    d. Hazardous areas: NEMA 7.
2. Pushbuttons: Protective Hypalon boots.
3. When indicating lights are specified, size to accommodate the transformer type lights.
4. Acceptable Manufacturer:
    a. Allen-Bradley, 800 H series.
    b. Crouse-Hinds, NCS series.
    c. Approved equal.

2.02 CONTROL RELAYS

A. Load-switching Control Relays:
1. When used for switching loads (solenoids, actuators, contactors, motor starter coils, etc.): Heavy-duty machine tool type.
2. Relays that have contacts used for remote interlocking or when the switching load is not shown: Heavy-duty machine tool type.
3. Contacts: As a minimum, 4-pole and field interchangeable to either normally open or normally closed. Relay shall be capable of accepting a 4-pole adder.
4. AC relays: NEMA A600 contact ratings and electrical clearances for up to 600 volts.
5. DC relays: NEMA P300 contact ratings and electrical clearances for up to 250 volts.
6. Acceptable Manufacturer:
    a. Allen Bradley Bulletin 700.
    b. Square D Class 8501.
    c. Approved equal.

B. Logic Level Switching Control Relays:
1. Minimum of three SPDT, gold-flashed, fine silver contacts rated 3 amps resistive at 120V AC or 28V DC.
2. Plug-in type with heavy-duty, barrier-protected screw terminal sockets and clear polycarbonate dust cover with clip fastener.
3. AC models: Neon lamp indicator wired in parallel with coil.
4. Acceptable manufacturer (Control relays used for switching solid-state logic and signal circuits):
    a. Allen Bradley or Potter Brumfield series KUP.
    b. Approved equal.

C. Latching Relay:
1. Electrically actuated latching relay or an industrial relay with an electrically operated latching attachment.
2. Latching mechanism: One SET coil and one RESET coil rated for continuous duty on 120 VAC, or as otherwise shown on the Drawings.
3. Maintain the last state upon a power failure.
4. Contacts: Rated B300 and hermetically sealed in a glass envelope.

5. Normally open and normally closed as shown on the Drawings.
6. Acceptable manufacturer:
   a. Allen-Bradley.
   b. Cutler-Hammer.
   c. Approved equal.

D. Timers:
1. Timing relays:
   a. Solid-state, pulse count type using a high frequency RC oscillator and integrated circuit counter for timing.
   b. Do not use electrolytic capacitors in the timing circuits.
   c. Time delays from 0.1 seconds to 48 hours, adjustable over a 20:1 range.
   d. Timing adjustment: Knob adjustment on the top of the unit.
   e. On-delay, off-delay, and single-shot timing models.
   f. Reset in 0.03 seconds or less.
   g. Timer accuracy: Plus or minus 2.0 percent under normal conditions.
   h. Two NEMA form-C timed contacts.
   i. Acceptable manufacturer:
      1) Agastat, STA series.
      2) Agastat BTSAIISC with locking bail STAOOI if equal socket.
      3) General Electric or Approved equal.
2. Motor-driven timers:
   a. Mounted in a one-piece molded case, permanently mounted and wired.
   b. Driven by a synchronous motor which starts timing when initiated by an external signal.
   c. Time settings: Made by turning a knob on the front of the dial.
   d. Neon pilot light visible from the front of the timer shall glow red when the timer motor is energized.
   e. Visual indication by a cycle progress pointer which advances to zero from the setting back to zero as time progresses.
   f. Two sets of "instantaneous" NEMA form-C contacts which actuate when the timing is initiated.
   g. One set of "delayed" NEMA form-C contacts which actuates when the unit has timed out.
   h. Reset: Unless otherwise indicated, when the timing cycle is completed, timer automatically resets.
   i. Acceptable manufacturer:
      1) Eagle Cycle-flex reset timer HP5 series.
      2) Automatic Timing Controls Series 305D.
      3) Approved equal.

2.03 MAGNETIC CONTACTORS

A. Motor contactors:
1. Designed for continuous operation of induction motors at 600 volts or less at 60 Hz and comply with NEMA ICS 2-321.
2. Minimum contactor size: Unless otherwise indicated, NEMA size 1.
3. Supply the contactor with a normally open auxiliary contact for use as a hold-in contact as a minimum. Provide additional contacts as indicated.
4. Additional contacts as needed.
5. The coil voltage, frequency, and number of poles to be as specified.

2.04 SAFETY DISCONNECT SWITCHES

A. Heavy-duty, safety type rated 600 volts AC complete with current limiting fuses sized to match switch ampere rating.

B. Classification, unless otherwise specified:

1. Outdoor or corrosive areas: NEMA 4X, nonmetallic.
2. Hazardous areas: NEMA 7.
3. Classified areas: Suitable for the specified classification.

C. Operating handle: Capable of being padlocked in the "off" position.

D. Operator: Positive, quick-make, quick-break mechanism.

E. Switch Mechanisms: One auxiliary contact rated B150, per NEMA ICS, 2-125, that opens before the switch blades.

F. Horsepower rated for motors and comply with NEMA KS 1.

G. Defeatable door interlocks that prevent the door from opening when the operating handle is in the "on" position.

H. Switches shall have line terminal shields.

I. Acceptable Manufacturer:
1. Westinghouse Type H-600.
2. General Electric.
3. Siemens.
4. Square D.
5. Approved equal.

2.05 MANUAL STARTERS

A. Manual starters:
1. Horsepower rated quick-make, quick-break, toggle mechanism together with 1 or 2 overloads as specified.

2.06 OVERCURRENT PROTECTION

A. Circuit breakers:
1. Thermal magnetic, molded-case type with the ampere rating as specified.
2. Unless otherwise indicated, circuit breaker interrupting rating:
a. 10,000 amperes symmetrical minimum for service at 240 volts and below.
b. 22,000 amperes symmetrical minimum for service above 240 volts.

2.07 ELAPSED TIME INDICATORS

A. Panel-mounted, non-resetable, six digit, hour indicator, rated 120 volts AC, 60 Hz.

2.08 TEMPERATURE TRIP RELAY

A. Capable of monitoring electric motor winding temperatures based on input signals from three 10 ohm copper 3-wire resistance temperature detectors (RTD).

B. Equipped with light emitting diodes (LED) to indicate which RTD is at the highest temperature. The highest temperature shall be internally compared to two trip settings to trip SPDT output relays. The output relays shall be settable at different temperatures and shall de-energize at the set point on increasing temperature.

C. Relay Contact Minimum Rating: 240 VAC, 5A non-inductive.

D. Output Signal: 0 to 1 mA, linearly proportional to the temperature of the hottest RTD.

E. Powered by 120 VAC, 60 Hz.

F. Acceptable Manufacturer:
1. Allen Bradley
2. Cuttler Hammer
3. Approved equal.

2.09 SPEED ADJUSTMENT POTENTIOMETER

A. Single-turn, heavy-duty potentiometer.

B. Molded resistance track rated at 2 watts 500 volts. Resistance value: As shown on the Drawings, or if not shown, then suitable for the application.

C. Equipped with a positive positioning feature to prevent backlash and movement due to vibration.

D. Bushing mounted using a NEMA Type 13 oiltight mounting. Include a legend plate with graduated markings from 0 to 100 percent and the word “SPEED.”

E. Acceptable Manufacturer:
   1. Cuttler Hammer
   2. Allen-Bradley 800T.
   3. Approved equal.

2.10 SELECTOR SWITCHES

A. For Fans: 600V, heavy duty two-position, four-circuit, suitable for Class 1, Division 2 area.

B. Indicating plate markings as follows: “Enable-Stop.”

C. Acceptable Manufacturer:
   1. Appleton
   2. Crouse-Hinds EDS 21272.
   3. Approved equal.

2.11 NAMEPLATES

A. For all control stations, relays, timers, motor contactors and disconnect switches: Per Section 16000.

PART 3 EXECUTION

3.01 GENERAL

A. Mount control stations, contactors, and safety disconnect switches 48 inches above finished floor.

B. Test all products per Section 16030.

END OF SECTION

SECTION 16176

LOCAL CONTROL PANELS

PART 1 GENERAL

1.01 SUMMARY

A. This Section specifies local control panels for controlling process equipment, consisting of enclosures, wiring, and electrical control devices.

1.02 QUALITY ASSURANCE

A. Referenced Standards: This Section incorporates by reference the latest revision of the following documents. These references are a part of this Section as specified and modified. In case of conflict between the requirements of this Section and those of the listed documents, the requirements of this Section shall prevail.

Reference	Title
EIA RS-310-C	Racks, Panels, and Associated Equipment
ANSI/NEMA ICS 2	Industrial Control Devices, Controllers, and Assemblies
ANSI/NEMA ICS 6	Enclosures for Industrial Controls and Systems
NFPA 70	National Electrical Code
UL 508	Industrial Equipment

B. Listing and labeling: See Section 16000.

1.03 SUBMITTALS

A. Procedures: Section 01300.

B. Shop drawings and equipment data: Section 16000.

C. Layout drawings of the local control panel enclosures indicating the front door and rear panel equipment arrangement and dimensions. Provide a list of materials and components with the layout drawings.

D. Instrumentation systems' manufacturer design.

E. Elementary and internal connection diagrams: Section 16000.

F. A written description of the elementary diagram "sequence of operation."

G. Operating and maintenance information.

PART 2 PRODUCTS

2.01 ACCEPTABLE MANUFACTURERS

A. Hoffmann Engineering Company.

B. Square D.

C. Approved equal.

2.02 GENERAL

A. Manufacture control panels in accordance with the general layouts, schedules, and details to suit the locations shown.

B. The instrumentation systems' manufacturer to completely design the panel structures, internal and external devices, equipment arrangement, wiring, and piping.

C. Provide control devices, control transformers, fuses, blown-fuse indicators, timing relays, control relays, selector switches, indicating lights, nameplates, terminal blocks, conductor markers, and miscellaneous materials as specified.

D. Flush mount all instruments, control devices, and similar equipment shown or required to be located on the face of the panels with no mounting screws or bolts protruding through the panel face beyond the covering area of the escutcheon.

E. Cleanly make cutouts for instruments in the manufacturer's shop. If a cutout is required for the fixed-mounted instruments, neatly work the cutout and trim in a flat black finish molded plastic material similar to the normal instrument escutcheons.

2.03 ENCLOSURES

A. General:
   1. Comply with the requirements of ANSI/NEMA ICS-6.
   2. Panel doors:
      a. Conceal hinges or piano hinges as applicable.
      b. Open at least 110 degrees.
      c. Provide each main door with a 3-point latching mechanism having roller latching at top and bottom and a vault-type-operating handle.
      d. Provide steel doors with turned edges and brace for rigidity.
   3. Provide a 1/8-inch thick neoprene gasket on the panel frame to give the door a firm closure against the panel.
   4. Provide mounting pans on the rear inner wall of the panel and also on the inner sides if any devices are to be located there.

B. Panel Classification: Unless otherwise indicated:
   1. Outdoor enclosures or in corrosive areas: NEMA 4X, nonmetallic.
   2. Class I, Division 1 or Division 2 areas are to meet the NEC requirement for that area.

C. Size:
   1. Minimum enclosure area: Unless otherwise indicated, height by width, twice the sum of the area of the individual components mounted on the back panel.
   2. Enclosure depth: Depends on the type of components used, but not less than 6 inches.

D. Finish and Color: In accordance with Section 16000.

E. Mounting:
   1. Unless otherwise indicated, provide the enclosures with provisions for wall mounting.

2.04 PANEL WIRING

A. Internal Wiring:
   1. Single conductor 90 degree C "SIS" wire with wire size in accordance with NFPA 70.
   2. Wireways:
      a. Interconnect major groups of devices mounted within the panel with wireways.
      b. The wireways may be EMT, 2-1/2 by 2-1/2-inch or 4-inch by 4-inch steel wireways.
      c. Provide PVC slotted-side panel wiring duct adjacent to relays.
      d. PVC slotted side panel wiring duct may also be used for control wire.
      e. Arrange the duct in horizontal configurations to pass near all relays and devices being fed from the duct.
      f. Header ducts: In general, steel wireways as specified above.
   3. Provide panel wiring with stranded cross-linked polyethylene fire-resistant insulation and fit with pressure-type connectors at all terminations.
   4. Provide milliampere and millivolt control and instrument signal wiring with stranded, pair-shielded polyvinylchloride insulated conductors as specified in Section 16120.
   5. Run control and instrument signal wiring separately from the alternating current circuits but, for short distances, it may be run in the same wireways.
   6. Neatly tie all wiring in position with nylon cable ties.
   7. Feed instruments with portable cord connections through the instrument panel plug strip located near the top of the panel directly above the instruments. Use only the specified type of miniature locking plugs and receptacles for this purpose. These instrument supply cords are the only panel wiring which may hang free.

8. Color code internal wiring as follows:

a.	Type	Color
b.	Power (120V AC)	Black
c.	Neutral	White
d.	Control	Red
e.	Foreign voltage	Yellow
f.	DC	Blue
g.	Ground	Green

B. Wire Markers:
   1. Provide in accordance with Section 16000.

C. Wiring Methods:
   1. Comply with UL 508.
   2. Provide plastic wireway with covers to route groups of wires.
   3. Provide plastic spiral wrap for exposed wires.
   4. Enclose wires that cross door hinge in plastic spiral wrap.

2.05 INSTRUMENT TUBING

A. Bundle all instrument tubing neatly with plastic cable ties or in tubing clips at intervals not exceeding 18 inches.

B. Neatly lay tubing taken out of bundles along the panel to the point where it bends out to feed the instrument connection.

C. Lay out tubing in parallel, rather than twisted, runs prior to bundling.

D. Color coded tubing is required.

2.06 CONTROL DEVICES

A. Provide in accordance with Section 16175.

2.07 INDICATING LIGHTS (Light Emitting Diodes)

A. All, per the following:

	Color	Function	Example
1.	Red	Run, open valve	Equipment operating, motor running
2.	Green	Ready, closed valve	Equipment ready, end of cycle
3.	White or clear	Normal condition	Control power on, status OK
4.	Amber (yellow)	Automatic	Equipment control in automatic position

2.08 ALARM AND MALFUNCTION DETECTION

A. Provide devices which are used to directly detect or signal alarm or malfunction conditions with an external manual reset.

B. Provide all devices or relays that are required to provide an external indication of malfunction, or status to a remote system, with an isolated dry NEMA Form C contact in addition to any contacts required for use by the internal control system.

C. If the device contact is required for internal equipment control as well as to signal alarm or malfunction conditions, then the manufacturer may make the reset function a part of the manufacturer's equipment master shutdown system. However, show each source of shutdown by local trouble lights which are manually reset at the equipment control panel.

D. Alarm or malfunction output contacts to open and remain open until manually reset when equipment is shut down due to malfunction.

E. Trouble contacts not to indicate abnormal conditions when the equipment has been manually shut down.

F. Initiate alarm and malfunction signals by a contact opening.

2.09 DEVICES WITH MOTOR STARTERS AND CONTACTORS

A. Equipment provided with control devices having motor starters or contactors, shall comply with the following additional requirements:
   1. Disconnect switches:
      a. Provide equipment with a disconnect switch and switch padlock hasp in accordance with WAC 296-24.
      b. Disconnect: Horsepower rated disconnect switch or molded case circuit breaker, except that a manual motor starter may be used for drives less than 2 kVA.
      c. Provide horsepower rated disconnect switches for equipment 2 kVA or greater with UL Class RK1 fuses.
      d. Circuit breaker interrupting ratings: Unless otherwise indicated, 10,000 symmetrical amperes for service at 240V or below and 22,000 symmetrical amperes for service above 240V.
      e. When the disconnecting device is not a circuit breaker or fused disconnect, provide adequate overcurrent and short circuit protection for the circuit feeding the disconnecting device.
   2. Overload protection: Provide protection for full motor running overload in ungrounded conductors for motors.
   3. Overload relay contacts:
      a. Do not connect overload relay contacts in the line having provision for grounding.
      b. Provide grounding connections in the unfused side of control circuits and connect.
   4. Power:
      a. Supply power at one voltage as shown or specified.
      b. Derive additional voltage requirements, such as 120V control power, from transformers provided internal to the control device as required.
      c. Rate each control power transformer at least 150 percent of the calculated maximum load it serves.

2.10 ANALOG INSTRUMENTATION

A. Equipment required to provide analog signals to the process control system specified in Division 17 to provide such signals as an isolated (ungrounded), 4-20 mA DC signal, linearly proportioned to the value of the measured variable.

B. Equipment required to accept analog command signals from the process control system specified in Division 17 to accept externally powered 4-20 mA DC signals. The equipment's input terminals for command signals to be ungrounded and present not more than 250 ohms of resistance to the command signal.

2.11 TERMINAL BLOCKS

A. Rated 20 amperes.

B. Channel-mounted tubular screw type with pressure plate.

C. Mount assembly on channel standoffs.

D. Provide 15 percent spare terminals available for future use.

2.12 SPACE HEATER AND THERMOSTAT

A. Provide a space heater and thermostat near the bottom of each panel section and for each 3 feet of length on large panels.

B. Space Heater:
   1. Rated 240 volts, 200 watts, but operated at 120 volts (50 watts).
   2. Mount on porcelain standoff insulators at least 1/2 inch from the supporting surface.
   3. Connect the heater to a control transformer furnished with the panel.

4. Provide an expanded metal guard to completely cover the heater and to allow free air movement.
5. Acceptable manufacturer:
   a. Chromalox Type PT-AC-1.
   b. Electromode.
   c. Approved equal.

C. Thermostat:
1. Mount at mid panel height.
2. Acceptable manufacturers:
   a. Fenwall Cat. No. 30,000-0.
   b. Honeywell.
   c. Approved equal with standoff and Type 62 mounting bracket.

2.13 LABELING AND NAMEPLATES

A. Labeling:
1. Label local control panel components to match the description on the elementary diagram. Label internal components of the local control panel on the back side of the door with the same description used on the front side.
2. Permanently mark label on or near each component. Machine embossed, adhesive backed nameplates shall identify the tag number of equipment inside cabinets.

B. Nameplates: Identify external door-mounted components and the local control panel description with plastic nameplates in accordance with Section 16000.

2.14 GROUNDING

A. Ground all neutrals to the mounting plate using a copper bus or grounding lug. Use a grounding lug for a size No. 2 AWG bare copper conductor to ground the panel to the plant's grounding system.

PART 3 EXECUTION

3.01 GENERAL

A. Alternating Current Control Circuits:
1. 120 volts or less and grounded.
2. Connect one terminal of each load device to the grounded conductor.
3. Place control contacts, including overload device contacts, in the ungrounded side of the circuit.

B. Use thermal overload relays in ungrounded conductors supplying a motor.

C. Ground the panel to the plant grounding system shown on the Drawings.

D. Provide conduit, wiring or mounting of devices not shown on the electrical or instrumentation Drawings, but required for a complete and operable system.

3.02 ASSEMBLY

A. Conform to the requirements of UL 508.

B. Test the functional operation of the local control panel prior to shipment.

3.03 INSTALLATION

A. Install all wiring and tubing crossing hinges in a manner that will prevent chafing.

B. Securely clamp bundles of similar conductors to the door and to the panel, and run the bundles parallel to the hinge for at least 12 inches.

C. Use spiral nylon cable wrap in the hinge section of the bundle to fully protect the conductors or tubing against chafing.

3.04 GROUNDING

A. Bond hinged or sliding pans, racks, and drawers to a ground bus by means of tinned-copper woven flat braid having a rating of at least 50 amperes.

B. Ground Bus: 1/4 inch by 1 inch minimum of suitable length for all conductor terminations and connected to the motor control center or station ground bus with No. 2 AWG copper, green insulated cable for all freestanding panels.

C. The ground connection to the central ground bus may be run with other cables in an appropriate conduit in the case of small wall-mounted panels.

D. Ground Connection: Not less than No. 10 AWG or as shown.

END OF SECTION

SECTION 16450

GROUNDING SYSTEM

PART 1 GENERAL

1.01 SUMMARY

A. This Section specifies the system for grounding electrical equipment, exposed non energized metal surfaces of equipment, and metal structures.

1.02 QUALITY ASSURANCE

A. Referenced Standards: This Section incorporates by reference the latest revision of the following documents. These references are a part of this Section as specified and modified. In case of conflict between the requirements of this Section and those of the listed documents, the requirements of this Section shall prevail.

Reference	Title
IEEE 81	Guide for Measuring Earth Resistivity, Ground Impedance, and Earth Surface Potentials of a Ground System
NFPA 70	National Electric Code (NEC)

B. Comply with requirements of NEC Article 250.

1.03 SUBMITTALS

A. Procedures: Section 01300.

B. Product Data.

C. Ground resistance readings.

PART 2 PRODUCTS

2.01 GROUND CABLE

A. Annealed bare copper, concentric stranded as specified. If cable sizes are not specified, the minimum sizes shall be as follows:

1.	15kV - 480V transformer	250 MCM
2.	15kV Load Interrupter	4/0 AWG
3.	480V switchgear	4/0 AWG
4.	480V MCC and switchboards	2/0 AWG
5.	Lighting panels	1/0 AWG
6.	Exposed metal	2 AWG

2.02 GROUND RODS

A. Copper covered steel, 3/4-inch diameter and 10-feet long.

B. Rods shall have threaded type removable caps so that extension rods of same diameter and length may be added where necessary.

2.03 COMPRESSION CONNECTORS

A. Cast copper.

B. Acceptable Manufacturer:
   1. Thomas and Betts.
   2. Burndy
   3. Approved equal.

2.04 BOLTED CONNECTORS

A. Acceptable Manufacturer:
   1. Burndy.
   2. O. Z. Gedney.
   3. Approved equal.

2.05 EXOTHERMIC CONNECTORS

A. Acceptable Manufacturer:
   1. Thermoweld.
   2. Cadweld.
   3. Approved equal.

PART 3 EXECUTION

3.01 GENERAL

A. Make embedded and buried ground connections by compression connectors utilizing diamond or hexagon dies. Use a hand compression tool for wire sizes 2/0 AWG and smaller and a hydraulic pump and compression head for wire sizes larger than 2/0 AWG.

B. Tools and dies:
   1. Approved for purpose used.
   2. Dimple compressions are not acceptable.

C. Prepare compression connections in accordance with the manufacturer's instructions.

D. Unless otherwise indicated, make exposed ground connections to equipment by bolted clamps.

E. Do not use solder in any part of the ground circuits.

F. Cables:
   1. Securely attach embedded ground cables and fittings to concrete reinforcing steel with tie wires and prevented from displacement during concrete placement.
   2. As each part of the grounding system below finished grade is completed, notify the Project Representative a minimum of four hours prior to backfilling.

G. Extensions:
   1. Extend grounding conductors that are extended beyond concrete surfaces for equipment connection a sufficient length to reach the final connection point without splicing.
   2. Minimum extensions: 3 feet.

H. Conductors:
   1. Locate grounding conductors that project from a concrete surface as close as possible to a corner of the equipment pad, protected by conduit, or terminated in a flush grounding plate.
   2. Terminate grounding conductors for future equipment using a two-hole copper flush mounted grounding plate.
      a. Approved manufacturer: Cadwell, or approved equal.
   3. Support exposed grounding conductors by non-corrosive metallic hardware at 4-foot intervals or less.
   4. Ground conductors, except signal conductor shields entering enclosures: Bonded together to the enclosure if it is metallic and to metallic raceways within or terminating at the enclosure.
   5. Grounding conductor shall not be used as a system neutral.

I. Use compression-type lugs in accordance with manufacturer's recommendations.

J. Directly connect lightning arresters to the ground system using copper conductors, sized as specified.

K. Metallic sheaths or shields of shielded power cable: Terminated by a copper grounding strip provided with cable connection for connection to the grounding system.

L. Prior to making ground connections or bonds, clean metal surface at the point of connection.

M. For all control devices with sealed cable connection, include a ground conductor in the control cable.

3.02 RACEWAY GROUND

A. Metallic conduits:
   1. Assembled to provide a continuous ground path and bonded using insulated grounding bushings.
   2. Bond using insulated grounding bushings.

B. Non-metallic conduits: Insulated ground conductor sized in compliance with the NEC.

C. Grounding bushings: Connected to the grounding system using conductors sized in compliance with NFPA 70.

D. Every conduit shall contain an insulated green ground conductor sized in compliance with NEC.

3.03 EQUIPMENT AND ENCLOSURE GROUND

A. Connect electrical and distribution equipment to the grounding system. Cables sized as specified.

B. Connect non-electrical equipment with metallic enclosures to the grounding system.

C. Securely bond transformer yard fences and gates as specified.

3.04 ISOLATED GROUNDING

A. Where the manufacturer of equipment supplied from 120 volt instrument power panels requires an isolated ground, provide an additional isolated ground conductor from the equipment through the instrument power panel for connection to a single point ground bus in the automatic transfer switch enclosure.

B. Conductor: Green insulation with a yellow stripe and run in the same raceway as the power and neutral conductors.

C. Neutral conductor from the ultra-isolation transformers: Grounded only at the single point ground bus in the automatic transfer switch.

3.05 GROUNDING SYSTEM TESTS

A. Test per IEEE 81, each grounding connection to determine the ground resistance.

B. Submit a plot of ground resistance readings for each isolated ground rod or ground mat on 8-1/2 by 11 inch size graph paper.

C. Current reference rod: At least 100 feet from the ground rod or grid under test.

D. Make measurements at 10-foot intervals beginning 25 feet from the test electrode and ending 75 feet from it, in direct line between the ground rod or center of grid and the current reference electrode.

E. Consider a grounding system that shows greater than two ohm resistance for the flat portion of the plotted data inadequately grounded. Add additional parallel connected ground rods and/or deeper driven rods until the ground resistance measurements meet the two ohm or less requirement.

F. Use of salts, water, or compounds to attain the specified ground resistance is not acceptable.

END OF SECTION

SECTION 16470

LIGHTING AND POWER DISTRIBUTION PANELBOARDS

PART 1 GENERAL

1.01 SUMMARY

A. This Section specifies panelboards for lighting and power distribution.

1.02 QUALITY ASSURANCE

A. Referenced Standards: This Section incorporates by reference the latest revision of the following documents. These references are a part of this Section as specified and modified. In case of conflict between the requirements of this Section and those of the listed documents, the requirements of this Section shall prevail.

Reference	Title
NFPA 70	National Electrical Code (NEC).
UL 50	Enclosures for Electrical Equipment
UL 67	Panelboards
UL 489	Molded-Case Circuit Breakers, Molded-Case Switches, and Circuit Breaker Enclosures

1.03 SUBMITTALS

A. Procedures: Section 01300.

B. Product Data:
   1. Manufacturer's certification that bus bracing is capable of withstanding the specified short circuit condition.
   2. Quantity and rating of circuit breakers for each panel board.
   3. Applicable operation and maintenance information.

1.04 SCHEDULE

A. Panelboards: Scheduled on the Drawings.

PART 2 PRODUCTS

2.01 GENERAL

A. Panelboards: Packaged Load Center
   1. Square D Mini Power Zone or approved equal
   2. 22,000 AIC interrupting rating.
   3. 480 volt input, 120/240 volt single phase output
   4. NEMA 3R
   5. 5 KVA
   6. 10 single pole branch circuit breakers, bolt on type

B. Acceptable Manufacturer:
   1. Square D.
   2. Eaton.
   3. Approved equal.

2.02 ARRANGEMENT AND CONSTRUCTION

A. Per Square D Mini Power Zone or approved equal specifications

2.03 BUS

A. Per Square D Mini Power Zone or approved equal specifications.

2.04 CIRCUIT BREAKERS

A. Circuit Breakers: Molded-case type provided for the current ratings and pole configurations specified on the drawings.

B. Rated 120/208 Volt and 120/240 Volt Alternating Current: Minimum interrupting current rating of 10,000 amperes (symmetrical) at 240V AC.

C. Rated 480 Volt Alternating Current: Unless otherwise indicated on the panelboard schedule, a minimum interrupting current rating of 22,000 amperes (symmetrical) at 480V AC.

D. Bolt-on Type.

E. Listed in accordance with UL 489 for the service specified.

F. Load Terminals: Solderless connectors.

2.05 PANELBOARD FINISH

A. Cabinet: Fabricated from hot-dip galvanized steel in accordance with UL 50.

B. Fronts: ANSI 61 - gray, baked enamel finish.

2.06 NAMEPLATES

A. Nameplates: Provided in accordance with the requirements of Section 16000.

PART 3 EXECUTION

3.01 GENERAL

A. Type in the circuit description on the circuit directory or panelboard schedule.

3.02 TESTING

A. Test for proper operation and function per Section 16000 and 16030.

3.03 SCHEDULE

A. Panelboards are scheduled on the Drawings.

END OF SECTION

SECTION 16500

LIGHTING FIXTURES

PART 1 GENERAL

1.01 SUMMARY

A. This Section specifies lighting fixtures.

1.02 QUALITY ASSURANCE

A. Referenced Standards: This Section incorporates by reference the latest revision of the following documents. These references are a part of this Section as specified and modified. In case of conflict between the requirements of this Section and those of the listed documents, the requirements of this Section shall prevail.

Reference	Title
ANSI /IEEE C62.11	Metal-Oxide Surge Arresters for Alternating Current Power Circuits
ANSI/IEEE C62.41	Recommended Practice for Surge Voltages in Low-Voltage AC Power Circuits
ANSI /IEEE C82.1	Ballasts for Fluorescent Lamps
NFPA 70	National Electrical Code (NEC)
UL 1570	Fluorescent Lighting Fixtures
UL 1572	High Intensity Discharge Lighting Fixtures

1.03 SUBMITTALS

A. Procedures: Section 01300.

B. Large scale photometric charts for each fixture type.

C. Catalog information describing fixture make, materials, and dimensions.

D. Product Data.

PART 2 PRODUCTS

2.01 LIGHTING MATERIALS

A. Unless otherwise indicated, lighting materials, including fixtures, accessories, and hardware conform with LIGHTING FIXTURE SPECIFICATION SHEETS (LIGHTSPECs) in this Section.

2.02 BALLASTS

A. Fluorescent: conform to the following:
   1. Type: Electronic instant start, to provide maximum efficacy (lumens per watt).
   2. Lamp wiring: Parallel, such that if one lamp fails, others remain lit.
   3. Front end circuitry: Passive, to minimize inrush current. Active front ends with high inrush currents will not be accepted.
   4. K-Factor: Less than 2.0.
   5. Total harmonic distortion: Less than 20 percent.
   6. Ballast factors: 0.90 minimum for instant start; 1.20 for high output.
   7. Minimum starting temperature: 0 degrees F for all locations.
   8. Maximum case temperature: 70 degrees C.
   9. Lamp current crest factor: Less than or equal to 1.7 for instant start and high output, operating the lamps within ANSI C82.1 parameters.
   10. Minimum output frequency: 20 kHz and no visible flicker.
   11. Minimum power factor: 0.97.
   12. Withstand line transients: As defined in ANSI/IEEE C62.11.
   13. Sound rating: Class A or quieter.
   14. Contain no PCBs.

15. Electromagnetic and radio frequency interference: Comply with FCC regulations.
16. UL listed, Class P, Type 1.
17. Regulation: Within +/-10 percent voltage range of rated input voltage; light output variation within +/-10 percent.
18. Acceptable Manufacturers:
    a. Osram Sylvania "Quicktronic".
    b. GE Lighting, "Ultramax".
    c. Approved equal.

2.03 LAMPS

A. General:
   1. Lamps: Per LIGHTSPECs.
   2. Fluorescent: Unless otherwise indicated, warm white, mercury vapor lamps, phosphor-coated, deluxe white.
   3. LED engine and driver as specified in LIGHTSPECs

B. Acceptable Manufacturer:
   1. General Electric.
   2. North American Philips (Norelco).
   3. Osram Sylvania.
   4. Venture Lighting International.
   5. Approved equal.

2.04 PHOTOELECTRIC CELL UNITS

A. Cadmium sulfide cell housed in a plug receptacle assembly.

B. Plug receptacle assembly: Three-prong polarized locking type, suitable for outdoor mounting and rated for 1800 VA at 120V maximum capacity.

2.05 PRODUCT DATA

A. Polar plots on 8-1/2 by 11 inch paper providing candlepower vs. angle and foot-lamberts (brightness) vs. angle for longitudinal and transverse axis.

B. Applicable operation and maintenance items per Section 01730.

2.06 SPARE PARTS

A. None.

PART 3 EXECUTION

3.01 GENERAL

A. The location, type, and number of fixtures and receptacles are shown on the Drawings. Unless specifically detailed, the information is diagrammatic.

B. Plan and layout work to avoid interferences with other Contract work. If unavoidable conflict, notify the Project Representative.

C. Raceways and wire from the fixtures, switches, and receptacles to the lighting panel per the NEC.

D. Raceways: Per Section 16110.

E. Wire: Per Section 16120.

F. Splice circuit conductors in a separately mounted junction box for fixtures labeled to require conductors with a temperature rating exceeding 75 degrees C.

G. Connect fixture to junction box using conduit with a temperature rating equal to that of the fixture.

H. Photoelectric cells: Orient toward the north.

I. Remove labels and marks, except the UL label, from exposed parts of the fixtures.

J. Clean fixtures.

K. Align and direct fixture to illuminate an area as specified.

L. Directly and rigidly mount on supporting structures.

M. Unless otherwise indicated, do not use fixtures to support conduit system.

N. Treat weld area with rust-resistant primer and finish paint where brackets or supports for lighting fixtures are welded to steel members.

O. Underground and outdoor wire splices per Section 16120.

3.02 FIXTURE SCHEDULE

A. General:
   1. Drawings indicate the general characteristics of the required fixtures.

B. LIGHTSPEC
   1. Lamp codes specified on LIGHTSPEC sheets are Osram Sylvania designations.
   2. Do not use catalog numbers given on the LIGHTSPECs for selection of mounting hardware, but only as a reference to the type of fixture required.
   3. Contains the following Family groups of fixtures:
      a. LEDH--LED, Classified location.
      b. FP--Fluorescent, fully enclosed.

Family group:	LEDH - LED, classified location (Hazardous).
Group description:	LED unit, corrosion-resistant.
Family member:	Enclosed and gasketed type designed to exclude dirt, moisture and corrosive vapors from the interior of the luminaires and conduit system. The fluted globe and guard assembly is installed or removed as a unit for ease of relamping.
Fabrication:	Materials: Copper-free aluminum bodies and guards, heat and impact resistant fluted globe.
	Finish: Epoxy powder coat bodies and guards.
Lighting:	Distribution: general.
LED Lighting Engine & Driver:	High output LEDs, 45 watts, 50k hours to 70% initial lumens, 5000K color temperature, CRI 69 or greater, power factor greater than 0.90, THD <20% at full load, FCC 47CFR Part 15 Class B Compliant, thermal range -40°C to 55°C.
Electrical:	Input voltage: 120.
Mounting:	Ceiling or wall mounted with cast junction box and globe guard.
Acceptable manufacturer:	Hubbell HLEML Series, or approved equal.

Family group:	FP--Flourescent, fully enclosed.
Group description:	Fluorescent, fully enclosed lens.
Family member:	FP1: Two 4-foot lamps, nominal 7-inches wide by 4-foot.
Fabrication:	Housing: fiberglass rated for flame and weather resistance.
	Finish: white high gloss.
Lighting:	Distribution: general downlight.
	Reflector: baked white enamel.
	Shielding: 100 percent acrylic prismatic, UV resistant, impact resistant, injection molded diffuser with frosted ends.
Lamps:	Energy saving, T-8, 32 watt.
Electrical:	Input voltage: 120.
	Ballasts: octic type for 265 milliamp T-8 lamps, ultra-premium grade, electronic, instant cold start.
Mounting:	Ceiling / Surface mount
Acceptable manufacturer:	HE Williams Series 97 or approved equal.

END OF SECTION

SECTION 17200

MAGNETIC FLOW METERS

PART 1 GENERAL

1.01 SUMMARY

A. This Section specifies the following magnetic flow meters:
   1. The replacement 20-inch diameter meter for PS-6.
   2. The 4-inch diameter meter for PS-10.

1.02 SUBMITTALS

A. Procedures: Section 01300.

B. Product technical data.

C. Operation and maintenance information: Section 01730.

PART 2 PRODUCTS

2.01 ACCEPTABLE MANUFACTURER

A. Toshiba. LLC.
   1. Local Distributor: Axiom Northwest. (425) 576-9123

B. No Substitutes.

2.02 FLOW METER EQUIPMENT

A. Flow Meter
   1. Model Numbers:
      a. PS-6 20-inch meter: LF4505MCBEJAAB
      b. PS-10 4-inch meter: LF654JM1BNCAAF
   2. Carbon steel, 150 lb. flanged, flow tube.
   3. Lining:
      a. PS-6: Rubber.
      b. PS-10: Polyurethane
   4. Stainless steel electrodes and grounding rings.
   5. Factory Mutual Class 1, Division 2
   6. Potting kit for sealing cable connection against leakage.

B. Converter
   1. Model Number:
      a. LF622FAC211E (both stations).
   2. Remote mount, LCD display
   3. 4-20 mA DC (with the standard Hart protocol)
   4. Pulse output.
   5. 120 V, single phase, 60 Hz.
   6. NEMA 3R lockable enclosure.
   7. Surge suppression device.

C. Signal Cable.
   1. Shielded cable between meter and converter.
   2. Length:
      a. PS-6: 90 ft.
      b. PS-10: 30 ft.

D. Excitation Cable:
   1. Toshiba excitation cable between meter and converter.
   2. Length as indicated for signal cable.

PART 3 EXECUTION

3.01 INSTALLATION

A. Comply with the Contract Documents, shop drawings, and manufacturer's installation instructions.

B. PS-6:
   1. The existing 20-inch diameter magnetic flow meter and associated cabling are to be removed and disposed of by the Contractor.
   2. The new signal and excitation cables are to be pulled through the existing conduit between the existing control panel and the meter vault.
      a. The flow meter manufacturer/distributor is responsible for providing new cabling that will fit the existing buried conduit.
      b. No additional compensation will be provided if smaller diameter cabling (as compared to the manufacturer’s standard) must be provided.
   3. See the PS-6 electrical drawings for further details.

C. PS-10:
   1. See the PS-10 electrical drawings for further details.

END OF SECTION

APPENDIX C

PS-10 REHABILITATION PHOTOS

Note:

These photos provide general information regarding the condition of the existing facilities and the work requirements included under this Contract. The Contract Drawings and Specifications contain the details of the work referred to in this appendix. Bidders have the opportunity to view the existing pump station during the Pre-Bid Meeting (See the Invitation for Bids).

PS-10 Rehabilitation

Pump Station 10 is a 6-ft diameter, approximately 17 ft deep submersible pump station on Industry Drive East, serving a commercial/ industrial area (constructed in 1981). It is located in a landscaped area approximately 20 feet wide between the road and a trucking company parking lot. The existing pumps are 1-1/2 hp non-clog submersible pumps (275 gpm @ 12.5 ft TDH). These pumps are being replaced with 5 hp recessed impeller submersible pumps (250 gpm @ 18 ft TDH).

With the exception of the wetwell manhole, almost all of the existing pump station components and structures at this site are being replaced under this project. The cover slab over the existing wetwell will be replaced with a slab that provides a full-width hatch for better access to the pumps.

PS-10 is currently served with 120/208 V, three phase power. The station has a step-up transformer to produce 480 V, three phase power for the existing pumps. This project completely replaces the existing electrical equipment at this site, including replacing the 120/208 V service with a 480 V service. The existing electrical service is being abandoned and a new transformer is being located on the west side of the site to provide the 480 V service.

Bypass Procedure

Two 8-inch diameter gravity sewers enter the wetwell. The approach for bypassing the sewage flow is shown in the Contract Drawings. The influent flow is to be routed to bypass pumps that are to be located in the 10 ft wide utility easement in the parking area immediately north of the site. The Contractor is to make separate arrangements with the property owner for the temporary use of the parking area north of the easement for other Contractor equipment, parking, and staging area. The Contractor is to expose the existing 6-inch diameter forcemain on the west side of the site, cut the forcemain and install a suitable restrained coupling on the exposed end for the connection of the bypass pump discharge line.

Figure 10A. The existing electrical equipment is mounted on a plywood board. The existing wetwell access hatch is just visible (blue). The wetwell structure is being retained however the cover slab is to be replaced.

Figure 10B. A view of the pump station looking northwest, showing the opposite side of the electrical equipment mounting board. The site is to be cleared and grubbed, and the grades are to be lowered to eliminate the berm. The finished grading at the site will slope gradually to Industry Drive to the south (left).

Figure 10C. A view of the site looking south east. The City has used its vactor truck to excavate across the site at a depth of approximately 4 ft. however this was not deep enough to locate many of the utilities shown on the existing site plan (Dwg C-101A). A truck parking area borders the site on the north side. The truck wheels have caused significant damage to the existing curb as shown here.

Figure 10D. The pipelines located by the City are marked with white stakes. (L to R): A 2-inch water line (to be abandoned under this project), a 4-inch primary power conduit (to be relocated under this project), and a 2-inch power conduit serving the existing pump station (to be abandoned under this project).

Figure 10E. The existing junction box for transitioning from submersible to conventional power cabling is located within the wetwell. This project will provide a new handhole on the north side of the wetwell.

Figure 10F. The existing wetwell is 6-ft diameter and approximately 17-feet deep. The existing 4-inch diameter pump discharge piping will be completely replaced, with the exception of the wall pipe spools.

Figure 10G. A swing check valve is installed on the outlet of the 4-inch diameter drain from the existing vault. This drain connection is to be abandoned, and a new drain connection from the new valve vault is to be installed approximately 1'-4" below the existing drain pipe spool (which is to be capped and abandoned).

Figure 10H. Groundwater leakage through the manhole wall is evident in this photo (the rust colored wall area). Chemical injection grouting is to be used to seal leakage areas per Specification 02658. This Force Account for Coating Work is to follow the procedures outlined in Specification 01020. The concrete and metal surfaces in the wetwell are to be prepared and coated in accordance with Specification 09900.

Figure 10I. This photo was taken during the City's potholing across the site to locate existing buried utilities. The manhole access shown is for the existing valve vault, which is approximately 9 ft deep. The existing vault is to be replaced with a new vault that will require an excavation approximately 10 ft deep (includes the structural foundation material) and is to be located immediately adjacent to Industry Drive. The Contractor is to submit shoring plans and calculations for this excavation, to protect the subgrade of Industry Drive, as well as a 12-inch water line that runs parallel to the curb approximately 3-4 feet away in this area.

The Contractor is also to submit a Groundwater Control Plan to include a description of the dewatering system for maintaining ground water levels 1 ft below the excavation bottom. No groundwater investigation has been conducted at this site, although Fife is located in a low-lying area that has high ground water levels during most of the year.

Figure 10J. This is a photo of the existing piping within the existing valve vault (to be demolished under this project). The drain from the vault back to the wetwell does not function adequately due to the restriction caused by the swing check valve on the end of the drain, as discussed in a previous photo. Refer to the Contract Drawings for the design of the drain line from the new vault. The new drain line is to be extended below the low water level in the wetwell to provide a water seal against odors.

APPENDIX D

PS-5 WETWELL COATING PHOTOS

Note:

These photos provide general information regarding the condition of the existing facilities and the work requirements included under this Contract. The Contract Drawings and Specifications contain the details of the work referred to in this appendix. Bidders have the opportunity to view the existing pump station during the Pre-Bid Meeting (See the Invitation for Bids).

Wetwell Coating , PS-5

PS-5 is located on the corner of 20th St E and 20th St Dr. BNR tracks and ROW are located to the south of the pump station, and an industrial property is located to the north. PS-5 pumps all the flow from the City's collection system on the south side of Interstate 5 to the City of Tacoma's sewer system.

The influent line to the pump station is a 36-inch diameter reinforced concrete pipe (RCP) that discharges into the four foot wide influent channel to the wetwell. A 36-inch square opening fitted with a slide gate (normally open) controls flow into the active wetwell. A temporary wall is located immediately downstream of the outlet into the active wetwell, to isolate the future portions of the influent channel and hence the future wetwell from the influent flow.

The active wetwell contains three submersible pumps and the future wetwell contains space for two additional submersible pumps. The City will remove the existing pumps and electrical cabling from the station after the Contractor installs and activates the sewage bypass system.

Bypass Procedure

A 7 ft diameter manhole located in 20th St E approximately 130 ft east of the pump station, with an invert approximately 14.1 feet below grade, is at the upstream end of the 36-inch influent sewer and will be used as the sewage bypass manhole. The Contractor is to install temporary suction piping within the bypass manhole, and install buried suction piping to the area south of 20th St E, where the bypass pumps are to be located, as shown in the Contract Drawings. The discharge line from the bypass pumps is to be routed to the valve vault and connect into the end of the 20-inch diameter discharge manifold as shown in the Contract Drawings. After the bypass system has been constructed, the 36-inch gravity sewer outlet in the bypass manhole is to be plugged and the bypass system activated. At the conclusion of the rehabilitation work, the temporary suction piping is to be removed, the pipe spools installed in the manhole wall are to be plugged, and the road and sidewalk are to be restored. Further requirements for the sewage bypass are shown in the Contract Drawings and discussed in Section 02105 Temporary Sewage Bypass.

Figure 5A. PS-5 pumps directly into the City of Tacoma collection system. Access to the active wetwell is through the manhole on the east (closest) side of the cover slab. Access to the active influent channel is through the manhole on the south (left) side of the cover slab. The blowers for the wetwell aeration/mixing system are to be located adjacent to the north wall of the electrical equipment shelter.

Figure 5B. The proposed blower pad abuts the north (right) side of the electrical equipment enclosure. The 3" PVC air lines are to be routed to the west side of the valve vault (facing the electrical shelter).

Figure 5C. A 7 ft diameter manhole, located approximately 130 ft east of the pump station, will be used as the bypass manhole. The Contractor is to install a temporary 12-inch diameter PVC suction line in this manhole, and route a buried 12-inch diameter ductile iron pipe to above grade connections for the bypass pumps in the area south of the sidewalk. In addition, a six-inch diameter ductile iron pipe is to be routed from the manhole to this area for the high level alarm access.

Figure 5D. The 18-inch diameter PVC pipe is the discharge of the PS-6 forcemain into the east side of the bypass manhole. Flow exits the manhole at the top of the space shown, via a 36-inch diameter RCP to PS-5. The temporary 12-inch diameter PVC suction line is to be located on the south (left) side of the bypass manhole.

Figure 5E. The bypass pumps (a primary and a backup) are to be located to the south (left) of the sidewalk. Temporary pump discharge piping (diameter as determined by the Contractor) is to be routed to the pump station site along the south side of the sidewalk, across the drainage channel, across the access road, and around the west side of the station, to connect to the discharge manifold in the valve vault.

Figure 5F. The temporary bypass pipe across the access road is to be buried and plated. A 16" and a 6" gas line traverse this area, and are to be located prior to excavation for the bypass pipe (See Contract Drawings).

Figure 5G. The temporary bypass pipe is to connect to the existing 20-inch diameter discharge manifold at this blind flange location. The existing piping in the valve vault is to be coated with high-build epoxy. The existing grating shall be removed and turned over to the City for installation after the completion of the pipe coating work.

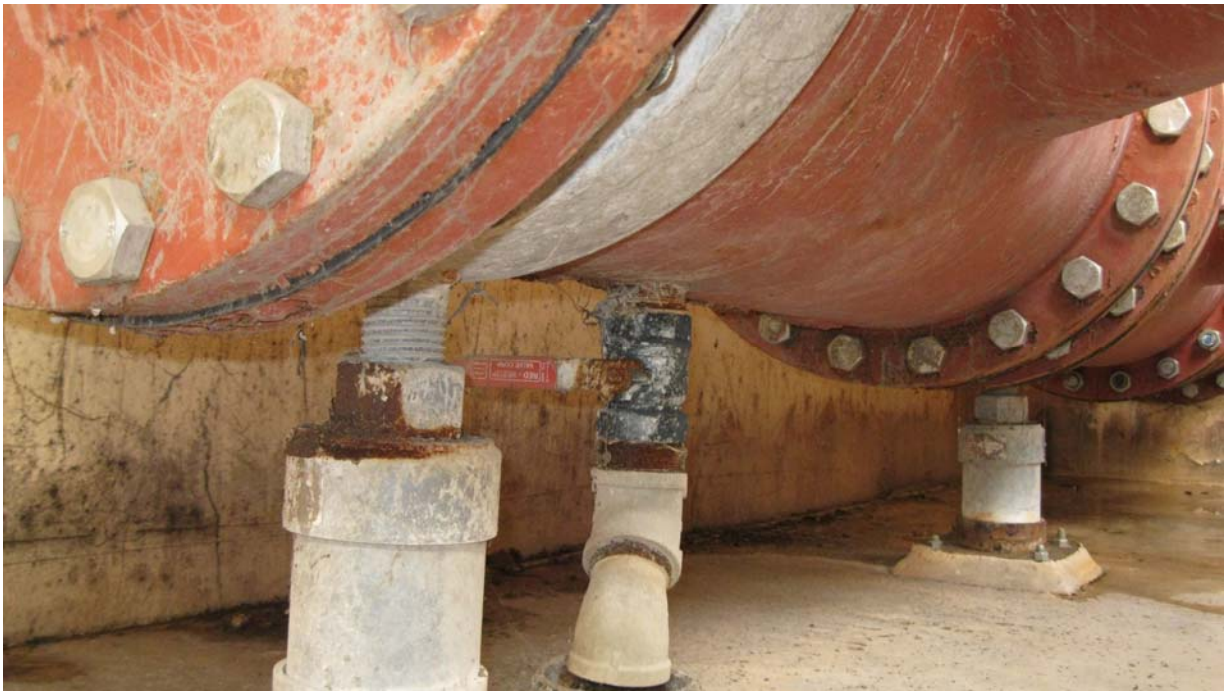

Figure 5H. The forcemain can be drained via the 2-inch diameter drain valve shown here. The pump stands and small diameter ferrous piping in the valve vault are also to be coated.

Figure 5I. The City will vactor the remaining sewage out of the wetwell after the Contractor has installed and initiated temporary bypass pumping. The existing polyurea coating is showing a significant amount of bubbling at the lower levels of the wetwell, near the operating level. The Contractor shall then spray wash and clean the surfaces of the wetwell to provide sanitary conditions for the coating removal work.

Figure 5J. The existing polyurea coating shows many areas that were patched during the original construction. The surface areas of existing concrete coating and the metals (piping and supports) to be prepared and coated is shown in a table in the Contract Drawings.

Figure 5K. The coating has failed along the edges of the 36" x 36" opening in the divider wall between the current and future portions of the wetwell. Note the deterioration of the exposed edges of the opening, which are to be repaired with concrete mortar prior to coating.

Figure 5L. This is a photo of the coating on the underside of the cover over the active wetwell. The staining is from exposure to the high hydrogen sulfide content of the wetwell atmosphere.

Figure 5M. The ductile iron discharge pipe from each pump is to be sandblasted and coated with high-build epoxy.

Figure 5N. The 4-inch diameter drain line from the meter vault discharges into the wetwell via this ductile iron flap gate valve. The flap gate valve is to be removed, a 90-degree DI elbow installed, and a 4-inch diameter PVC drain line extended down to below the low water level in the wetwell. A similar drain from the valve vault into the wetwell is also to be extended down in this manner.

Figure 5O. This is a photo of the future portion of the wetwell, including a future pump discharge connection. The coating work in the future wetwell is the same as described for the active wetwell.

Figure 5P. The polyurea coating is in much better condition in the future portion of the wetwell, due to the less aggressive atmospheric conditions as compared to the active wetwell.

Figure 5Q. This is the 24-inch manhole access to the pump station influent channel. The embedded manhole frame and the underside of the cover are to be sand blasted and coated with high-build epoxy. Three other manholes in the cover over the station are to be similarly coated.

Figure 5R. This is a photo of the 36-inch diameter gravity sewer discharging into the pump station influent channel.

Figure 5S. The flow in the influent channel turns and enters the wetwell via a 36" x 36" opening. A stainless steel slide gate on the opposite side of the opening leaks badly when the gate is used to try to isolate the wetwell. The Contractor is to remove the slide gate, and turn it over to the City for repair. The Contractor is to re-install the slide gate following repair per Special Provision 8-30.

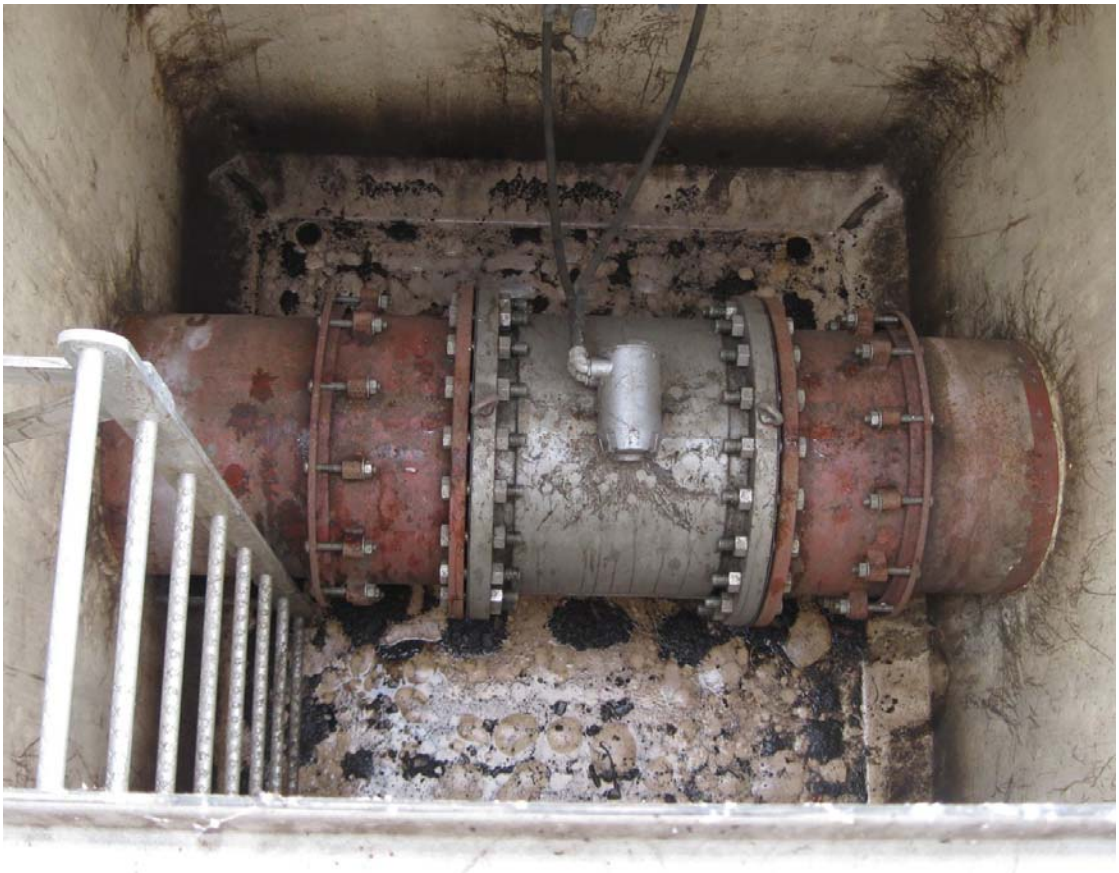

Figure 5T. The piping and magnetic flow meter in the meter vault are to be sandblasted and coated with high-build epoxy. Mask the electrical components as required to protect functionality. All ground water leakage areas in the meter vault and the wetwell are to be injection grouted and completely sealed (force account).

Figure 5U. Three 3" PVC air lines enter the west wall of the valve vault (on the right side of the photo). An air line will enter the future wetwell near the corner of the valve vault shown here, at the approximate elevation of the electrical conduit shown. The 1-inch electrical conduit is to be relocated approximately one foot lower with replacement conduit.

Figure 5V. The existing electrical conduit on the south wall of the valve vault only serves the flood switch alarm, via the vertical conduit down to the floor level shown in the center of the photo. The conduit to the east (left) of the vertical conduit is abandoned and is to be removed. The remaining conduit is to be lowered as discussed in the previous photo.

Figure 5W. The two 3-inch PVC airlines to the active wetwell are to be installed approximately 6-inches below the cover slab on the north (left) side of the vault, above the discharge manifold. These air lines are to be routed to the south wall of the vault below the beam between the two hatches shown here. The air lines are to enter the wetwell via cored openings at the approximate elevation of the existing electrical conduit (which is to be removed as discussed in the previous photo).

APPENDIX E

PS-6 WETWELL COATING PHOTOS

Note:

These photos provide general information regarding the condition of the existing facilities and the work requirements included under this Contract. The Contract Drawings and Specifications contain the details of the work referred to in this appendix. Bidders have the opportunity to view the existing pump station during the Pre-Bid Meeting (See the Invitation for Bids).

Wetwell Coating , PS-6

PS-6 is located along 20th Street E. in a densely developed commercial/industrial area. This station pumps the sewage flow from the south and eastern portions of the City via a 20-inch diameter forcemain to the manhole upstream of PS-5 discussed in the previous section. The design and layout of PS-6 is very similar to that of PS-5.

As discussed in the previous section for PS-5, PS-6 has a 36-inch diameter RCP influent pipeline that discharges into the influent channel to the wetwell. Flow from the influent channel to the active wetwell is through a 36-inch square opening fitted with a slide gate (normally open). A temporary wall is located immediately downstream of the opening into the active wetwell, to isolate the future portions of the influent channel and hence the future wetwell from the influent flow.

The active wetwell contains three submersible pumps and the future wetwell contains space for two additional submersible pumps. The City will remove the existing pumps and electrical cabling from the station after the Contractor installs and activates the sewage bypass system.

Bypass Procedure

An 8-ft diameter manhole, located in 20th St E approximately 20 ft north of the pump station at the upstream end of the 36-inch gravity sewer, with an invert approximately 18.5 feet below grade, will be used as the bypass manhole. The Contractor is to install temporary suction piping within the bypass manhole, and install buried suction piping to the landscaped area to the south of 20th St E between the pump station site and the sidewalk. The bypass pumps are to be located in the paved parking area to the west of the pump station. The discharge line from the bypass pumps is to be routed above grade to the valve vault and connect into the end of the 20-inch diameter discharge manifold.

After the bypass system has been constructed, the 36-inch gravity sewer outlet in the bypass manhole is to be plugged and the bypass system activated. At the conclusion of the rehabilitation work, the temporary suction piping is to be removed, the pipe spools installed in the manhole wall are to be plugged, and the road and sidewalk/curb and gutter are to be restored. Further requirements for the sewage bypass are shown in the Contract Drawings and discussed in Section 02105, Temporary Sewage Bypass.

Figure 6A. The two open hatches are over the active wetwell. The other open hatch is over the future portion of the valve vault. The City worker is about to open the hatch over the active portion of the valve vault. The meter vault is visible in the lower right.

Figure 6B. This photo shows the electrical equipment enclosure. The cover slab of the pump station is in the middle of the picture. The paved area in the foreground is the designated location for the Contractor's self-priming bypass pumps.

Figure 6C. The bypass manhole in 20th St E is shown in the center of the picture, looking north from the pump station site. The 36" influent line enters the wetwell in the northwest corner of the pump station, just visible here. The wood post is directly over the influent line.

The temporary buried DI suction pipe is to terminate with two 12-inch diameter above grade connections in the landscaped area just beyond the wood post for the temporary suction pipe from the bypass pumps (a primary and a backup pump).

The landscaped area is to be cleared and grubbed per the Contract Documents. Upon completion of the bypass pumping, the temporary buried piping is to be removed. The Contractor is to prepare damaged landscaped areas for a separate City landscaping contract with the addition of 6-inches of topsoil to these areas.

Figure 6D. The bypass manhole is 8 ft diameter and approximately 18.5 ft deep,with a flat cover slab and a 24-inch manhole cover. The existing polyurea coating is peeling off of the concrete manhole riser. Two forcemains (14-inch and 12-inch diameter PCV) enter the manhole on the opposite side from the manhole riser.

Figure 6E. The 14-inch and 12-inch diameter PCV forcemain discharge pipes are just visible in the east (left) side of the bypass manhole. Flow exits the manhole to the south (i.e., the top of the space shown), via a 36-inch diameter RCP to PS-6. The peeled polyurea coating in the riser is shown in the upper left of the photo. The temporary 12-inch diameter PVC suction line is to be located on the north side of the bypass manhole (i.e., the lower portion of the space shown).

Figure 6F. The temporary bypass pipe is to connect to the existing 20-inch diameter discharge manifold at the blind flange connection shown here. The existing piping in the valve vault is to be coated with high-build epoxy. Mask-off the pressure gages.

Figure 6G. A 2-inch diameter drain is located beneath the 20-inch diameter discharge manifold. The forcemain can be drained back to the wetwell via the drain valve. The galvanized pipe supports and drain line are to be coated with hi-build epoxy.

Figure 6H. The City will vactor the remaining sewage from the wetwell after the temporary sewage bypass system is installed and operating, and remove the pumps and electrical cable from the wetwell.

Figure 6I. The wetwell surfaces are to be cleaned to provide sanitary conditions prior to the removal of the existing polyurea coating from the concrete surfaces.

Figure 6J. A 3' x 5' aluminum hatch is located over each pump in the wetwell, and over the future pump locations in the future wetwell. This photo shows the polyurea coating peeling away from the hatch openings in the cover slab. After the existing polyurea coating is removed from the walls, floor, and ceilings of the wetwell, the concrete is to be washed to remove contaminates prior to any sandblasting.

Figure 6K. This is another photo showing the condition of the concrete coating in the active wetwell. The electrical cable shown will be removed by the City with the submersible pumps, after the station is taken off-line.

Figure 6L. The ductile iron pipe within the wetwell is to be sandblasted and coated with hi-build epoxy. The surface areas of existing concrete coating and the metals (piping and supports) to be prepared and coated is shown in a table in the Contract Drawings.

Figure 6M. This photo shows the wall penetrations of the 10" diameter ductile iron discharge pipes into the valve vault. In the foreground are the guide rails for a pump, which are to be protected from paint splatter (mask or temporarily remove). Following removal of the existing coating and sand blasting, the concrete surface is to be inspected for areas of leakage for chemical injection grouting as well as areas requiring concrete repair. Both these activities are to be paid for under a "Force Account for Coating Work" arrangement (See Specification 01020).

Figure 6N. The polyurea coating has failed in the area of the 36" x 36" opening in the wall between the active wetwell and the future wetwell (beyond the opening in this photo), leading to significant concrete corrosion damage to the exposed concrete. Concrete repair applies to the filling of surfaces of ½-inch depth or greater (See Specification 03700 for further details).

Figure 6O. A close-up of the damaged coating around the 36" x 36" opening in the wall between the active wetwell and the future wetwell. The edge of the repair area is to be saw-cut to a minimum depth of ½" and all concrete within the sawcut boundary is to be removed (See Specification 03700) prior to restoring the original shape of the concrete with concrete mortar. The Contractor is to record labor hours, equipment time, and materials used in the course of the repair per Section 01020, Force Account for Coating Work.

Figure 6P. The coating in the hatch openings is peeling away from the concrete surface.

Figure 6Q. The flap valve on the discharge of the 4-inch drain line from the meter vault has been removed. A new ductile iron 90 deg elbow (FL x FL) is to be installed on the drain outlet, and a 4-inch PVC drain line is to be extended down to below the low water level of the wetwell. Typical of two drains.

Figure 6R. This is the entrance of the 36-inch influent line in the 4 ft wide influent channel of the pump station. The polyurea coating is in bad condition and the concrete surfaces around the influent pipe may require repair (under Specification 01020, Force Account Procedures for Coating Work discussed previously).

Figure 6S. The polyurea coating on the wetwell influent channel walls is bubbled. The knock out wall separating the active portion from the future portion of the influent channel is shown to the right of the FRP ladder. The bottom support of the ladder has been damaged and is to be repaired under Concrete Repair, Specification 03700, and therefore paid for under Force Account Procedures for Coating Work (Specification 01020).

Figure 6T. The influent channel enters the wetwell through a 36" x 36" opening shown here. The coating along the edge of this opening has ruptured, and the coating edges are peeling away from the concrete. The concrete around the opening is heavily damaged and will be repaired per Specification 03700, Concrete Repair, as discussed previously.

Figure 6U. When the wetwell floods, sewage overflows the 36" x 36" opening in the divider wall and enters the future wetwell area (shown here). The concrete coating in the future wetwell is also to be removed and replaced with the fiber-reinforced epoxy system or the alternative polyurethane coating.

Figure 6V. This photo shows the existing polyurea coating on the walls in the future wetwell area. The existing FRP grating, grating supports, and ladders are to be cleaned, but not coated under this project.

Figure 6W. The blower pad for the wetwell aeration/mixing system is to be installed in this landscaped area adjacent to the east wall of the valve vault. Three buried 3-inch diameter PVC air lines are to enter the valve vault via new cored openings in the east wall. The landscaped area is to be cleared and grubbed per the Contract Documents. The Contractor is to prepare damaged landscaped areas for a separate City landscaping contract with the addition of 6-inches of topsoil to these areas, as discussed previously.

Figure 6X. Two 3-inch diameter PVC air lines are be routed through the valve vault, approximately 6-inches below the beam shown. The air lines are to be routed through new cored openings through the west wall of the vault 1'-6" below the beam shown, and enter the wetwell. The electrical conduit shown has been abandoned and is to be removed from this area.

Figure 6Y. The vertical conduit to the left of the ladder serves a flood switch, which is to remain. The conduit to the right of this branch has been abandoned and is to be removed.

Figure 6Z. The 3-inch PVC air line to serve the future aeration mixer is to be routed through the wall via a new cored opening in the corner of the valve vault, centerline 1'-6" below the underside of the cover slab. Protect or relocate the electrical conduit during the installation of the air line.

Figure 6AA. There are numerous locations on the wall and floor of the valve vault where mounting brackets have been removed leaving exposed anchors. The anchors shall be drilled down to be ½" below the surface, and patched Per Specification 03700, Concrete Repair. Payment for this work shall be per Specification 01020, Force Account Procedures for Coating Work.

Figure 6BB. The existing magnetic flow meter is to be removed and replaced with a new magnetic flow meter, per Specification 17200. The exposed ductile iron pipe in the meter vault is to be coated with the hi-build epoxy system. Note the groundwater leakage into the vault.

Figure 6CC. The existing conduit serving the magnetic flow meter is to be re-used for the new flow meter. The ground water leakage evident through the wall penetrations for the electrical conduit is to be sealed per Specification 02658, Chemical Injection Grouting, and paid for per Specification 01020, Force Account Procedures for Coating Work.

Figure 6DD. Ground water leakage is evident around the wall penetrations of the 20-inch ductile iron pipe of the meter vault. These areas shall also be grouted and sealed.

APPENDIX F

LETTER OF AGREEMENT, SERVICE UPGRADE AT FIFE PUMP STATION #10

TACOMA POWER

3628 South 35th Street
Tacoma, Washington 98409-3192

TACOMA PUBLIC UTILITIES

LETTER OF AGREEMENT

March 18, 2014

City of Fife
Mr. David K. Zabell
City Manger
3725 Pacific Hwy. E.
Fife, WA 98424

Dear Mr. Zabell:

Subject: Service Upgrade at Fife Pump Station #10;
Located at 3949 Industrial Road, Fife, WA

This Letter of Agreement will memorialize the understanding of the Cities of 'Tacoma and Fife' as to the scope of work and payment provision for the City of Fife pump station located at 3949 Industrial Road, Fife, WA. This letter is for your review, signature, and return to this office. The copy marked Customer's Copy is for your reference and files.

It is agreed and understood that Tacoma Power will be utilizing Tacoma Power's personnel to complete the items for work it has agreed to perform.

Tacoma Power does anticipate that the project will require Tacoma Power's Line Crew will have to work outside of core hours for a portion of the project as well as during core business hours.

Requirements contained in this letter for installation of service are in accordance with the current Customer Service Policies of Tacoma Power and are subject to change as the Customer Service Policies are changed.

Tacoma Powers Construction Responsibility (Electrical and Civil Work Portion):

Tacoma Power shall:

- Install 1-75kva, pad mount transformer , 3 phase, 277/480v on customer provided vault and cover
- Install new 15kv primary cables between vaults per one line diagram and work order
- Terminate all 15kv primary cables at the vaults and transformer
- Terminate customers service wire in the pad mount transformer
- Set the permanent meter for 200A 277/480v service when approved for electrical service

- Removal of existing 120/208 volt pad mount transformer, cables and concrete pad

- Capping existing 4 inch conduit from TPU tap box at old transformer location
- Perform work during core business hours and outside core business hours

Payment:

Tacoma Power shall invoice Fife on monthly basis unless both parties agree to end of project billing, please let me know your preference. City of Fife will remit payment to Tacoma Power within (30) days following receipt of invoice. In the event City of Fife fails to pay any monies to Tacoma Power as and when due hereunder, City of Fife shall pay at the rate of 1% per month with a three dollar minimum.

Billing of construction activities will include all labor costs, materials, equipment and overheads. Estimated construction costs are $37,538.00.

Disputes' of billing amounts will be brought to the attention of both parties within 15 days of receipt invoice.

Indemnification / Insurance:

The City of Tacoma and the City of Fife agree herein to indemnify and hold the other harmless from any and all claims of bodily injury and property damage arising from their respective acts of negligence in the execution of the work that is the subject of this Letter Agreement. Pursuit to RCW 4.24.115 the Cities agree that this mutual and reciprocal indemnification provision has been mutually negotiated and that they individually waive their immunity under Title 51 RCW.

City of Fife and Contractor's Responsibility:

Items a. through g. listed below must be inspected and approved by Tacoma Power's T&D Construction Inspector. Call (253) 381-3023, 24 hours prior to any work being done.

a. Prior to any construction, the contractor shall contact the project engineer to schedule a pre-construction meeting with the Line Department Inspector.

b. The developer/customer shall be responsible to have the primary civil (trench, conduit, vaults) system and secondary's installed by a qualified electrical contractor licensed in the State of Washington under Chapter 19.28 RCW. All work must be completed in accordance with Tacoma Power's design, construction, and inspection standards.

c. If the City of Fife or their agent fails to properly install the civil system in accordance with Tacoma Power's drawings, standards, and as directed by Tacoma Power's T&D Construction inspector, then that portion will be replaced, relocated, or revised by the customer at the customer's expense. Failure to make all corrections as specified by Tacoma Power will result in the customer paying for any costs incurred by Tacoma Power to make the corrections before service is provided. All secondary work must be inspected by a Tacoma Power Electrical Inspector.

d. Clearances from pad mounted transformers to structures are measured from the nearest metal portion of the transformer to the structure or structure's overhang. The clearance from a building and/or overhang must be 4 feet if the building has noncombustible walls

and/or overhang (brick, concrete, steel or stone) and 8 feet if the building has combustible walls and/or overhang. No doors, windows, stairways or other openings may be located within 8 feet of any transformer. A three foot side clearance between the transformer and a driveway is required. This is measured from the outside of the transformer vault lid. Some of the lots may require an adjustment to the building placement to provide adequate clearance to our structures. See Standard A-UG-1200 for more details.

e. The City of Fife or their agent shall be responsible to contact and coordinate the construction activities/relocation with the other utilities (i.e., natural gas, telephone, and cable).

f. The City of Fife or their agent shall be responsible to have a licensed engineer or land surveyor provide for all property surveys, including setting and maintaining temporary wooden hubs for lot or building site corners and establishing and maintaining finished elevations along Tacoma Power's underground electrical distribution system trench and at structure locations. Tacoma Power will not be held responsible for the replacement of said corners that may be obliterated or lost during construction. Elevations at all breaks in grade along the trench and at all structure locations shall be marked on one print of the electrical layout and returned to Tacoma Power for construction purposes. Tacoma Power shall be notified in writing of any changes in elevations or plat layouts prior to installation of the underground distribution system. If any changes are made after Tacoma Power's facilities have been installed, the cost of relocating or revising Tacoma Power's facilities will be charged to the customer. Any deviation due to inadequate depth of coverage as required by State Safety Codes shall be at the developer's expense.

g. The City of Fife or their agent shall provide an all weather access road to each structure (i.e., transformer, junction box, switchgear, etc.) Access to transformers and structures will be on roadways rated for truck traffic suitable for Tacoma Power line construction vehicles.

h. Obtain an electrical permit for any secondary work from Tacoma Power's Electrical Inspection office. Call (253) 502-8277 for permit fees and other required information.

i. For services over 400 amps, the contractor will provide a conduit between the electric meter location and the telephone/data communications panel for the purpose of remote metering.

j. For services of 400 amps and above, a set of electrical plans must be submitted to the Electrical Inspection Office for review.

k. Installation of any customer owned secondary conduit is to be inspected by the Electrical Inspection office before backfill of the trench. Call (253) 502-8277, 24-hours prior to construction for inspection scheduling.

l. Obtain a copy of the following Tacoma Power Standards prior to construction: These Standards can be obtained from Tacoma Power's web site (www.tacomapower.com).

m. The primary trench and conduit in accordance with Standard C-UG-1300. The conduit shall be Schedule 40 PVC gray electrical type or as shown on the Tacoma Power drawing. If the trench is more than four feet deep, shoring will be required.

n. 1 internally grounded, concrete junction box (No. 554 per Standard C-UG-2000) with H-20 lids, with a spring-loaded door according to Standards C-UG-1100 and C-UG-1500.

o. 1 internally grounded, concrete transformer vault (No. 554 per Standard C-UG-2000) according to Standards A-UG-1200 and C-UG-1700 for three-phase transformer(s) for site excavation and vault specifications, with location as shown on Tacoma Power's drawing.

p. Guard posts shall be installed at transformer locations according to Standard C-UG-1400. The transformer will not be installed until an acceptable transformer guard is installed. Consult with Tacoma Power's T&D Construction Inspector for guard post requirements.

q. Proof primary conduit using a Tacoma Power approved mandrel after backfill. The conduit is to be fished and swabbed by the customer upon completion of the installation. Proving shall then be demonstrated with Tacoma Power's authorized T&D Construction inspector present. After proving that the conduit is free from obstruction, the customer shall leave a 1/8-inch diameter polypropylene fish cord in the conduit.

If you have questions, please contact Dan Reed at (253) 502-8292.

Very truly yours,

John Martinson P.E.

John Martinson, P.E. | Tacoma Power
Transmission & Distribution Supervisor
T&D Electrical Services - New Services Engineering
P: (253) 502-8296 | F: (253) 502-8659
http://www.mytpu.org/tacomapower/permitting

DLR:hkd DLR Fife Pump Station #10 03-18-14.docx DLR

approved as to form.
Fife assistant City attorney

David K. Zabell
City Manager
City of Fife

Print Name) Date

3/18/14

Approved to Form Date
City of Tacoma

Print Name) Date

APPENDIX G

SST SLIDE GATE DRAWINGS

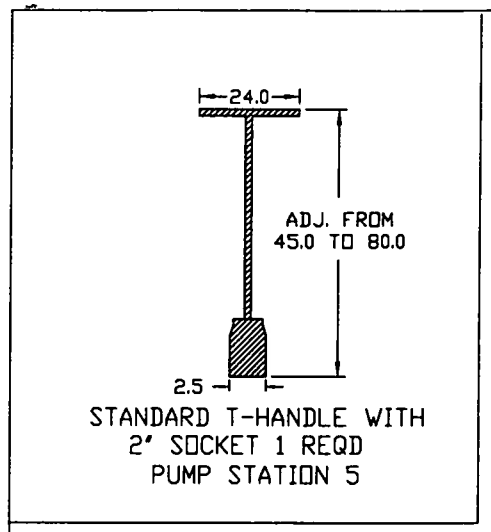

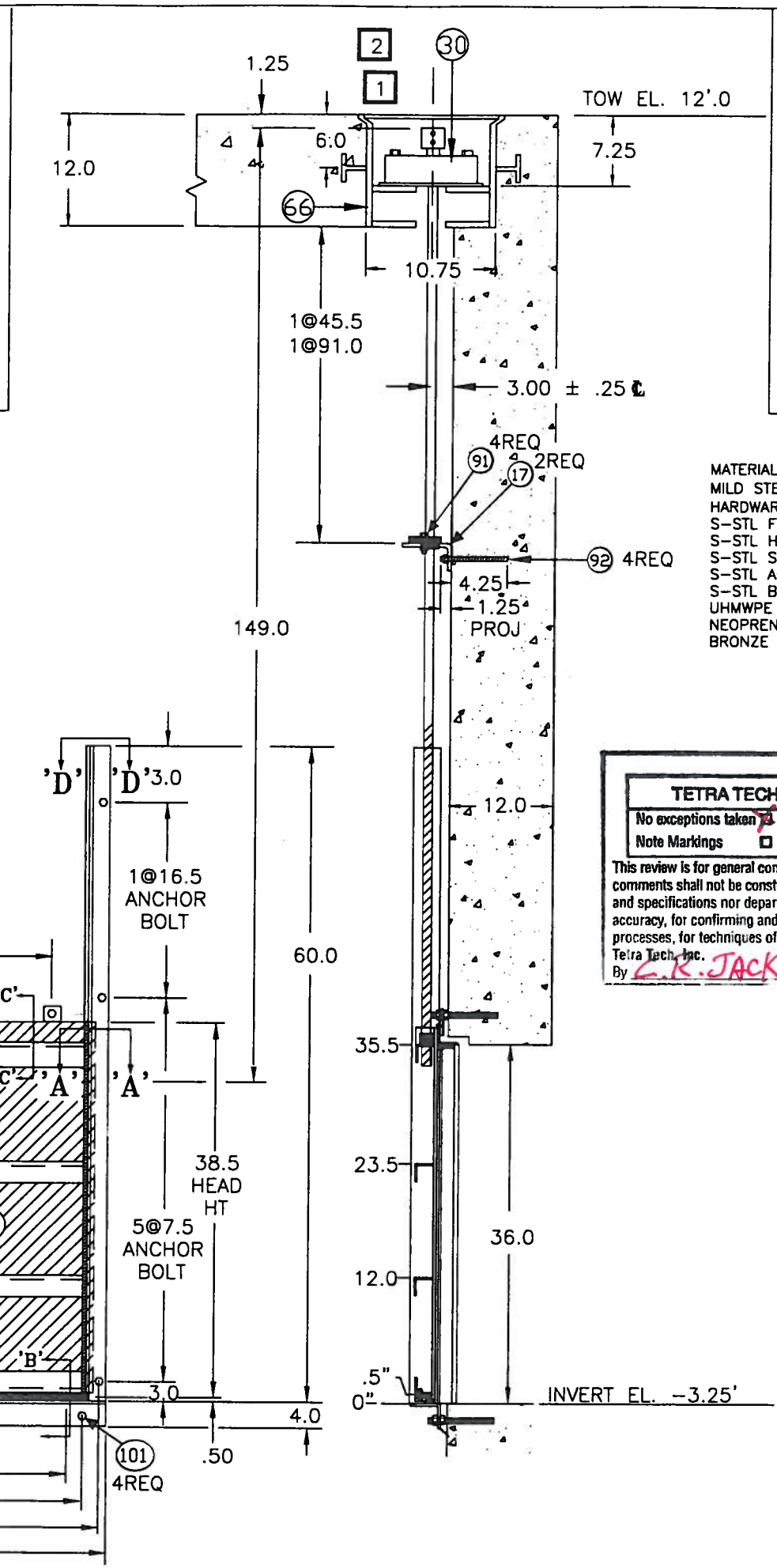

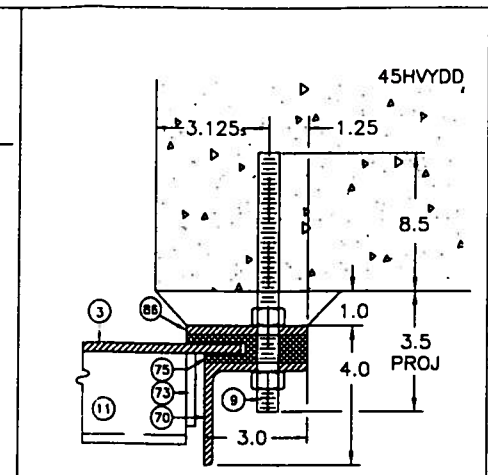

SECTION 'D'-'D'

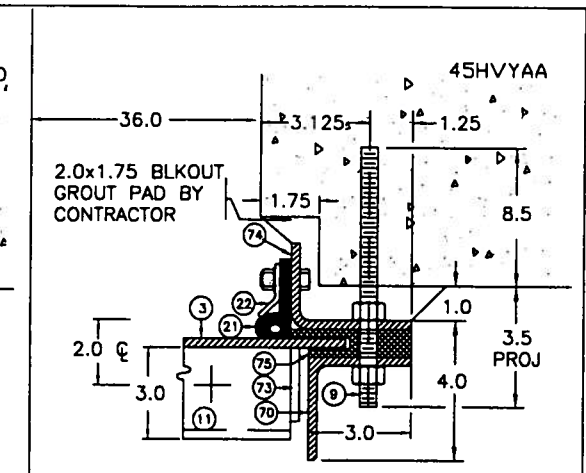

SECTION 'A'-'A'

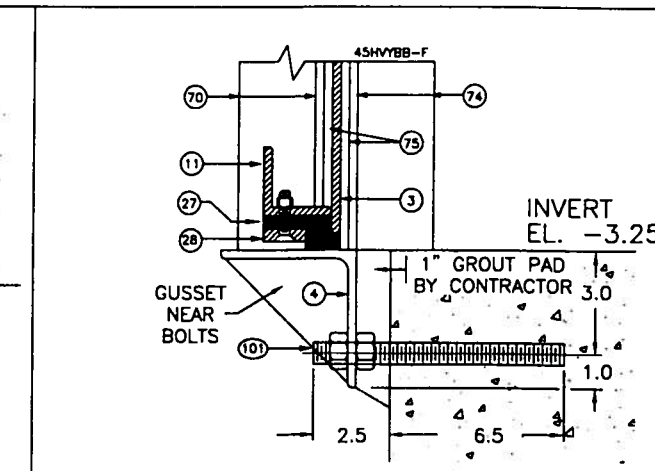

SECTION 'B'-'B'

MATERIAL SPECIFICATIONS:
MILD STEEL = ASTM-A36 W/8.0 MILS EPOXY COATING
HARDWARE & FASTENERS = TYPE 304 SS ASTM-F593/F594
S-STL FORMED & PLATE = 304 SS ASTM-A240
S-STL HR & FLAT BAR SHAPES = TYPE 304 SS ASTM-A276
S-STL STEM = TYPE 304 SS ASTM-A276
S-STL ANCHOR ROD = TYPE 304 SS ASTM-A276
S-STL BOX TUBE = TYPE 304 SS ASTM A-276
UHMWPE = ASTM-D1248
NEOPRENE RUBBER = ASTM-D2000
BRONZE = ASTM-B584

SUBMITTAL REVIEW

TETRA TECH REVIEW	RESPONSE REQUIRED OF CONTRACTOR
No exceptions taken ☑ Rejected ☐ Note Markings ☐ Comments Attached ☐	Confirm In Writing ☐ Resubmit ☐

This review is for general conformance with the design concept and contract documents. Marking or comments shall not be construed as relieving the Contractor from compliance with the project plans and specifications nor departures therefrom. The Contractor remains responsible for details and accuracy, for confirming and correlating all quantities and dimensions, for selecting fabrication processes, for techniques of assembly, and for performing his work in a safe manner.
Tetra Tech, Inc. 1917 First Avenue, Seattle, WA 98101
By C.K. JACKSON Date 8/5/02

1 SHOP & SHIP NOTE: NON STANDARD STAINLESS STEEL FLOOR BOX.

2 SHOP & SHIP NOTE: H-20 FOOR BOX

MD GH-45 STAINLESS STEEL SLIDE GATE MATERIAL LIST

1	STEM	1.5" DIAMETER S-STL, 4TPI W/L HAND DOUBLE ACME ROLLED THREADS, 16 MICRO IN. RMS OR LESS FINISH
3	GATE HEAD	1/4" S-STL PLATE
4	INVERT MEMBER	4" X 4" X 1/4" S-STL HR ANGLE
*9	ANCHOR BOLTS	1/2" X 12" S-STL ANCHOR ROD, W/2 NUTS
11	STIFFENER	3.0" X 2" X 1/4" FORMED S-STL ANGLE
17	STEM GUIDE TYPE 1-6	FORMED S-STL, W/UHMW STEM GUIDE BUSHING
21	P-BULB SEAL	NEOPRENE RUBBER
22	RETAINER	3/16" X 2" S-STL FLAT BAR W/SLOTED HOLES
27	INVERT SEAL	NEOPRENE RUBBER, PART# 7509
28	INV. SEAL RETNR.	3/8" X 1 1/4" S-STL FLAT BAR
29	STEM NUT	NON-RISING STEM NUT 2.5" X 2.5" X 2.5" BRONZE
30	OPERATOR	MODEL G-5 NRS THRUST NUT UNIT, W/2" SQAURE NUT
31	STOP NUT	BRONZE
66	FLOOR BOX	304 S-STL
70	GUIDE RAIL	3" X 3" X 1/4" S-STL HR ANGLE
73	VERT. STIFF.	1/4" X 2" S-STL FLAT BAR
74	SIDE SPIGOT RAIL	3.5" X 2.5" X 1/4" FORMED S-STL ANGLE
75	GUIDE BEARING BAR	UHMW POLYETHYLENE
86	COVER BAR	1/4" X 3.5" S-STL FLAT BAR
91	SG MOUNTING BLT	3/8" X 1 3/4" S-STL HEX BOLT, W/NUT, LW, (2) 3/8" FWS, (1) 1/2" FW
*92	SG ANCHOR BLT	1/2" X 5 1/2" S-STL ANCHOR ROD, W/NUT & F/W & L/W
95	TOP SPIGOT RAIL	2 1/2" X 2 1/2" X 1/4" S-STL HR ANGLE
*101	ANCHOR BOLTS	1/2" X 9" S-STL ANCHOR ROD, W/2 NUTS
*102	ANCHOR BOLTS	1/2" X 5.5" S-STL ANCHOR ROD, W/2 NUTS
190	CENTER TUBE	3" X 3" S-STL BOX TUBE

* ANCHOR BOLTS ARE DESIGNED FOR USE WITH
* HILTI HY 150 ADHESIVE INJECTION SYSTEM OR EQUAL (ADHESIVE BY CONTRACTOR)

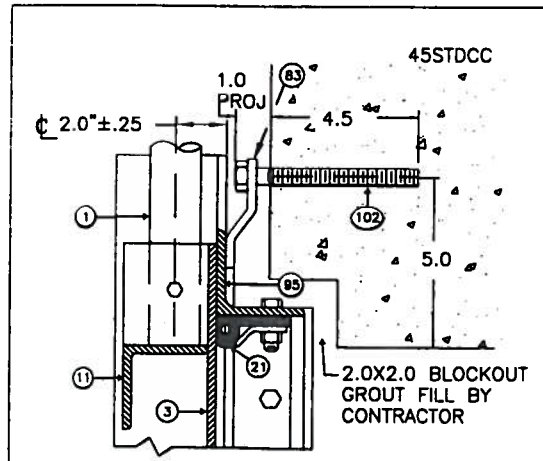

SECTION 'C'-'C'

THIS DRAWING IS THE PROPERTY OF GOLDEN HARVEST, INC. THE DESIGN, DATA AND INFORMATION CONTAINED WITHIN IS NOT TO BE USED, DISSEMINATED, LOANED OR REPRODUCED IN WHOLE OR IN PART WITHOUT THE WRITTEN CONSENT OF GOLDEN HARVEST, INC.

GOLDEN HARVEST	
ORIGINAL	DW
CHECKED	
CHECKED	
TRANS. RET. SUB.	
CUST. SAT.	
FINAL RELEASE	

Max Seating Head = 10.0 Ft. – Max Unseating Head = 10.0 Ft.
Max Operating Head = 10.0 Ft. Measured From Gate Invert

36" X 36" MD GH-45 SPIGOT MTD SS SLIDE GATE	GOLDEN HARVEST GOLDEN GATES 1-800-338-6238 P.O. BOX 287 Burlington, WA 98233	PUMP STATION #5 SLD-1,2 2 - REQ.
Project Description: CONTRACT 2 - PUMP STATIONS NO. 1,5,6,12&13		Date Drawn: 05-22-02
For: CITY OF FIFE, WA		Revision: 06-18-02
Contractor: C. A. CAREY		Revision: 07-26-02
Engineer: TETRA TECH/KCM, INC.		Revision:
		G.H. Drawing #: 1

Drawn By:		FL = 65.0#	Scale:	Job No.:	Contract Sht #:
DW			NTS	01-1213	

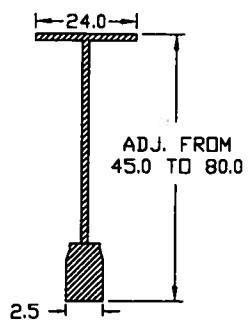

STANDARD T-HANDLE WITH
2' SOCKET 1 REQD
PUMP STATION 5

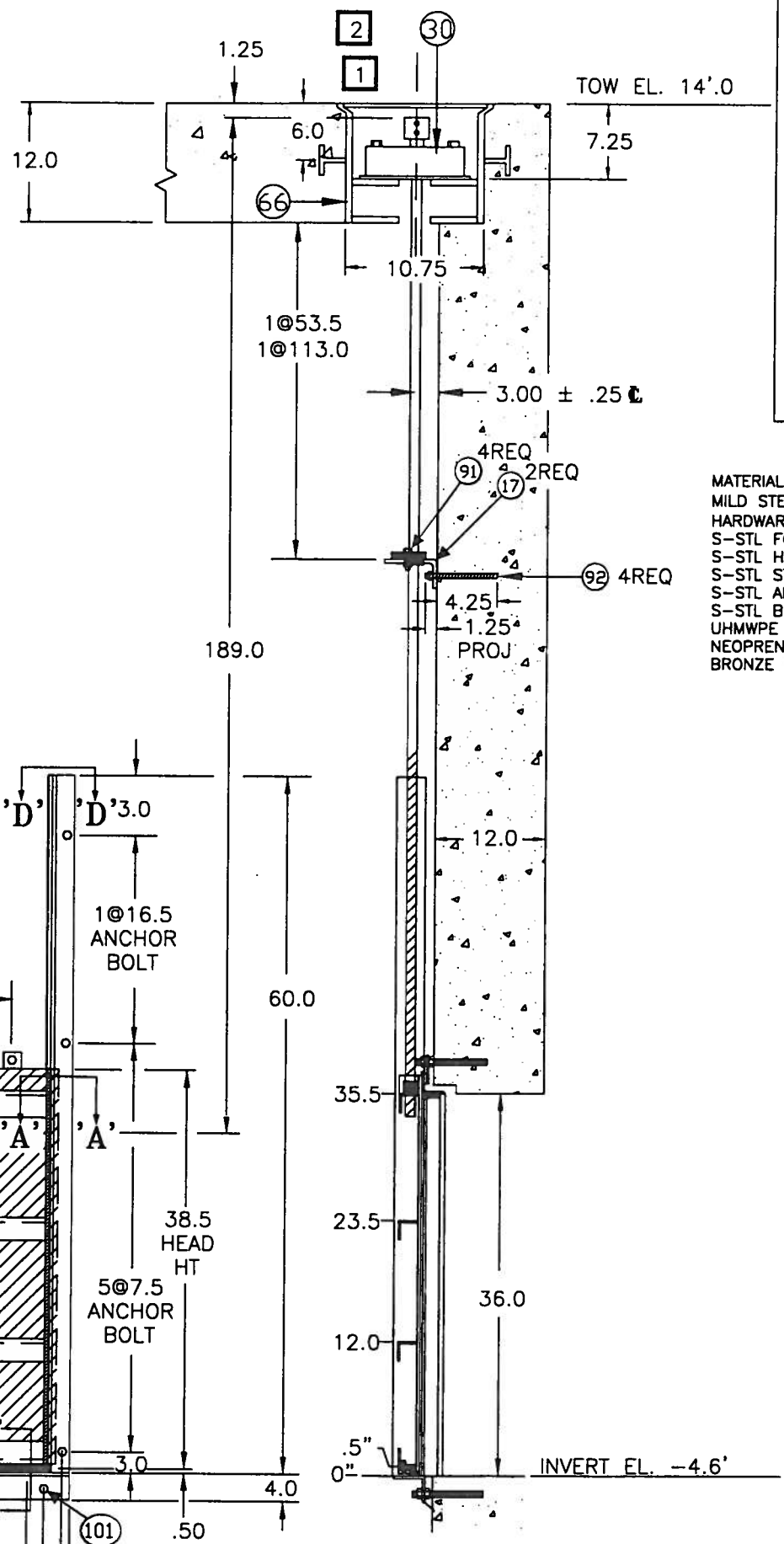

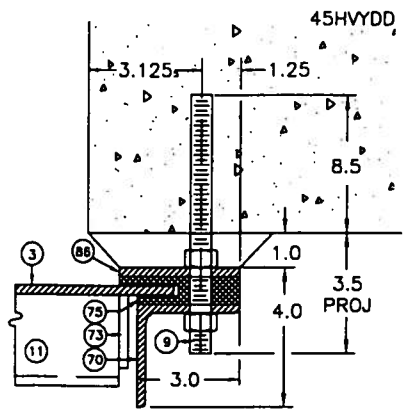

SECTION 'D'-'D'

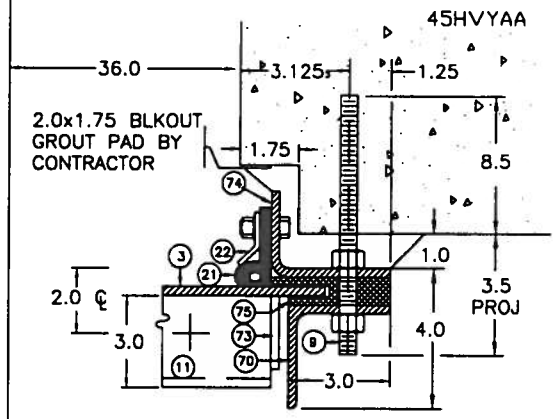

SECTION 'A'-'A'

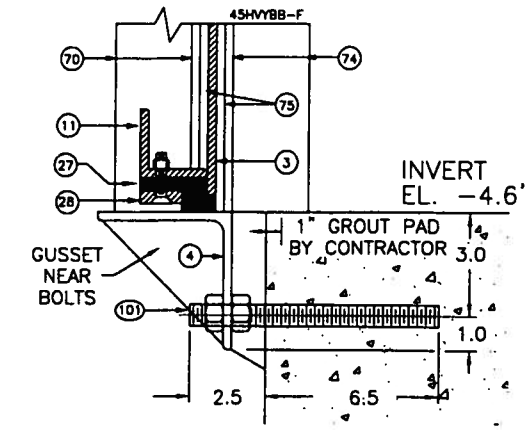

SECTION 'B'-'B'

MATERIAL SPECIFICATIONS:
MILD STEEL = ASTM-A36 W/8.0 MILS EPOXY COATING
HARDWARE & FASTENERS = TYPE 304 SS ASTM-F593/F594
S-STL FORMED & PLATE = 304 SS ASTM-A240
S-STL HR & FLAT BAR SHAPES = TYPE 304 SS ASTM-A276
S-STL STEM = TYPE 304 SS ASTM-A276
S-STL ANCHOR ROD = TYPE 304 SS ASTM-A276
S-STL BOX TUBE = TYPE 304 SS ASTM A-276
UHMWPE = ASTM-D1248
NEOPRENE RUBBER = ASTM-D2000
BRONZE = ASTM-B584

MD GH-45 STAINLESS STEEL SLIDE GATE MATERIAL LIST

1	STEM	1.5" DIAMETER S-STL, 4TPI W/L HAND DOUBLE ACME ROLLED THREADS, 16 MICRO IN. RMS OR LESS FINISH
3	GATE HEAD	1/4" S-STL PLATE
4	INVERT MEMBER	4" X 4" X 1/4" S-STL HR ANGLE
*9	ANCHOR BOLTS	1/2" X 12" S-STL ANCHOR ROD, W/2 NUTS
11	STIFFENER	3.0" X 2" X 1/4" FORMED S-STL ANGLE
17	STEM GUIDE TYPE 1-6	FORMED S-STL, W/UHMW STEM GUIDE BUSHING
21	P-BULB SEAL	NEOPRENE RUBBER
22	RETAINER	3/16" X 2" S-STL FLAT BAR W/SLOTED HOLES
27	INVERT SEAL	NEOPRENE RUBBER, PART# 7509
28	INV. SEAL RETNR.	3/8" X 1 1/4" S-STL FLAT BAR
29	STEM NUT	NON-RISING STEM NUT 2.5" X 2.5" X 2.5" BRONZE
30	OPERATOR	MODEL G-5 NRS THRUST NUT UNIT, W/2" SQAURE NUT
31	STOP NUT	BRONZE
66	FLOOR BOX	304 S-STL
70	GUIDE RAIL	3" X 3" X 1/4" S-STL HR ANGLE
73	VERT. STIFF.	1/4" X 2" S-STL FLAT BAR
74	SIDE SPIGOT RAIL	3.5" X 2.5" X 1/4" FORMED S-STL ANGLE
75	GUIDE BEARING BAR	UHMW POLYETHYLENE
86	COVER BAR	1/4" X 3.5" S-STL FLAT BAR
91	SG MOUNTING BLT	3/8" X 1 3/4" S-STL HEX BOLT, W/NUT, LW, (2) 3/8" FWS, (1) 1/2" FW
*92	SG ANCHOR BLT	1/2" X 5 1/2" S-STL ANCHOR ROD, W/NUT & F/W & L/W
95	TOP SPIGOT RAIL	2 1/2" X 2 1/2" X 1/4" S-STL HR ANGLE
*101	ANCHOR BOLTS	1/2" X 9" S-STL ANCHOR ROD, W/2 NUTS
*102	ANCHOR BOLTS	1/2" X 5.5" S-STL ANCHOR ROD, W/2 NUTS
190	CENTER TUBE	3" X 3" S-STL BOX TUBE

1

* ANCHOR BOLTS ARE DESIGNED FOR USE WITH
* HILTI HY 150 ADHESIVE INJECTION SYSTEM OR EQUAL (ADHESIVE BY CONTRACTOR)

1 SHOP & SHIP NOTE: NON STANDARD STAINLESS STEEL FLOOR BOX.

2 SHOP & SHIP NOTE: H-20 FOOR BOX

THIS DRAWING IS THE PROPERTY OF GOLDEN HARVEST, INC. THE DESIGN, DATA AND INFORMATION CONTAINED WITHIN IS NOT TO BE USED, DISSEMINATED, LOANED OR REPRODUCED IN WHOLE OR IN PART WITHOUT THE WRITTEN CONSENT OF GOLDEN HARVEST, INC.

GOLDEN HARVEST	
ORIGINAL	DW
CHECKED	
CHECKED	
TRANS REV SUB	
CUST SHT	
FINAL RELEASE	

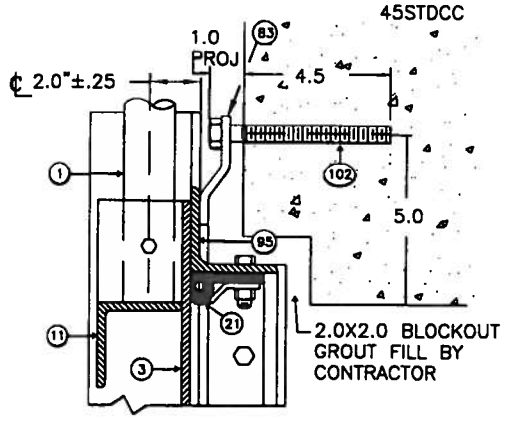

SECTION 'C'-'C'

Max Seating Head = 10.0 Ft. - Max Unseating Head = 10.0 Ft.
Max Operating Head = 10.0 Ft. Measured From Gate Invert

36" X 36" MD GH-45 SPIGOT MTD SS SLIDE GATE	GOLDEN HARVEST GOLDEN GATES 1-800-338-6238 P.O. BOX 287 Burlington, WA 98233	PUMP STATION #6 SLD-3,4 2 - REQ.
Project Description: CONTRACT 2 - PUMP STATIONS NO. 1,5,6,12&13		Date Drawn: 05-22-02
For: CITY OF FIFE, WA		Revision: 06-18-02
Contractor: C. A. CAREY		Revision: 07-26-02
Engineer: TETRA TECH/KCM, INC.		Revision:
		G.H. Drawing #: 2

Drawn By:		FL = 65.0#	Scale:	Job No.:	Contract Sht #:
DW			NTS	01-1213	

APPENDIX H

WSDOT STANDARD PLANS

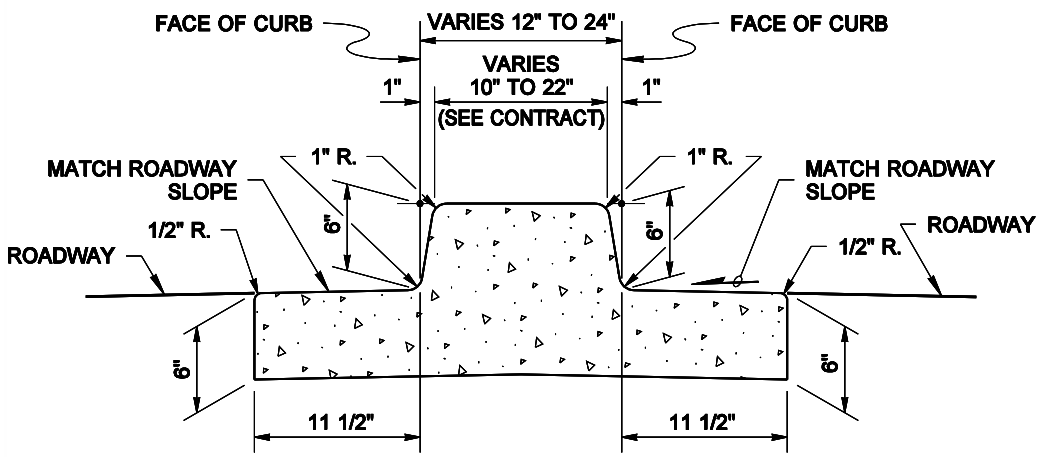

DUAL-FACED CEMENT CONCRETE TRAFFIC CURB AND GUTTER

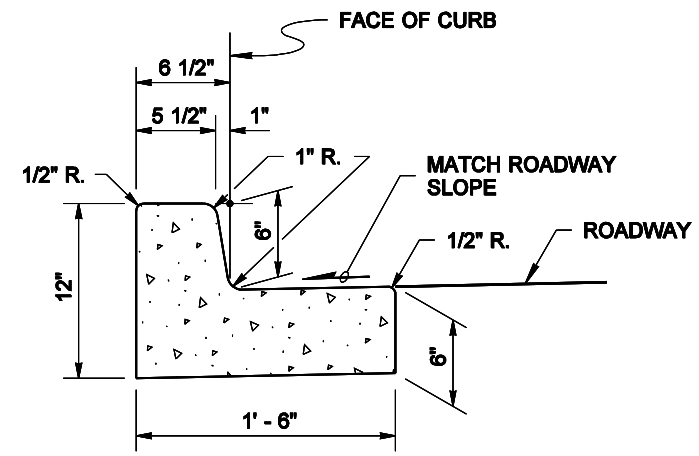

CEMENT CONCRETE TRAFFIC CURB AND GUTTER

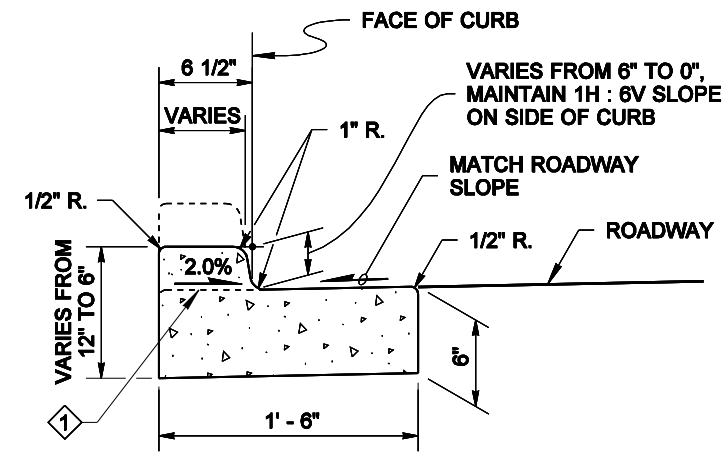

DEPRESSED CURB SECTION

AT CURB RAMPS AND DRIVEWAY ENTRANCES

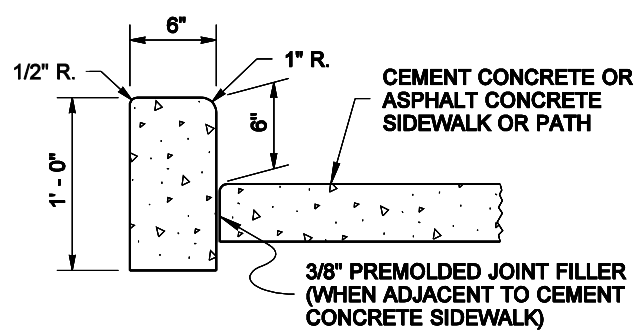

CEMENT CONCRETE PEDESTRIAN CURB

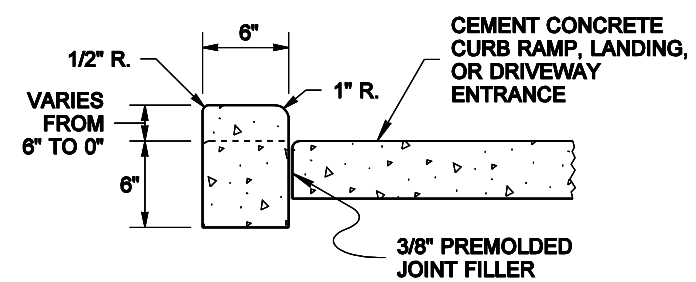

CEMENT CONCRETE PEDESTRIAN CURB

AT CURB RAMPS, LANDINGS, AND DRIVEWAY ENTRANCES

NOTE

1. See **Standard Plan F-30.10** for Curb Expansion and Contraction Joint spacing.

1 FLUSH WITH GUTTER PAN AT CURB RAMP ENTRANCE ~ 1/2" VERTICAL LIP AT DRIVEWAY ENTRANCE

DRAWN BY: FERN LIDDELL

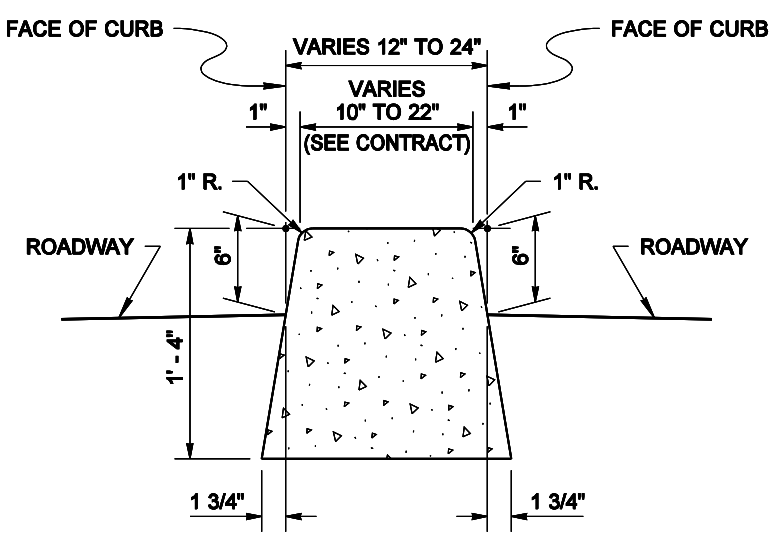

DUAL-FACED CEMENT CONCRETE TRAFFIC CURB

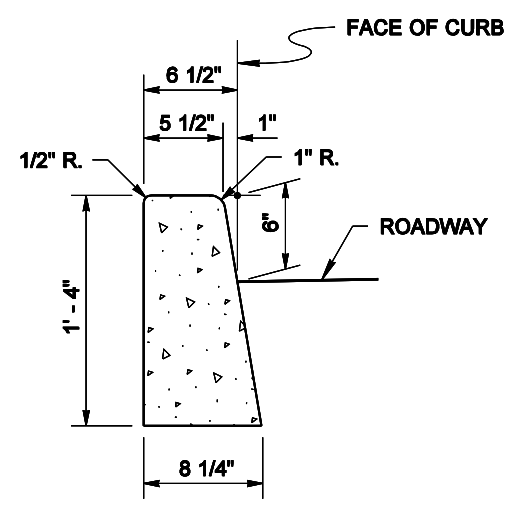

CEMENT CONCRETE TRAFFIC CURB

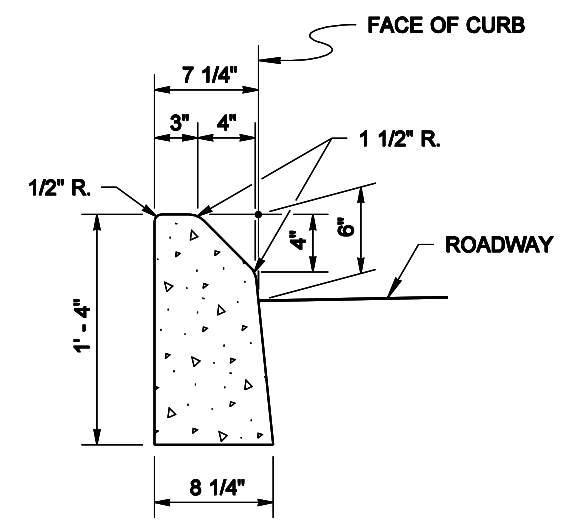

MOUNTABLE CEMENT CONCRETE TRAFFIC CURB

NOTE: THIS PLAN IS NOT A LEGAL ENGINEERING DOCUMENT BUT AN ELECTRONIC DUPLICATE. THE ORIGINAL, SIGNED BY THE ENGINEER AND APPROVED FOR PUBLICATION, IS KEPT ON FILE AT THE WASHINGTON STATE DEPARTMENT OF TRANSPORTATION. A COPY MAY BE OBTAINED UPON REQUEST.

CEMENT CONCRETE CURBS

STANDARD PLAN F-10.12-02

SHEET 1 OF 1 SHEET

APPROVED FOR PUBLICATION

Pasco Bakotich III — STATE DESIGN ENGINEER

06-16-11 — DATE

Washington State Department of Transportation

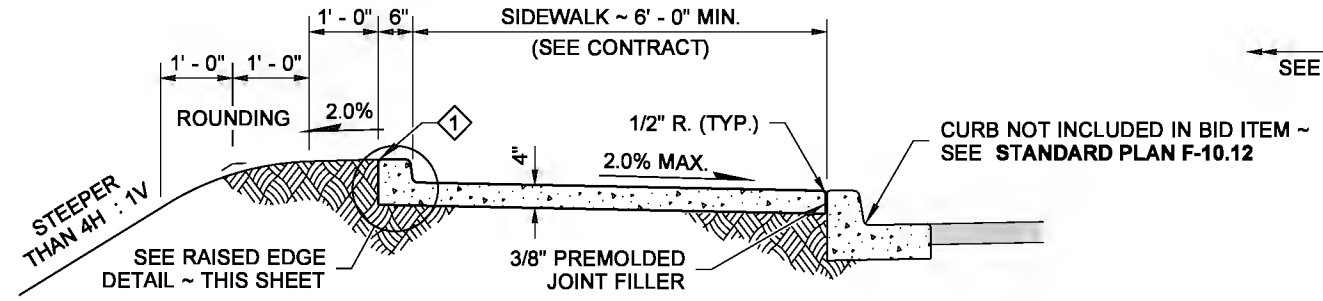

WITH RAISED EDGE

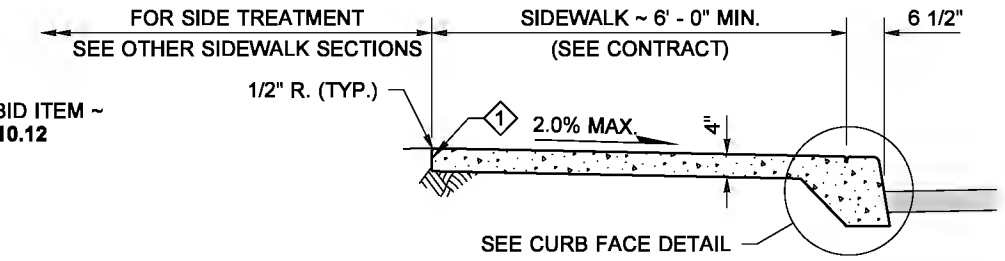

MONOLITHIC CEMENT CONCRETE CURB AND SIDEWALK

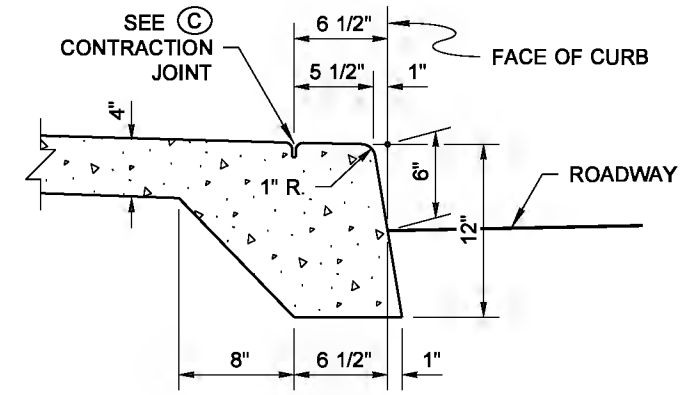

CURB FACE DETAIL

EXTEND SIDEWALK TRANSVERSE EXPANSION JOINTS TO INCLUDE CURB (FULL DEPTH)

1 FINISHED GRADE 1" BELOW TOP OF CONCRETE SURFACE

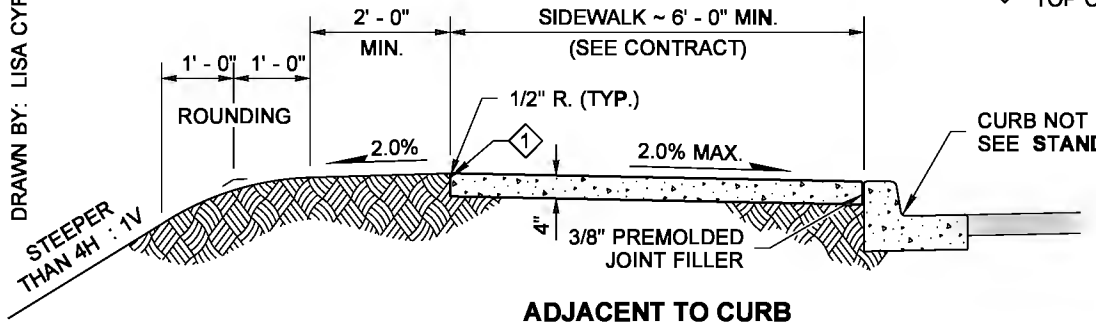

ADJACENT TO CURB
(STEEP FILL SLOPES)

NOTE

1. Four feet of the sidewalk width shall be the minimum pedestrian accessible route free of vertical and horizontal obstructions. Gratings, Access Covers, Junction Boxes, Cable Vaults, Pull Boxes and other appurtenances within the sidewalk must have slip resistant surfaces, be flush with surface, and match grade of the sidewalk.

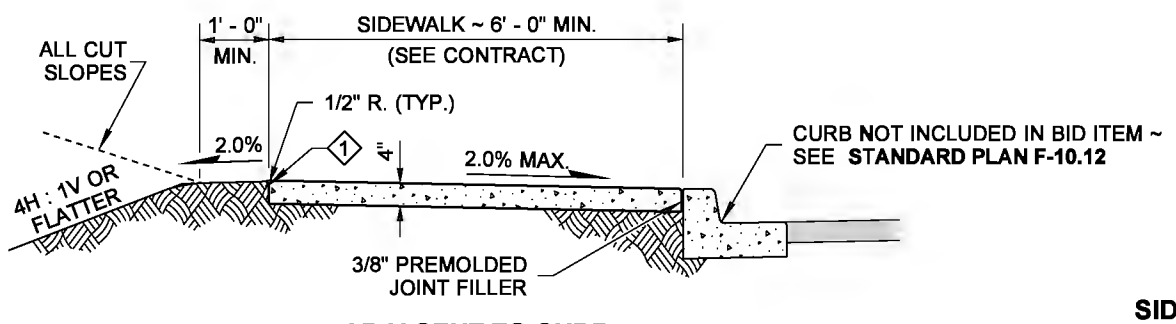

ADJACENT TO CURB

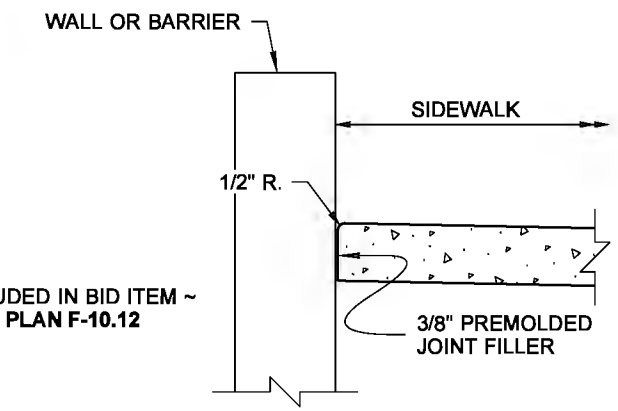

SIDEWALK ADJACENT TO WALL DETAIL

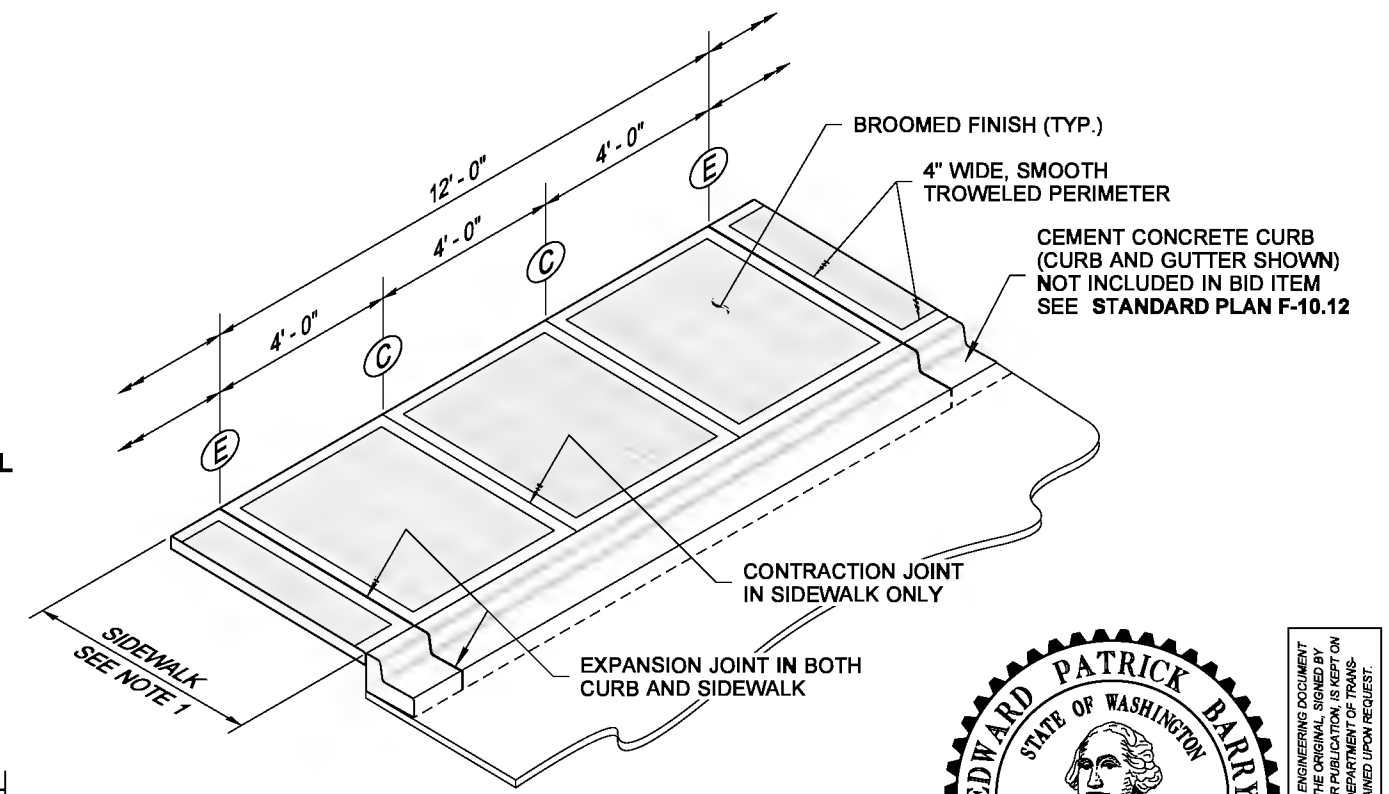

ISOMETRIC VIEW

JOINT AND FINISH DETAIL

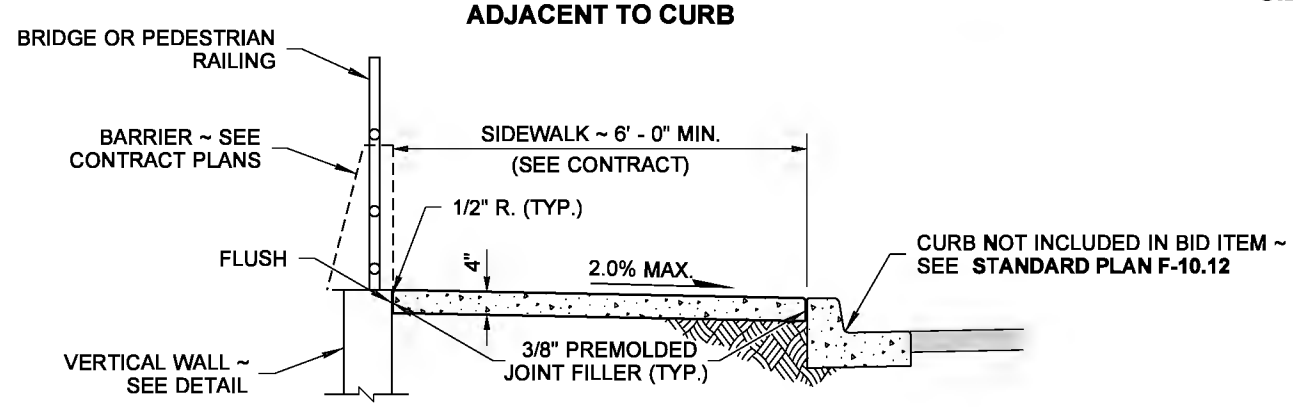

ADJACENT TO CURB AND RAILING OR WALL

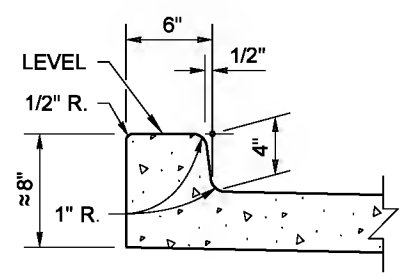

RAISED EDGE DETAIL

EXTEND SIDEWALK TRANSVERSE JOINTS TO INCLUDE RAISED EDGE

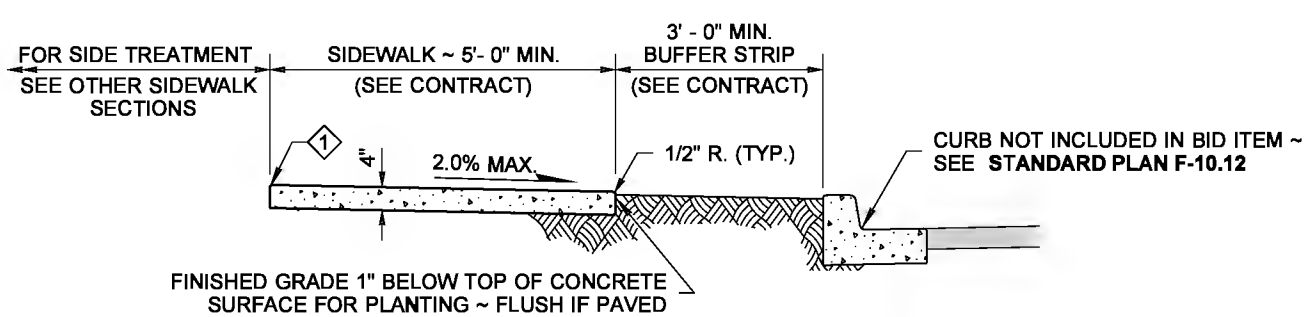

ADJACENT TO BUFFER STRIP

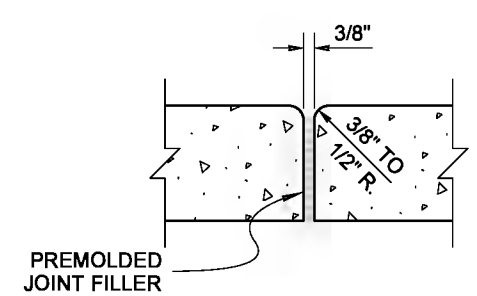

E EXPANSION JOINT

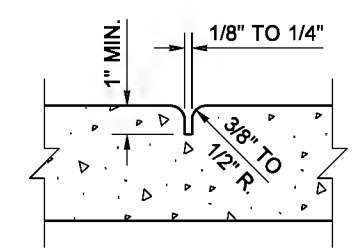

C CONTRACTION JOINT

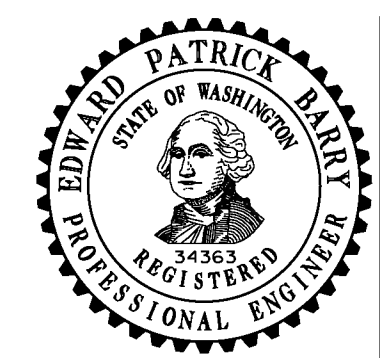

NOTE: THIS PLAN IS NOT A LEGAL ENGINEERING DOCUMENT BUT AN ELECTRONIC DUPLICATE. THE ORIGINAL, SIGNED BY THE ENGINEER AND APPROVED FOR PUBLICATION, IS KEPT ON FILE AT THE WASHINGTON STATE DEPARTMENT OF TRANSPORTATION. A COPY MAY BE OBTAINED UPON REQUEST.

CEMENT CONCRETE SIDEWALK

STANDARD PLAN F-30.10-02

SHEET 1 OF 1 SHEET

APPROVED FOR PUBLICATION

Pasco Bakotich III — STATE DESIGN ENGINEER

6/20/13 — DATE

Washington State Department of Transportation

DRAWN BY: LISA CYFORD

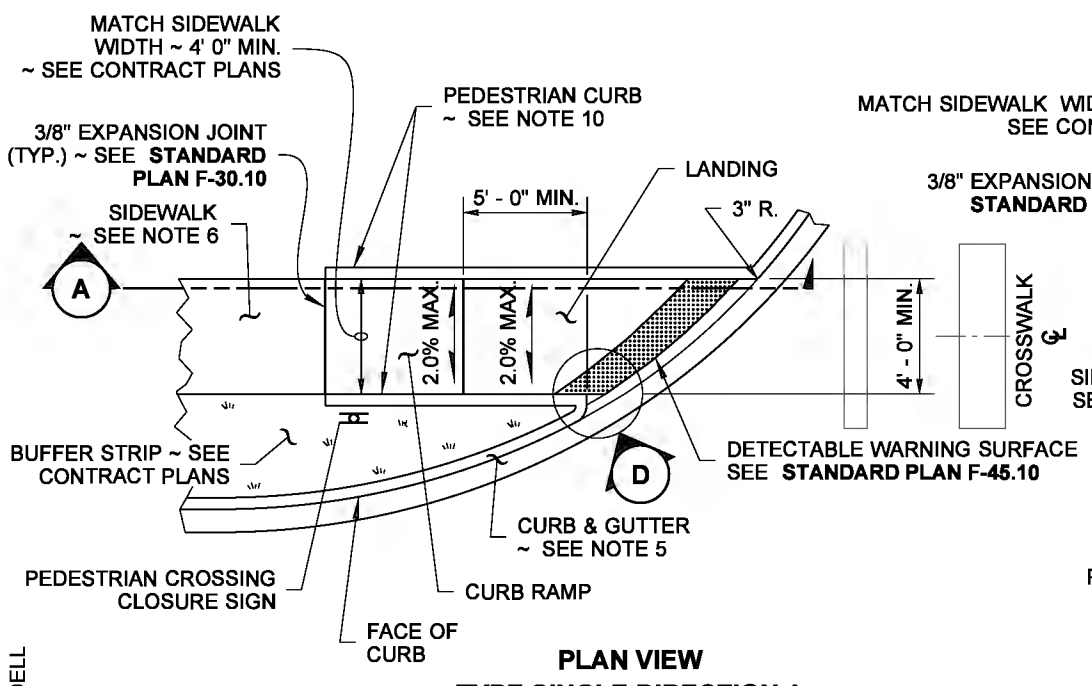

PLAN VIEW
TYPE SINGLE DIRECTION A

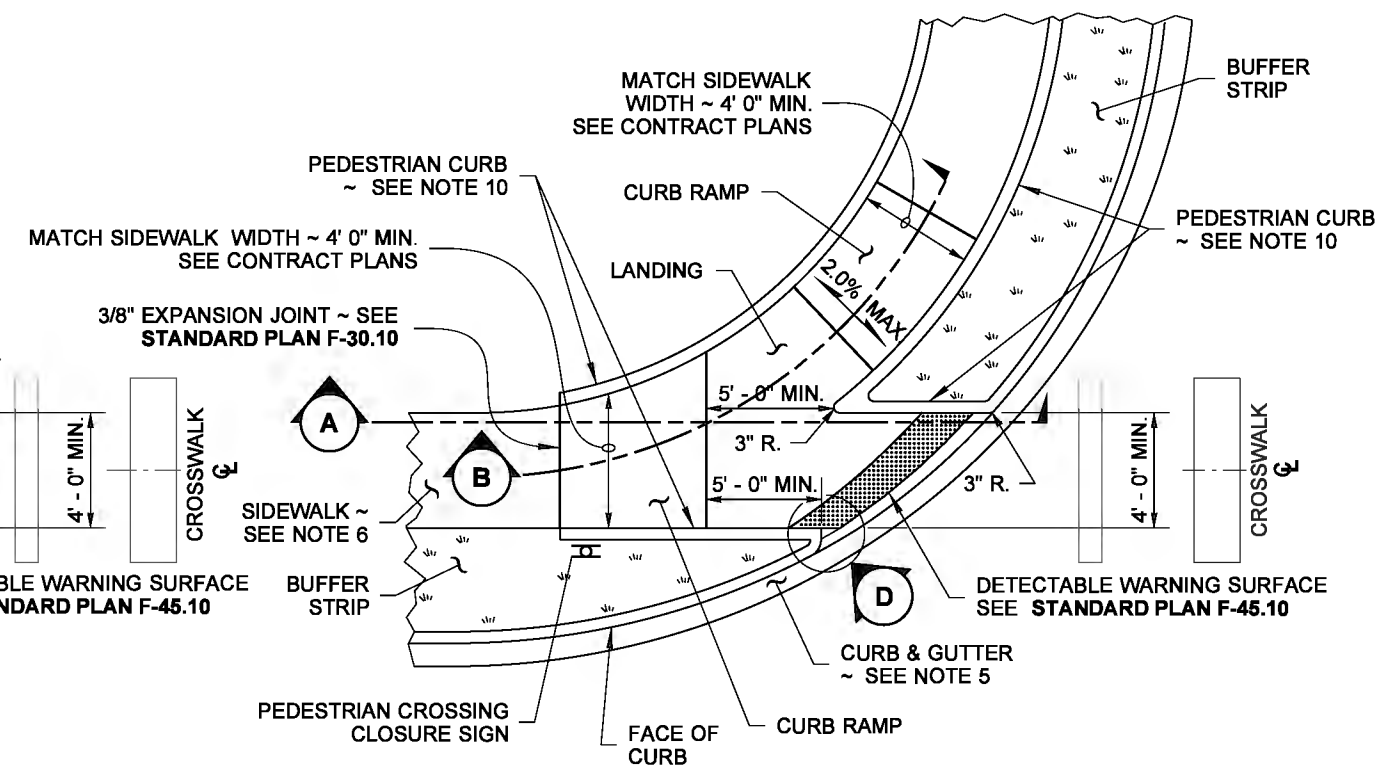

PLAN VIEW
TYPE SINGLE DIRECTION B

NOTES

1. This plan is to be used where pedestrian crossing in one direction is not permitted.
2. Curb ramp location shall be placed within the width of the associated crosswalk, or as shown in the Contract Plans.
3. Where "GRADE BREAK" is called out, the entire length of the grade break between the two adjacent surface planes shall be flush.
4. Do not place gratings, junction boxes, access covers or other appurtanences in front of the curb ramp or on any part of the curb ramp or landing.
5. See the Contract Documents for the curb design specified. See **Standard Plan F-10.12** for Curb, Curb and Gutter, Depressed Curb and Gutter and Pedestrian Curb details.
6. See **Standard Plan F-30.10** for Cement Concrete Sidewalk Details. See contract plans for width and placement of sidewalk.
7. The bid item "Cement Concrete Curb Ramp Type __" does not include the adjacent Curb or (Curb and Gutter), Depressed Curb and Gutter, Pedestrian Curb or Sidewalk, or the pedestrian crossing closure sign.
8. The curb ramp maximum running slope shall not require the ramp length to exceed 15 feet to avoid chasing the slope indefinitely when connecting to steep grades. When applying the 15 foot maximum length, the running slope of the curb ramp shall be as flat as feasible.
9. Curb ramps and landings shall receive broom finish. See **Standard Specifications 8-14.**
10. Pedestrian Curb may be omitted if the ground surface at the back of the Curb Ramp and/or landing will be at the same elevation as the Curb Ramp or Landing and there will be no material to retain.

LEGEND

SLOPE IN EITHER DIRECTION

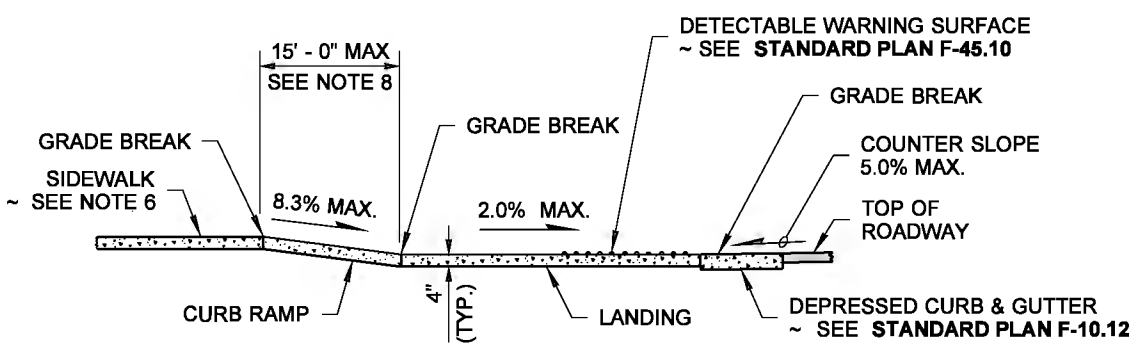

SECTION (A)

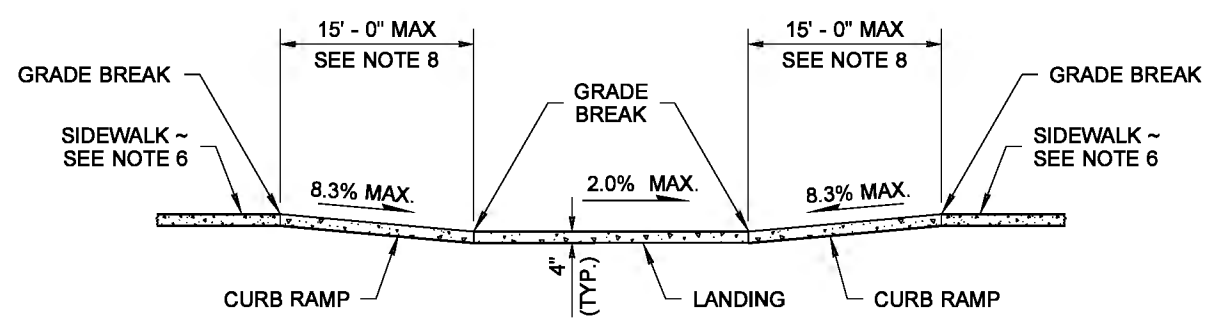

SECTION (B)

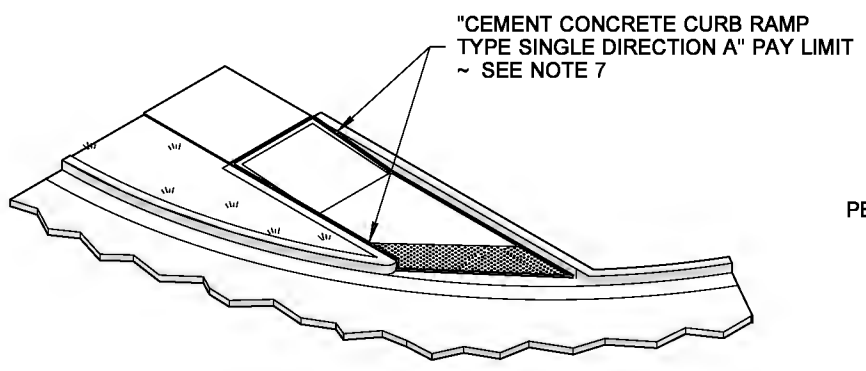

ISOMETRIC VIEW
TYPE SINGLE DIRECTION A
PAY LIMIT

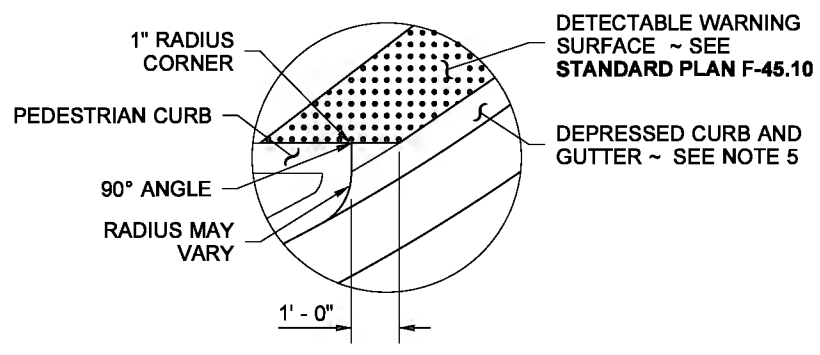

DETAIL (D)

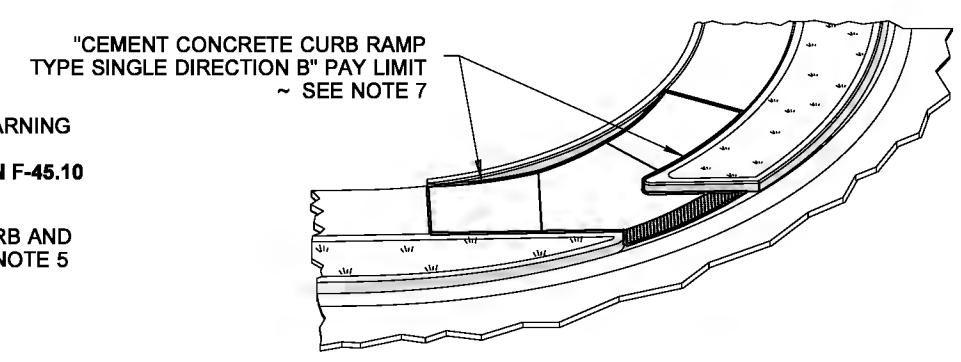

ISOMETRIC VIEW
TYPE SINGLE DIRECTION B
PAY LIMIT

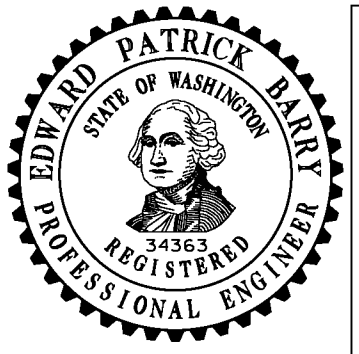

NOTE: THIS PLAN IS NOT A LEGAL ENGINEERING DOCUMENT BUT AN ELECTRONIC DUPLICATE. THE ORIGINAL, SIGNED BY THE ENGINEER AND APPROVED FOR PUBLICATION, IS KEPT ON FILE AT THE WASHINGTON STATE DEPARTMENT OF TRANSPORTATION. A COPY MAY BE OBTAINED UPON REQUEST.

SINGLE DIRECTION CURB RAMP

STANDARD PLAN F-40.16-02

SHEET 1 OF 1 SHEET

APPROVED FOR PUBLICATION

Pasco Bakotich III — STATE DESIGN ENGINEER
6/20/13 — DATE

Washington State Department of Transportation

DRAWN BY: FERN LIDDELL

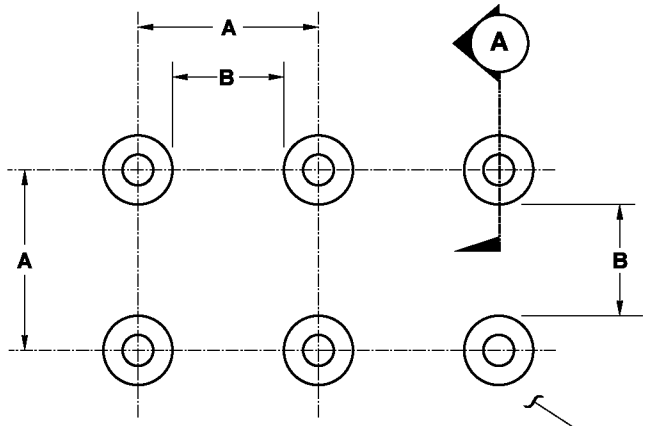

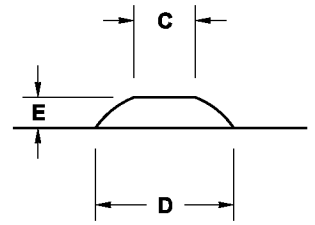

TRUNCATED DOME

SECTION (A)

	MIN.	MAX.
A	1.60"	2.40"
B	0.65"	—
C	0.45"	0.90"
D	0.9"	1.40"
E	0.2"	0.2"

SEE STANDARD SPECIFICATIONS FOR COLOR OF SURFACE

TRUNCATED DOME SPACING
SEE NOTE 3

TRUNCATED DOME DETAILS

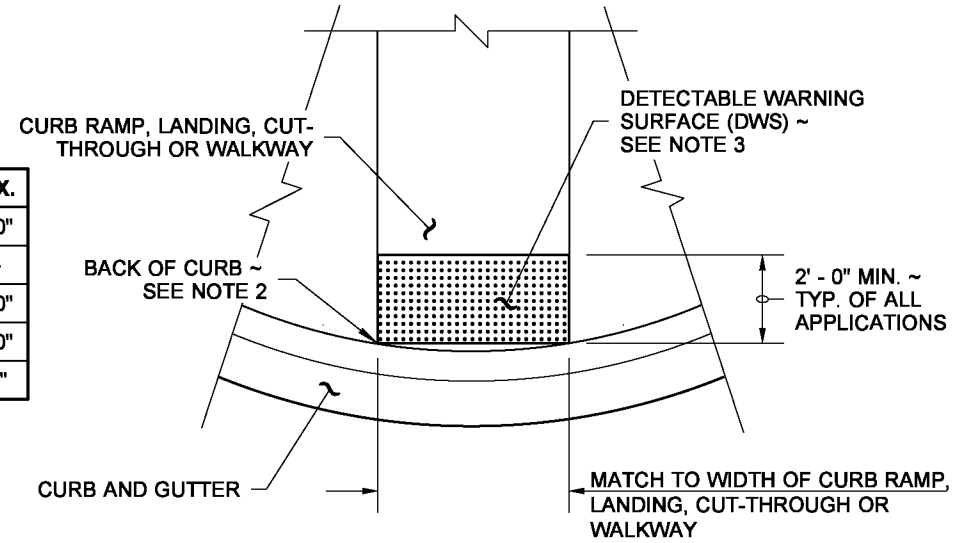

DETECTABLE WARNING SURFACE DETAIL

NOTES

1. The Detectable Warning Surface (DWS) shall extend the full width of the curb ramp (exclusive of flares) or the landing.
2. The Detectable Warning Surface shall be placed at the back of curb, and need not follow the radius.
3. The rows of truncated domes shall be aligned to be perpendicular to the grade break at the back of curb.
4. The rows of truncated domes shall be aligned to be parallel to the direction of travel.
5. If curb and gutter are not present, such as a shared-use path connection, the Detectable Warning Surface shall be placed at the pavement edge.
6. See **Standard Plans** for sidewalk and curb ramp details.
7. If a curb ramp is required, the location of the Detectable Warning Surface must be at the bottom of the ramp and within the required distance from the rail.
8. When the grade break between the curb ramp and the landing is less than or equal to 5 ft. from the back of curb at all points, place the Detectable Warning Surface on the bottom of the curb ramp.

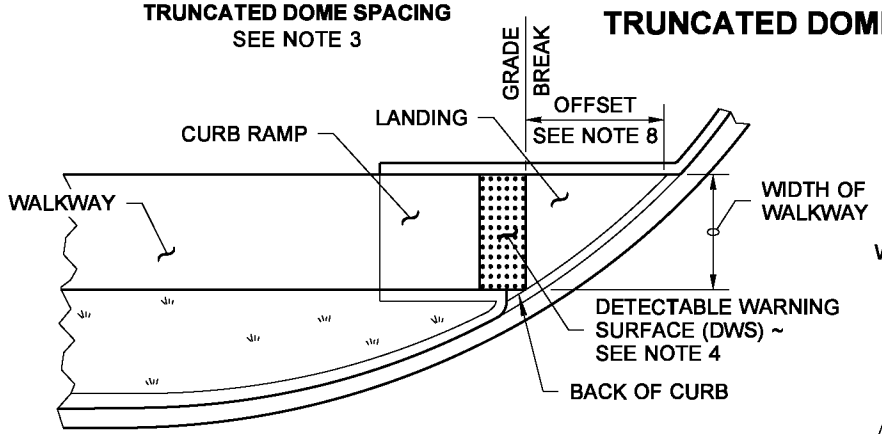

SINGLE DIRECTION CURB RAMP
(GRADE BREAK BETWEEN CURB AND LANDING ≤ 5 FT. FROM BACK OF CURB)
(SEE NOTE 6)

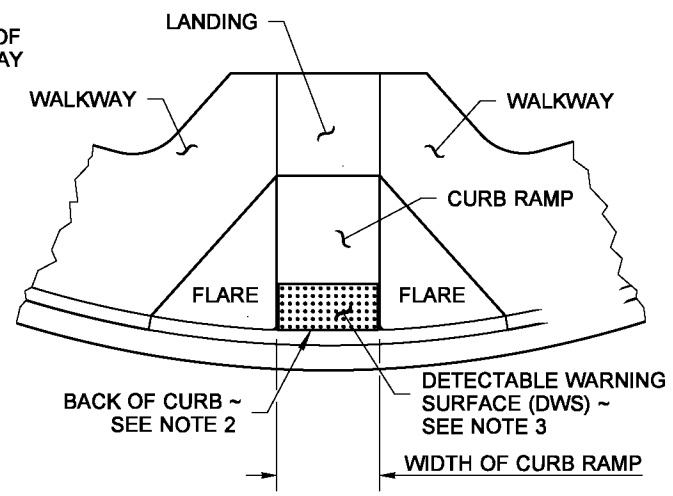

PERPENDICULAR CURB RAMP
(SEE NOTE 6)

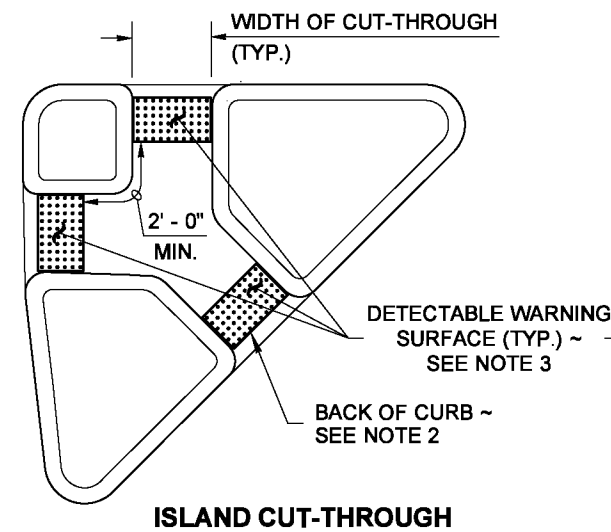

ISLAND CUT-THROUGH

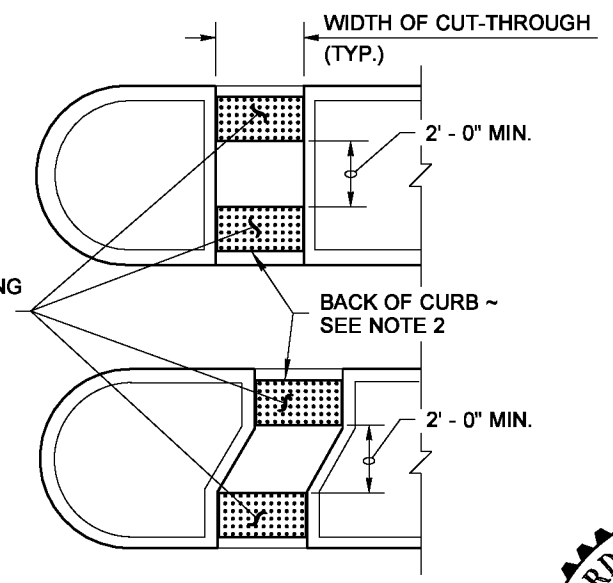

MEDIAN CUT-THROUGH

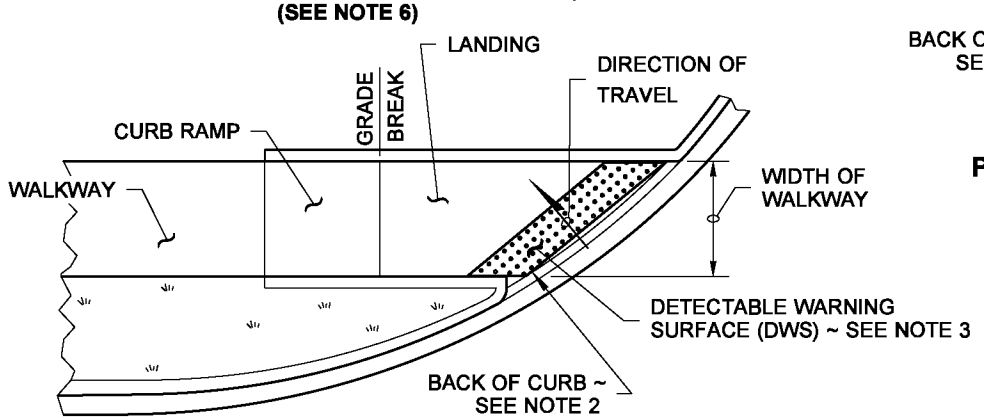

SINGLE DIRECTION CURB RAMP
(GRADE BREAK BETWEEN CURB AND LANDING > 5 FT. FROM BACK OF CURB)
(SEE NOTE 6)

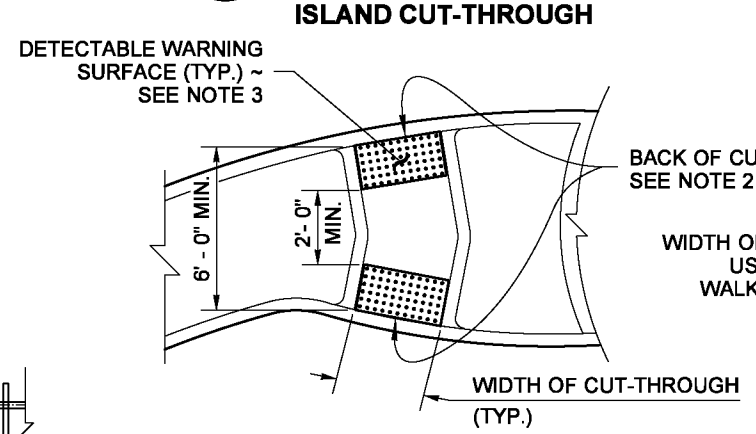

ROUNDABOUT SPLITTER ISLAND

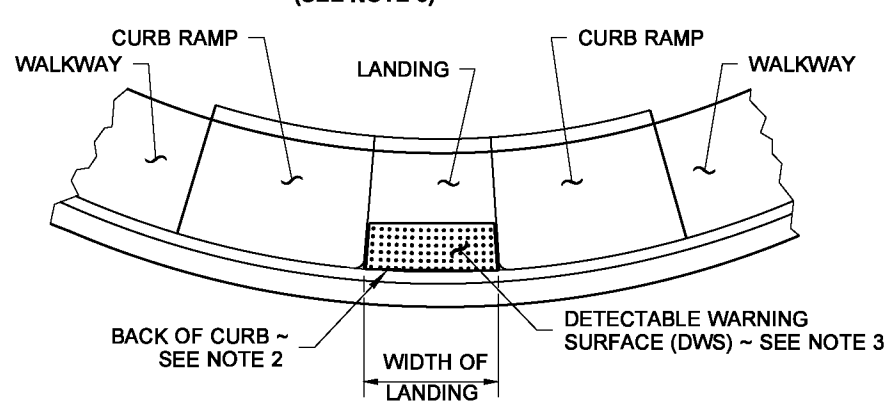

PARALLEL CURB RAMP
(SEE NOTE 6)

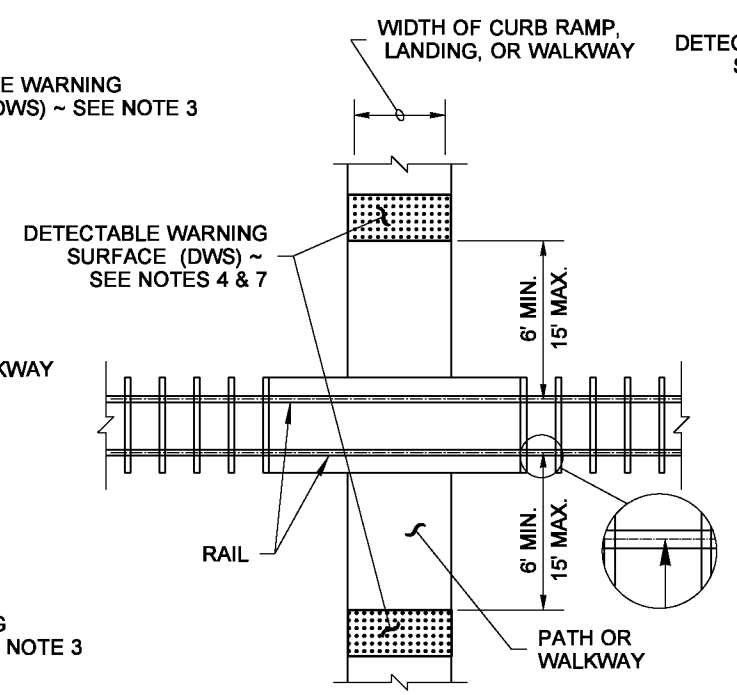

PEDESTRIAN RAILROAD CROSSING

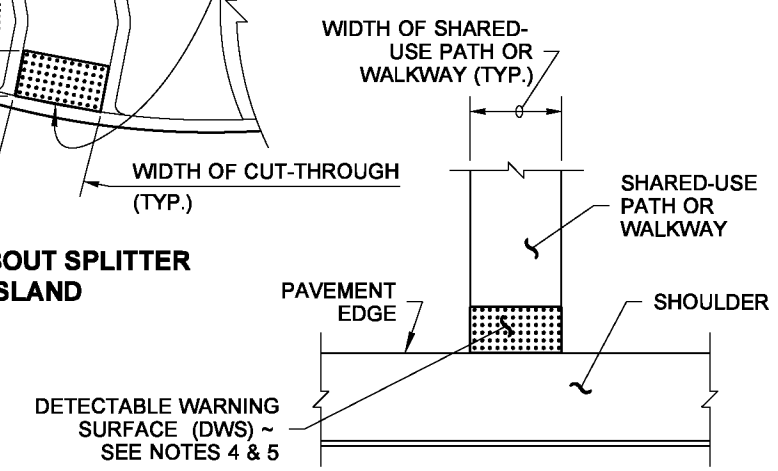

SHARED-USE PATH CONNECTION

PLACEMENT GUIDELINES

NOTE: THIS PLAN IS NOT A LEGAL ENGINEERING DOCUMENT BUT AN ELECTRONIC DUPLICATE. THE ORIGINAL, SIGNED BY THE ENGINEER AND APPROVED FOR PUBLICATION, IS KEPT ON FILE AT THE WASHINGTON STATE DEPARTMENT OF TRANSPORTATION. A COPY MAY BE OBTAINED UPON REQUEST.

DETECTABLE WARNING SURFACE

STANDARD PLAN F-45.10-01

SHEET 1 OF 1 SHEET

APPROVED FOR PUBLICATION

Pasco Bakotich III — STATE DESIGN ENGINEER

06/21/12 — DATE

Washington State Department of Transportation

DRAWN BY: FERN LIDDELL

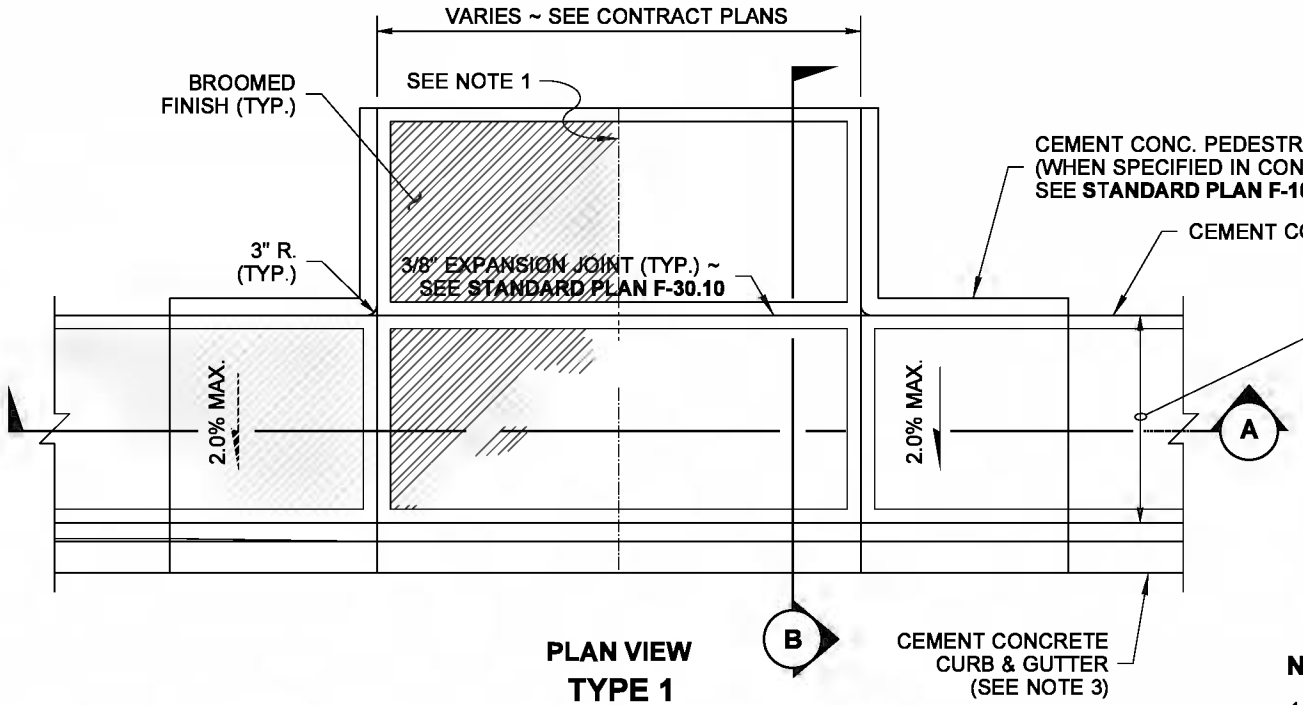

PLAN VIEW
TYPE 1

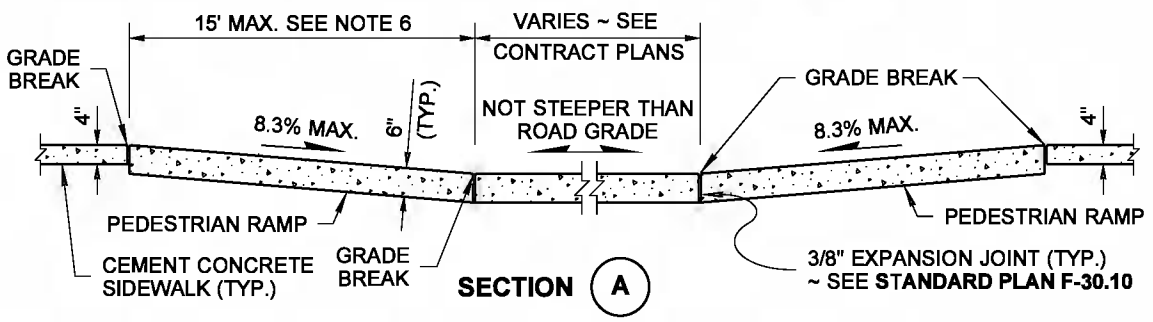

SECTION (A)

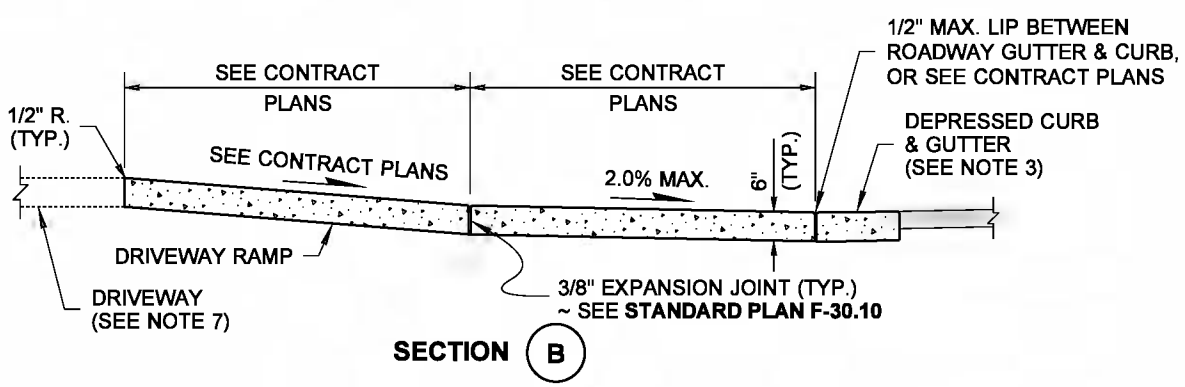

SECTION (B)

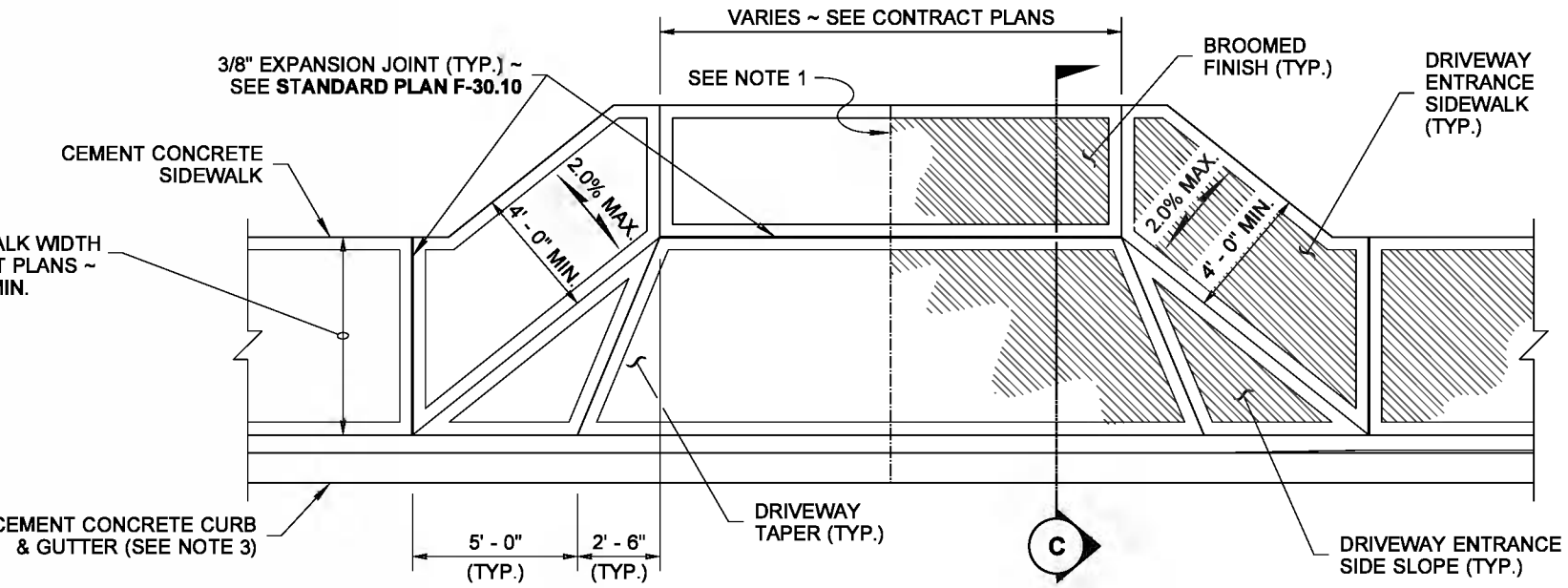

PLAN VIEW
TYPE 2

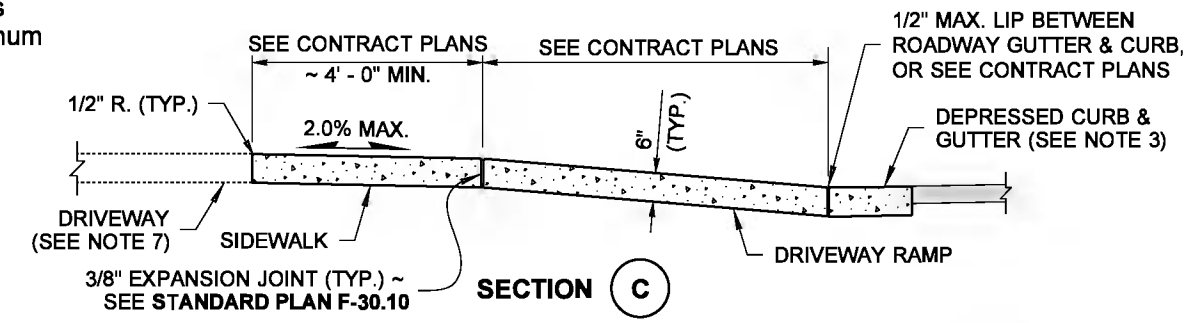

SECTION (C)

NOTES

1. When the driveway width exceeds 15 feet, construct a full depth expansion joint with 3/8" joint filler along the driveway centerline. See **Standard Plan F-30.10.** Construct expansion joints parallel with the centerline as required at 15 feet maximum spacing when driveway widths exceed 30 feet.
2. See **Standard Plan F-30.10** for sidewalk details.
3. Curb and gutter shown; see the Contract Plans for the curb design specified. See **Standard Plan F-10.12** for Curb Details.
4. Avoid placing drainage structures, junction boxes or other obstructions in front of driveway entrances.
5. Where "GRADE BREAK" is called out, the entire length of the line between the two adjacent surface planes shall be flush.
6. The curb ramp maximum running slope shall not require the ramp length to exceed 15 feet to avoid chasing the slope indefinitely when connecting to steep grades. When applying the 15 foot max. length, the running slope of the curb ramp shall be as flat as feasable.
7. Pay item does not include driveway. See Contract Plans.

LEGEND

SLOPE IN EITHER DIRECTION

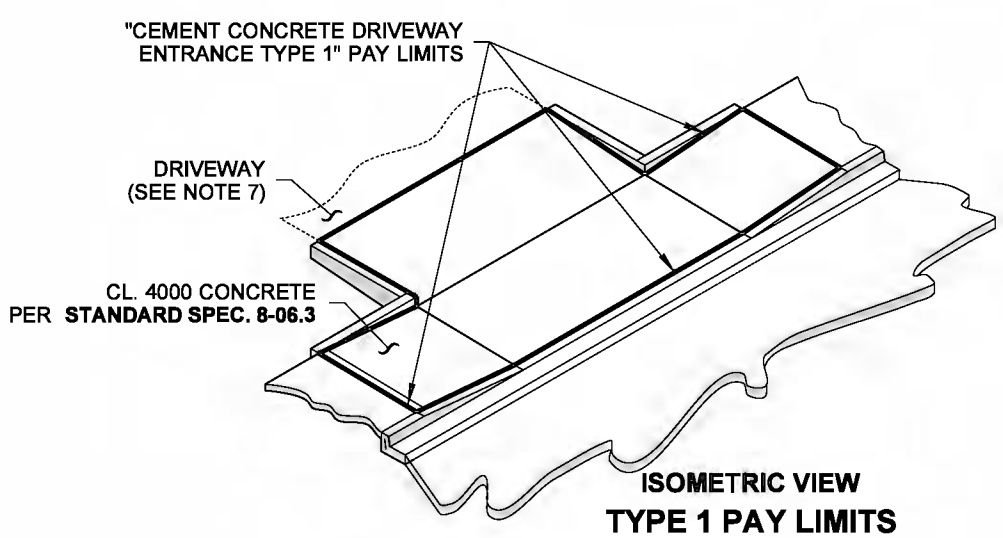

ISOMETRIC VIEW
TYPE 1 PAY LIMITS

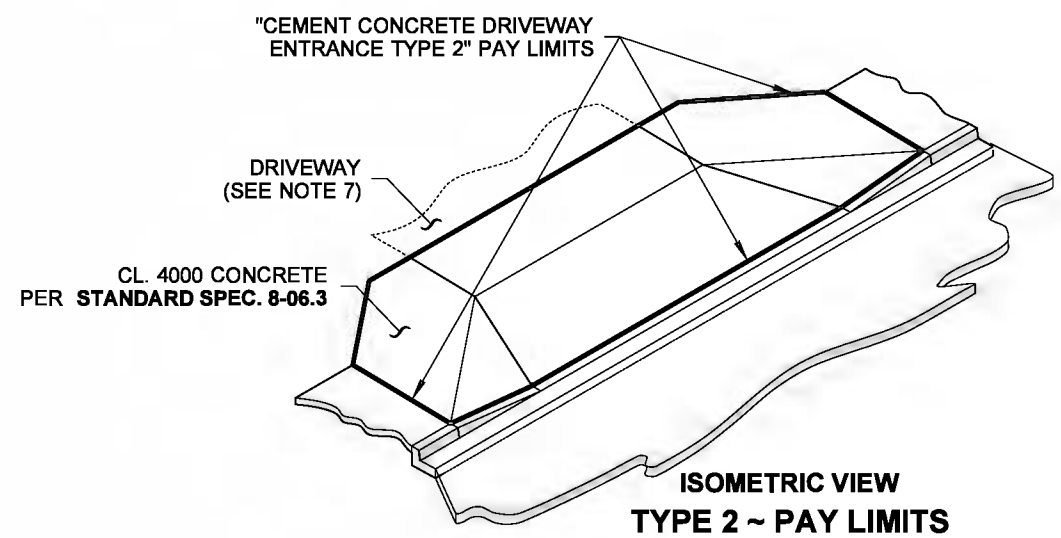

ISOMETRIC VIEW
TYPE 2 ~ PAY LIMITS

DRAWN BY: FERN LIDDELL

NOTE: THIS PLAN IS NOT A LEGAL ENGINEERING DOCUMENT BUT AN ELECTRONIC DUPLICATE. THE ORIGINAL, SIGNED BY THE ENGINEER AND APPROVED FOR PUBLICATION, IS KEPT ON FILE AT THE WASHINGTON STATE DEPARTMENT OF TRANSPORTATION. A COPY MAY BE OBTAINED UPON REQUEST.

CEMENT CONCRETE DRIVEWAY ENTRANCE TYPES 1, 2, 3 & 4
STANDARD PLAN F-80.10-02

SHEET 1 OF 2 SHEETS

APPROVED FOR PUBLICATION

Pasco Bakotich III — STATE DESIGN ENGINEER
03-15-12 — DATE

Washington State Department of Transportation

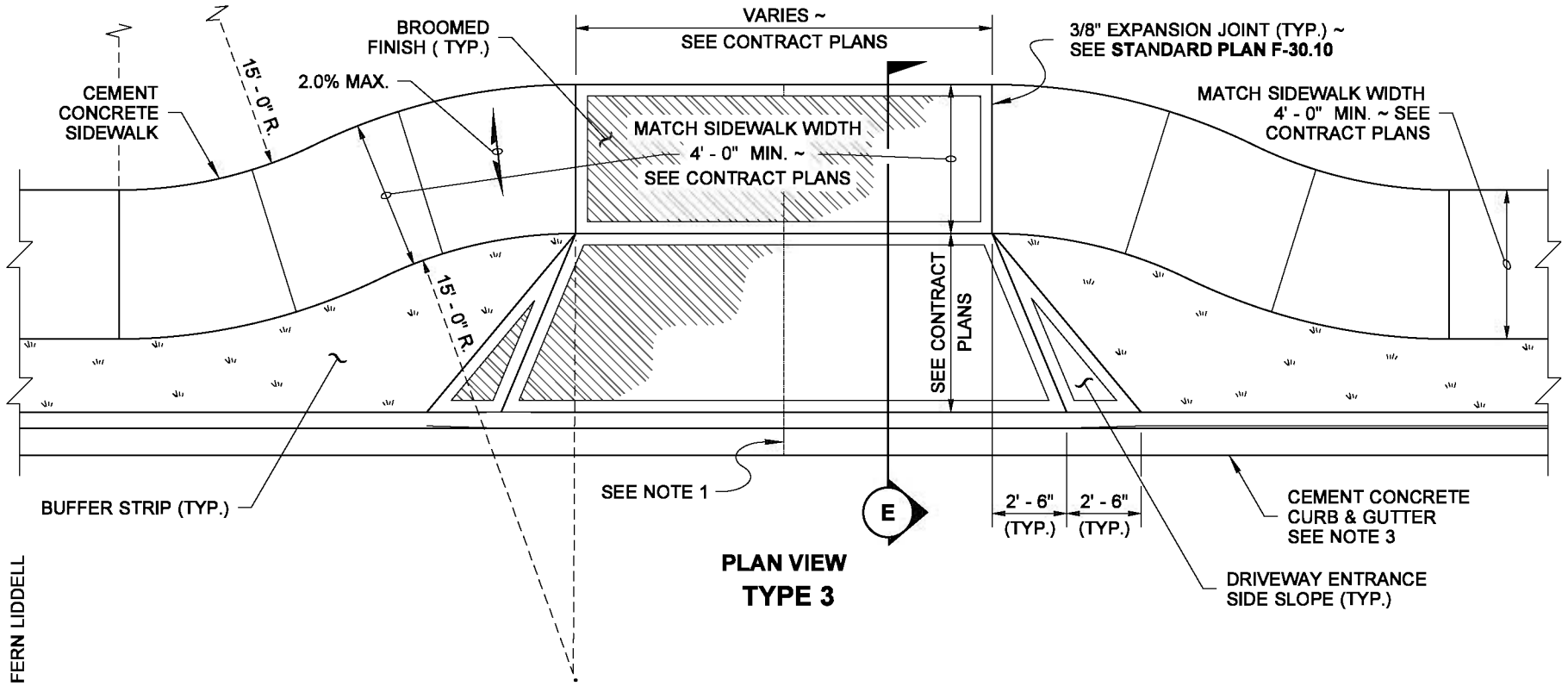

PLAN VIEW
TYPE 3

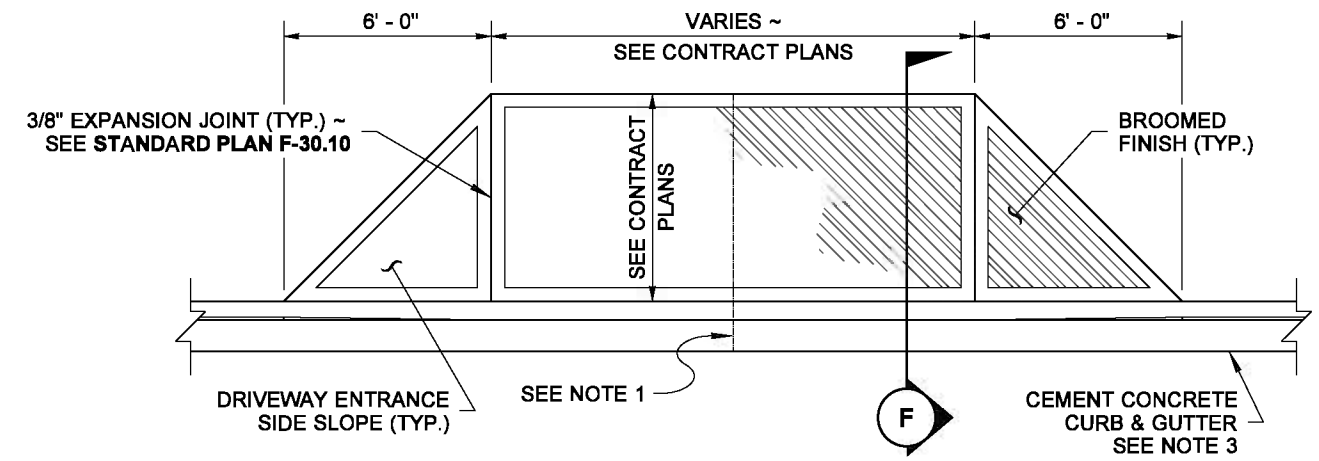

PLAN VIEW
TYPE 4*

*THIS ENTRANCE TYPE SHALL NOT BE USED ALONG A PEDESTRIAN ROUTE

DRAWN BY: FERN LIDDELL

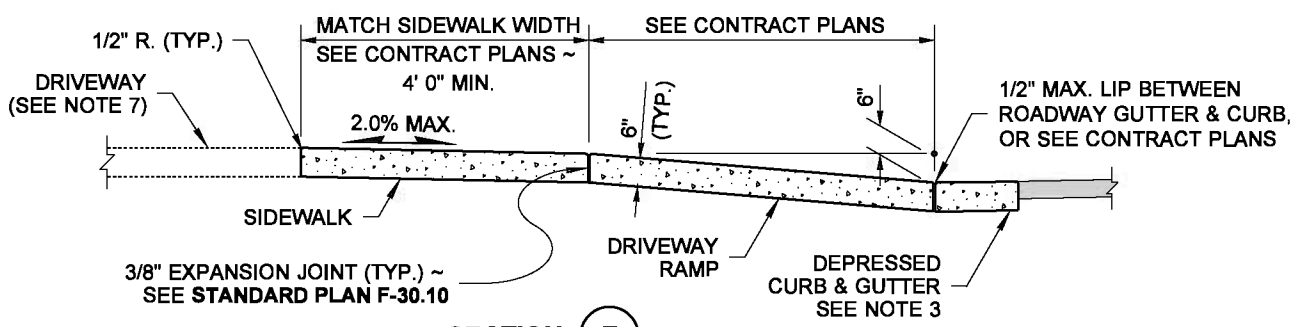

SECTION E

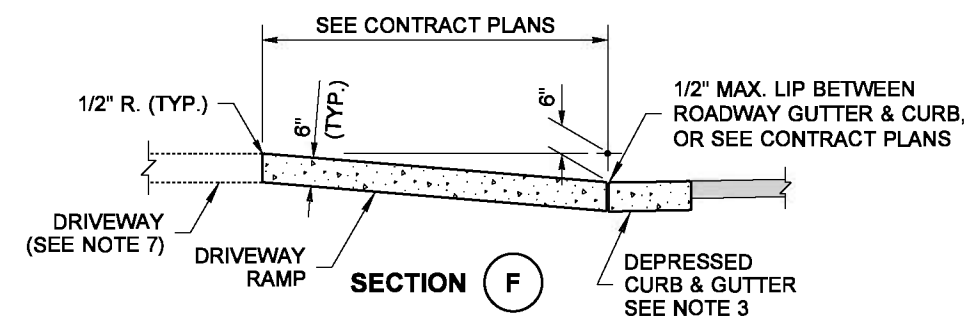

SECTION F

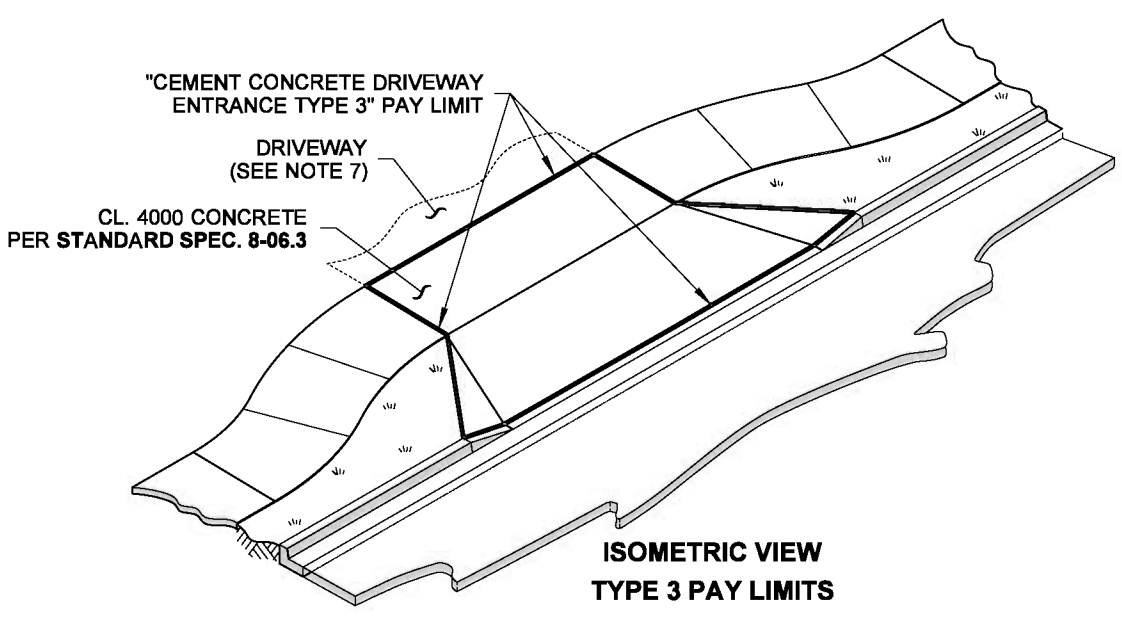

ISOMETRIC VIEW
TYPE 3 PAY LIMITS

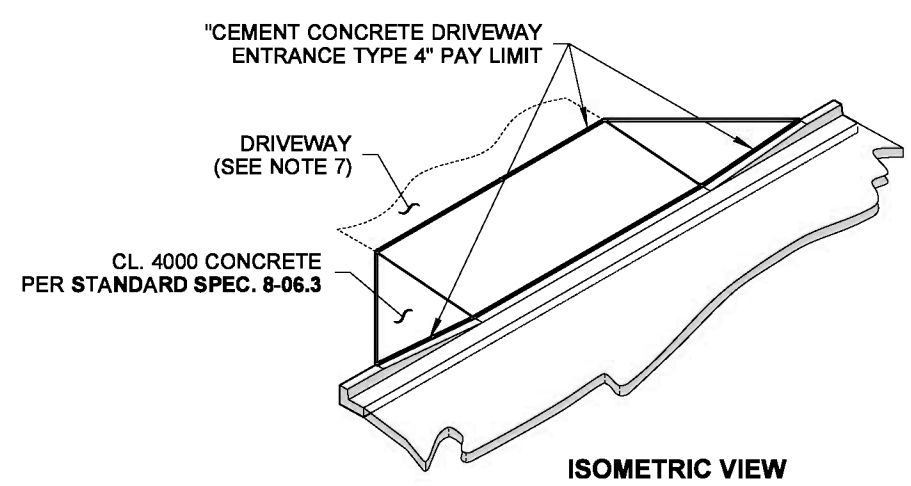

ISOMETRIC VIEW
TYPE 4 PAY LIMITS

NOTE: THIS PLAN IS NOT A LEGAL ENGINEERING DOCUMENT BUT AN ELECTRONIC DUPLICATE. THE ORIGINAL, SIGNED BY THE ENGINEER AND APPROVED FOR PUBLICATION, IS KEPT ON FILE AT THE WASHINGTON STATE DEPARTMENT OF TRANSPORTATION. A COPY MAY BE OBTAINED UPON REQUEST.

CEMENT CONCRETE DRIVEWAY ENTRANCE TYPES 1, 2, 3 & 4
STANDARD PLAN F-80.10-02

SHEET 2 OF 2 SHEETS

APPROVED FOR PUBLICATION

Pasco Bakotich III — STATE DESIGN ENGINEER
03-15-12 — DATE

Washington State Department of Transportation

DRAWN BY: BILL BERENS

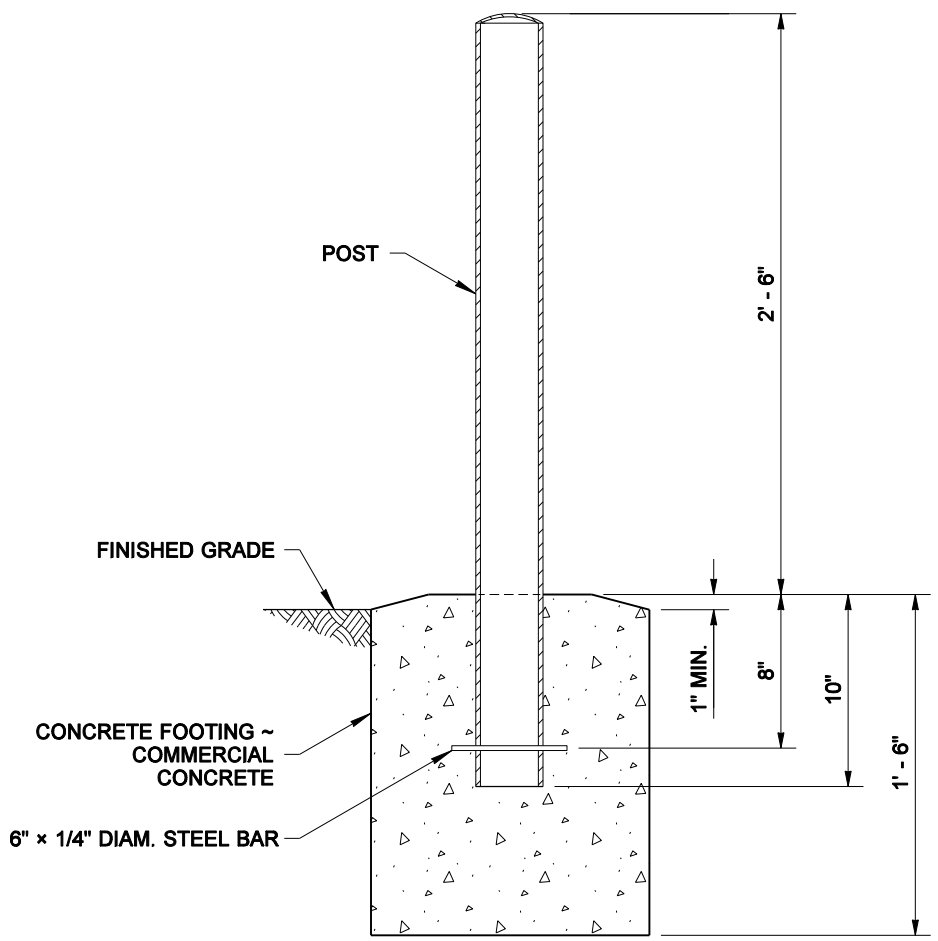

SECTION (A)

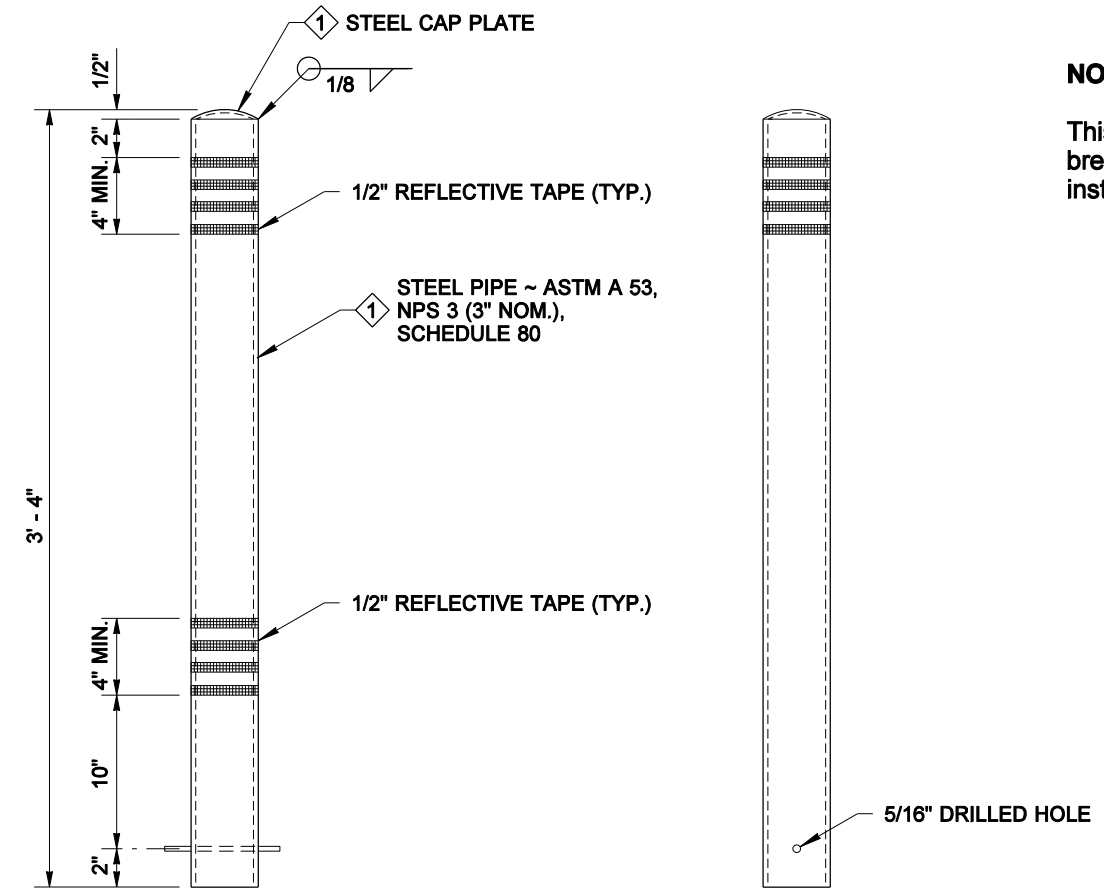

FRONT VIEW

SIDE VIEW

1 PAINT ASSEMBLY WITH A "HIGHLY VISIBLE" COLOR.
(SAFETY YELLOW IS ACCEPTABLE)

POST

NOTE

This bollard does not have an effective breakaway design feature and cannot be installed within the Design Clear Zone.

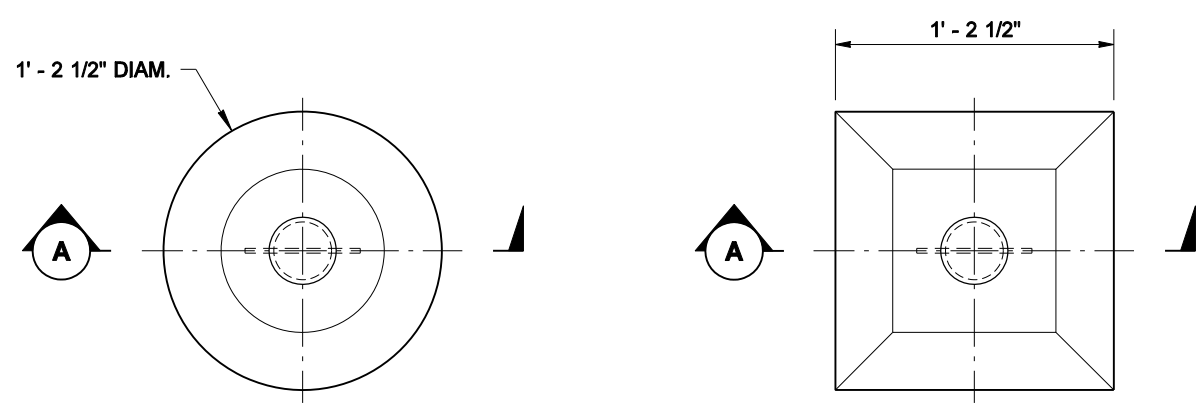

ROUND FOOTING

SQUARE FOOTING

PLAN VIEW

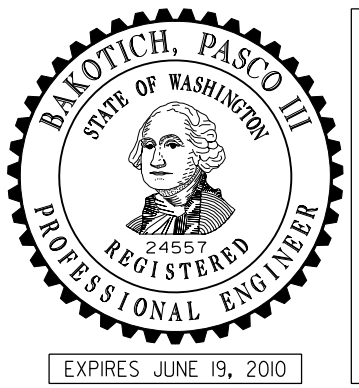

NOTE: THIS PLAN IS NOT A LEGAL ENGINEERING DOCUMENT BUT AN ELECTRONIC DUPLICATE. THE ORIGINAL, SIGNED BY THE ENGINEER AND APPROVED FOR PUBLICATION, IS KEPT ON FILE AT THE WASHINGTON STATE DEPARTMENT OF TRANSPORTATION. A COPY MAY BE OBTAINED UPON REQUEST.

BOLLARD TYPE 2

STANDARD PLAN H-60.20-01

SHEET 1 OF 1 SHEET

APPROVED FOR PUBLICATION

Pasco Bakotich III — STATE DESIGN ENGINEER

07-03-08 — DATE

Washington State Department of Transportation

APPENDIX I

WSDOT AMENDMENTS

INTRO.AP1

INTRODUCTION

The following Amendments and Special Provisions shall be used in conjunction with the 2014 Standard Specifications for Road, Bridge, and Municipal Construction.

AMENDMENTS TO THE STANDARD SPECIFICATIONS

The following Amendments to the Standard Specifications are made a part of this contract and supersede any conflicting provisions of the Standard Specifications. For informational purposes, the date following each Amendment title indicates the implementation date of the Amendment or the latest date of revision.

Each Amendment contains all current revisions to the applicable section of the Standard Specifications and may include references which do not apply to this particular project.

1-02.AP1

Section 1-02, Bid Procedures and Conditions
April 7, 2014

1-02.8(1) Noncollusion Declaration

The third paragraph is revised to read:

> Therefore, by including the Non-collusion Declaration as part of the signed bid Proposal, the Bidder is deemed to have certified and agreed to the requirements of the Declaration.

1-03.AP1

Section 1-03, Award and Execution of Contract
March 3, 2014

1-03.4 Contract Bond

The last word of item 3 is deleted.

Item 4 is renumbered to 5.

The following is inserted after item 3 (after the preceding Amendments are applied):

4. Be conditioned upon the payment of taxes, increases, and penalties incurred on the project under titles 50, 51, and 82 RCW; and

1-04.AP1

Section 1-04, Scope of the Work
April 7, 2014

1-04.4 Changes

In the third paragraph, item number 1 and 2 are revised to read:

a. When the character of the Work as altered differs materially in kind or nature from that involved or included in the original proposed construction; or
b. When an item of Work, as defined elsewhere in the Contract, is increased in excess of 125 percent or decreased below 75 percent of the original Contract quantity. For the purpose of this Section, an item of Work will be defined as any item that qualifies for adjustment under the provisions of Section 1-04.6.

1-07.AP1

Section 1-07, Legal Relations and Responsibilities to the Public
January 6, 2014

1-07.2 State Taxes

This section is revised to read:

The Washington State Department of Revenue has issued special rules on the state sales tax. Sections 1-07.2(1) through 1-07.2(3) are meant to clarify those rules. The Contracting Agency will not adjust its payment if the Contractor bases a Bid on a misunderstood tax liability.

The Contracting Agency may deduct from its payments to the Contractor, retainage or lien the bond, in the amount the Contractor owes the State Department of Revenue, whether the amount owed relates to the Contract in question or not. Any amount so deducted will be paid into the proper State fund on the contractor's behalf. For additional information on tax rates and application refer to applicable RCWs, WACs or the Department of Revenue's website.

1-07.2(1) State Sales Tax: Work Performed on City, County, or Federally-Owned Land

This section including title is revised to read:

1-07.2(1) State Sales Tax: WAC 458-20-171 – Use Tax

For Work designated as Rule 171, **Use Tax,** the Contractor shall include for compensation the amount of any taxes paid in the various unit Bid prices or other Contract amounts. Typically, these taxes are collected on materials incorporated into the project and items such as the purchase or rental of; tools, machinery, equipment, or consumable supplies not integrated into the project.

The Summary of Quantities in the Contract Plans identifies those parts of the project that are subject to **Use Tax** under Section 1-07.2(1).

1-07.2(2) State Sales Tax: Work on State-Owned or Private Land

This section including title is revised to read:

1-07.2(2) State Sales Tax: WAC 458-20-170 – Retail Sales Tax

For Work designated as Rule 170, **Retail Sales Tax,** the Contractor shall collect from the Contracting Agency, **Retail Sales Tax** on the full Contract price. The Contracting Agency will automatically add this **Retail Sales Tax** to each payment to the Contractor and for this reason; the Contractor shall not include the **Retail Sales Tax** in the unit Bid prices or in any other Contract amount. However, the Contracting Agency will not provide additional compensation to the Prime Contractor or Subcontractor for **Retail Sales Taxes** paid by the Contractor in addition to the **Retail Sales Tax** on the total

contract amount. Typically, these taxes are collected on items such as the purchase or rental of; tools, machinery, equipment, or consumable supplies not integrated into the project. Such sales taxes shall be included in the unit Bid prices or in any other Contract amounts.

The Summary of Quantities in the Contract Plans identifies those parts of the project that are subject to **Retail Sales Tax** under Section 1-07.2(2).

1-07.2(3) Services

This section is revised to read:

Any contract wholly for professional or other applicable services is generally not subject to **Retail Sales Tax** and therefore the Contractor shall not collect **Retail Sales Tax** from the Contracting Agency on those Contracts. Any incidental taxes paid as part of providing the services shall be included in the payments under the contract.

1-08.AP1

Section 1-08, Prosecution and Progress
May 5, 2014

1-08.1 Subcontracting

The eighth paragraph is revised to read:

On all projects, the Contractor shall certify to the actual amounts paid to Disadvantaged, Minority, Women's, or Small Business Enterprise firms that were used as Subcontractors, lower tier subcontractors, manufacturers, regular dealers, or service providers on the Contract. This Certification shall be submitted to the Project Engineer on a monthly basis each month between Execution of the Contract and Physical Completion of the contract using the application available at: https://remoteapps.wsdot.wa.gov/mapsdata/tools/dbeparticipation. The monthly report is due 20 calendar days following the end of the month. A monthly report shall be submitted for every month between Execution of the Contract and Physical Completion regardless of whether payments were made or work occurred.

The ninth paragraph is deleted.

1-10.AP1

Section 1-10, Temporary Traffic Control
April 7, 2014

1-10.1(1) Materials

The following material reference is deleted from this section:

Barrier Drums 9-35.8

1-10.1(2) Description

The first paragraph is revised to read:

The Contractor shall provide flaggers, and all other personnel required for labor for traffic control activities and not otherwise specified as being furnished by the Contracting Agency.

1-10.2(1) General

In the third paragraph, the first two sentences are revised to read:

The primary and alternate TCS shall be certified by one of the organizations listed in the Special Provisions. Possession of a current Washington State TCS card and flagging card by the primary and alternate TCS is mandatory.

1-10.2(1)B Traffic Control Supervisor

The first paragraph is revised to read:

A Traffic Control Supervisor (TCS) shall be present on the project whenever flagging or other traffic control labor is being utilized or less frequently, as authorized by the Engineer.

The last paragraph is revised to read:

The TCS may perform the Work described in Section 1-10.3(1)A Flaggers or in Section 1-10.3(1)B Other Traffic Control Labor and be compensated under those Bid items, provided that the duties of the TCS are accomplished.

1-10.2(2) Traffic Control Plans

The first paragraph is revised to read:

The traffic control plan or plans appearing in the Contract documents show a method of handling vehicle, bicycle, and pedestrian traffic. All construction signs, flaggers, and other traffic control devices are shown on the traffic control plan(s) except for emergency situations. If the Contractor proposes adding the use of flaggers to a plan, this will constitute a modification requiring approval by the Engineer. The modified plans shall show locations for all the required advance warning signs and a safe, protected location for the flagging station. If flagging is to be performed during hours of darkness, the plan shall include appropriate illumination for the flagging station.

In the second paragraph, the second sentence is revised to read:

Any Contractor-proposed modification, supplement or replacement shall show the necessary construction signs, flaggers, and other traffic control devices required to support the Work.

1-10.3(1) Traffic Control Labor

The first paragraph is revised to read:

The Contractor shall furnish all personnel for flagging, for the execution of all procedures related to temporary traffic control and for the setup, maintenance and removal of all temporary traffic control devices and construction signs necessary to control vehicular, bicycle, and pedestrian traffic during construction operations.

1-10.3(1)A Flaggers and Spotters

This section's title is revised to read:

Flaggers

The first paragraph is revised to read:

Flaggers shall be posted where shown on approved Traffic Control Plans or where directed by the Engineer. All flaggers shall possess a current flagging card issued by the State of Washington, Oregon, Montana, or Idaho. The flagging card shall be immediately available and shown to the Contracting Agency upon request.

The last paragraph is deleted.

1-10.3(1)B Other Traffic Control Labor

This section is revised to read:

In addition to flagging duties, the Contractor shall provide personnel for all other traffic control procedures required by the construction operations and for the labor to install, maintain and remove any traffic control devices shown on Traffic Control Plans.

1-10.3(3)B Sequential Arrow Signs

This section is supplemented with the following sentence:

When used in the caution mode, the four corner mode shall be used.

1-10.3(3)F Barrier Drums

This section including title is deleted in its entirety and replaced with the following:

1-10.3(3)F Vacant

1-10.3(3)K Portable Temporary Traffic Control Signs

The fifth paragraph is revised to read:

The Project Engineer or designee will inspect the signal system at initial installation/operation and approve the signal timing. Final approval will be based on the results of the operational inspection.

1-10.4(2) Item Bids With Lump Sum for Incidentals

In the second paragraph, the first and second sentences are revised to read:

"Flaggers" will be measured by the hour. Hours will be measured for each flagging station, shown on an approved Traffic Control Plan, when that station is staffed in accordance with Section 1-10.3(1)A.

The first sentence of the last bulleted item in this section is revised to read:

Installing and removing Barricades, Traffic Safety Drums, Cones, Tubular Markers and Warning Lights and Flashers to carry out approved Traffic Control Plan(s).

1-10.5(2) Item Bids With Lump Sum for Incidentals

This section is deleted and replaced with the following:

"Traffic Control Supervisor", lump sum.

The lump sum Contract payment shall be full compensation for all costs incurred by the Contractor in performing the Work defined in Section 1-10.2(1)B.

"Pedestrian Traffic Control", lump sum.

The lump sum Contract payment shall be full compensation for all costs incurred by the Contractor in performing the Work for pedestrian traffic control defined in Section 1-10.

"Flaggers", per hour.

The unit Contract price, when applied to the number of units measured for this item in accordance with Section 1-10.4(2), shall be full compensation for all costs incurred by the Contractor in performing the Work defined in Section 1-10.3(1)A.

"Other Traffic Control Labor", per hour.

The unit Contract price, when applied to the number of units measured for this item in accordance with Section 1-10.4(2), shall be full compensation for all labor costs incurred by the Contractor in performing the Work specified for this item in Section 1-10.4(2).

"Construction Signs Class A", per square foot.

The unit Contract price, when applied to the number of units measured for this item in accordance with Section 1-10.4(2), shall be full compensation for all costs incurred by the Contractor in performing the Work described in Section 1-10.3(3)A. In the event that "Do Not Pass" and "Pass With Care" signs must be left in place, a change order, as described in Section 1-04.4, will be required. When the Bid Proposal contains the item "Sign Covering", then covering those signs indicated in the Contract will be measured and paid according to Section 8-21.

"Sequential Arrow Sign", per hour.

The unit Contract price, when applied to the number of units measured for this item in accordance with Section 1-10.4(2), shall be full compensation for all costs incurred by the Contractor in performing the Work described in Section 1-10.3(3)B.

"Portable Changeable Message Sign", per hour.

The unit Contract price, when applied to the number of units measured for this item in accordance with Section 1-10.4(2), shall be full compensation for all costs incurred by the Contractor in performing the Work for procuring all portable changeable message signs required for the project and for transporting these signs to and from the project.

"Transportable Attenuator", per each.

The unit Contract price, when applied to the number of units measured for this item in accordance with Section 1-10.4(2), shall be full compensation for all costs incurred by the Contractor in performing the Work described in Section 1-10.3(3)J except for costs

compensated separately under the items “Operation of Transportable Attenuator” and “Repair Transportable Attenuator”.

“Operation of Transportable Attenuator”, per hour.

The unit Contract price, when applied to the number of units measured for this item in accordance with Section 1-10.4(2), shall be full compensation for all costs incurred by the Contractor in performing the Work for operating transportable attenuators on the project.

“Repair Transportable Attenuator”, by force account.

All costs of repairing or replacing transportable attenuators that are damaged by the motoring public while in use as shown on an approved Traffic Control Plan will be paid for by force account as specified in Section 1-09.6. To provide a common Proposal for all Bidders, the Contracting Agency has estimated the amount of force account for “Repair Transportable Attenuator” and has entered the amount in the Proposal to become a part of the total Bid by the Contractor. Transportable attenuators damaged due to the Contractor’s operation or damaged in any manner when not in use shall be repaired or replaced by the Contractor at no expense to the Contracting Agency.

“Other Temporary Traffic Control”, lump sum.

The lump sum Contract payment shall be full compensation for all costs incurred by the Contractor in performing the Work defined in Section 1-10, and which costs are not compensated by one of the above-listed items.

“Portable Temporary Traffic Control Signal”, lump sum.

The lump sum Contract payment shall be full compensation for all costs incurred by the Contractor in performing the Work as described in Section 1-10.3(3)K, including all costs for traffic control during manual control, adjustment, malfunction, or failure of the portable traffic control signals and during replacement of failed or malfunctioning signals.

5-01.AP5

Section 5-01, Cement Concrete Pavement Rehabilitation
January 6, 2014

5-01.2 Materials

The referenced section for the following item is revised to read:

Dowel Bars	9-07.5

5-04.AP5

Section 5-04, Hot Mix Asphalt
January 6, 2014

5-04.3(7)A3 Commercial Evaluation

The second sentence in the first paragraph is revised to read:

> Mix designs for HMA accepted by commercial evaluation shall be submitted to the Project Engineer on WSDOT Form 350-042.

6-02.AP6

Section 6-02, Concrete Structures
April 7, 2014

6-02.3(1) Classification of Structural Concrete

In paragraph two, item number 1 is revised to read:

> Mix design and proportioning specified in Sections 6-02.3(2), 6-02.3(2)A and 6-02.3(2)A1.

Item number 3 is renumbered to 4.

After the preceding Amendments are applied, the following new numbered item is inserted after item number 2:

> 3. Temperature and time for placement requirements specified in Section 6-02.3(4)D.

6-02.3(2) Proportioning Materials

In the third paragraph, the first sentence is revised to read:

> The use of fly ash is required for Class 4000P concrete, except that ground granulated blast furnace slag may be substituted for fly ash at a 1:1 ratio.

In the table titled “Cementitious Requirement for Concrete”, the row beginning with “4000D” is deleted.

The fourth paragraph is revised to read:

> When both ground granulated blast furnace slag and fly ash are included in the concrete mix, the total weight of both these materials is limited to 40 percent by weight of the total cementitious material for concrete class 4000A, and 50 percent by weight of the total cementitious material for all other classes of concrete.

6-02.3(2)A Contractor Mix Design

In the first paragraph, the third sentence is revised to read:

> The required average 28 day compressive strength shall be selected in accordance with ACI 318, Chapter 5, Section 5.3.2.

In the first paragraph, the fifth sentence is revised to read:

> All proposed concrete mixes except Class 4000D shall meet the requirements in Cementitous Requirement for Concrete in Section 6-02.3(2).

In the fourth paragraph, the fourth sentence is deleted.

In the sixth paragraph, the first sentence is deleted.

In the seventh paragraph, the last sentence is deleted.

The eighth paragraph is revised to read:

> Air content for concrete Class 4000D shall conform to Section 6-02.3(2)A1. For all other concrete, air content shall be a minimum of 4.5 percent and a maximum of 7.5 percent for all concrete placed above the finished ground line.

The following new sub-section is added:

> **6-02.3(2)A1 Contractor Mix Design for Concrete Class 4000D**
> All Class 4000D concrete shall be a project specific performance mix design conforming to the following requirements:
>
> 1. Aggregate shall use combined gradation in accordance with Section 9-03.1(5) with a nominal maximum aggregate size of 1-1/2 inches.
> 2. Permeability shall be less than 2,000 coulombs at 56 days in accordance with AASHTO T 277.
> 3. Freeze-thaw durability shall be provided by one of the following methods:
> a. The concrete shall maintain an air content between 4.5 and 7.5 percent.
> b. The concrete shall maintain a minimum air content that achieves a durability factor of 90 percent, minimum, after 300 cycles in accordance with AASHTO T 161, Procedure A. This air content shall not be less than 3.0 percent. Test samples shall be obtained from concrete batches of a minimum of 3.0 cubic yards.
> 4. Scaling shall have a visual rating less than or equal to 2 after 50 cycles in accordance with ASTM C 672.
> 5. Shrinkage at 28 days shall be less than 320 micro strain in accordance with AASHTO T 160.
> 6. Modulus of elasticity shall be measured in accordance with ASTM C 469.
> 7. Density shall be measured in accordance with ASTM C 138.
>
> The Contractor shall submit the mix design in accordance with Section 6-02.3(2)A. The submittal shall include test reports for all tests listed above that follow the reporting requirements of the AASHTO/ASTM procedures. Samples for testing may be obtained from either laboratory or concrete plant batches. If concrete plant batches are used, the minimum batch size shall be 3.0 cubic yards. The Contractor shall submit the mix design to the Engineer at least 30 calendar days prior to the placement of concrete in the bridge deck.

6-02.3(4)D Temperature and Time For Placement

The first two sentences are revised to read:

Concrete temperatures shall remain between 55ºF and 90ºF while it is being placed, except that Class 4000D concrete temperatures shall remain between 55°F and 75°F during placement. Precast concrete that is heat cured in accordance with Section 6-02.3(25)D shall remain between 50ºF and 90ºF while being placed.

6-02.3(5)H Sampling and Testing for Compressive Strength and Initial Curing

The second paragraph is revised to read:

The Contractor shall provide and maintain a sufficient number of cure boxes in accordance with WSDOT FOP for AASHTO T 23 for curing concrete cylinders. The cure boxes shall be readily accessible and no more than 500 feet from the point of acceptance testing, unless otherwise approved by the Engineer. The Contractor shall also provide, maintain and operate all necessary power sources and connections needed to operate the cure boxes. The cure boxes shall be in-place and functioning at the specified temperature for curing cylinders prior to concrete placement. Concrete cylinders shall be cured in the cure boxes in accordance with WSDOT FOP for AASHTO T 23. The cure boxes shall have working locks and the Contractor shall provide the Engineer with one key to each of the locks. Once concrete cylinders are placed in the cure box, the cure box shall not be disturbed until the cylinders have been removed. The Contractor shall retain the cure box Temperature Measuring Device log and provide it to the Engineer upon request.

The following new paragraph is inserted after the last paragraph:

All cure box costs shall be incidental to the associated item of work.

6-02.3(6)A2 Cold Weather Protection

The first sentence in the first paragraph is revised to read:

This Specification applies when the weather forecast on the day of concrete placement predicts air temperatures below 35°F at any time during the 7 days following placement.

The first sentence of the second paragraph is revised to read:

The temperature of the concrete shall be maintained above 50°F during the entire curing period or 7 days, whichever is greater.

6-02.3(10)D Concrete Placement, Finishing, and Texturing

This section is supplemented with the following new sub-sections:

6-02.3(10)D1 Test Slab Using Bridge Deck Concrete

After the Contractor receives the Engineer's approval for the Class 4000D concrete mix design, and a minimum of seven calendar days prior to the first placement of bridge deck concrete, the Contractor shall construct a test slab using concrete of the approved mix design.

The test slab may be constructed on grade, shall have a minimum thickness of eight-inches, shall have minimum plan dimensions of 10-feet along all four edges, and shall be square or rectangular.

During construction of the test slab, the Contractor shall demonstrate concrete sampling and testing, use of the concrete temperature monitoring system, the concrete fogging

system, concrete placement system, and the concrete finishing operation. The Contractor shall conduct the demonstration using the same type of equipment to be used for the production bridge decks, except that the Contractor may elect to finish the test slab with a hand-operated strike-board.

After the construction of the test slab and the demonstration of bridge deck construction operations is complete, the Contractor shall remove and dispose of the test slab in accordance with Sections 2-02.3 and 2-03.3(7)C.

6-02.3(10)D2 Preparation for Concrete Placement

Before placing bridge approach slab concrete, the subgrade shall be constructed in accordance with Sections 2-06 and 5-05.3(6).

Before any concrete is placed, the finishing machine shall be operated over the entire length of the deck/slab to check screed deflection. Concrete placement may begin only if the Engineer approves after this test.

Immediately before placing concrete, the Contractor shall check (and adjust if necessary) all falsework and wedges to minimize settlement and deflection from the added mass of the concrete deck/slab. The Contractor shall also install devices, such as telltales, by which the Engineer can readily measure settlement and deflection.

6-02.3(10)D3 Concrete Placement

The placement operation shall cover the full width of the bridge deck or the full width between construction joints. The Contractor shall locate any construction joint over a beam or web that can support the deck/slab on either side of the joint. The joint shall not occur over a pier unless the Plans permit. Each joint shall be formed vertically and in true alignment. The Contractor shall not release falsework or wedges supporting bridge deck placement sections on either side of a joint until each side has aged as these Specifications require.

Placement of concrete for bridge decks and bridge approach slabs shall comply with Section 6-02.3(6). In placing the concrete, the Contractor shall:

1. Place it (without segregation) against concrete placed earlier, as near as possible to its final position, approximately to grade, and in shallow, closely spaced piles;
2. Consolidate it around reinforcing steel by using vibrators before strike-off by the finishing machine;
3. Not use vibrators to move concrete;
4. Not revibrate any concrete surface areas where workers have stopped prior to screeding;
5. Remove any concrete splashed onto reinforcing steel in adjacent segments before concreting them;
6. Maintain a slight excess of concrete in front of the screed across the entire width of the placement operation;
7. Operate the finishing machine to create a surface that is true and ready for final finish without overfinishing or bringing excessive amounts of mortar to the surface; and
8. Leave a thin, even film of mortar on the concrete surface after the last pass of the finishing machine pan.

Workers shall complete all post screeding operations without walking on the concrete. This may require work bridges spanning the full width of the deck/slab.

After removing the screed supports, the Contractor shall fill the voids with concrete (not mortar).

If the surface left by the finishing machine is porous, rough, or has minor irregularities, the Contractor shall float the surface of the concrete. Floating shall leave a smooth and even surface. Float finishing shall be kept to the minimum number of passes necessary to seal the surface. The floats shall be at least 4-feet long. Each transverse pass of the float shall overlap the previous pass by at least half the length of the float. The first floating shall be at right angles to the strike-off. The second floating shall be at right angles to the centerline of the span. A smooth riding surface shall be maintained across construction joints.

The edge of completed roadway slabs at expansion joints and compression seals shall have a 3/8-inch radius.

After floating, but while the concrete remains plastic, the Contractor shall test the entire deck/slab for flatness (allowing for crown, camber, and vertical curvature). The testing shall be done with a 10-foot straightedge held on the surface. The straightedge shall be advanced in successive positions parallel to the centerline, moving not more than one half the length of the straightedge each time it advances. This procedure shall be repeated with the straightedge held perpendicular to the centerline. An acceptable surface shall be one free from deviations of more than 1/8-inch under the 10-foot straightedge.

If the test reveals depressions, the Contractor shall fill them with freshly mixed concrete, strike off, consolidate, and refinish them. High areas shall be cut down and refinished. Retesting and refinishing shall continue until a surface conforming to the requirements specified above is produced.

6-02.3(10)D4 Monitoring Bridge Deck Concrete Temperature After Placement

The Contractor shall monitor and record the concrete temperature and ambient temperature hourly for seven calendar days after placement. The Contractor shall monitor and record concrete temperature by placing two maturity meter temperature monitoring devices in the bridge deck at locations specified by the Engineer. The Contractor shall monitor ambient temperature using maturity meters near the locations where concrete temperature is being monitored. When the bridge deck is being enclosed and heated to meet cold weather requirements, ambient temperature readings shall be taken within the enclosure. The Contractor shall submit the concrete temperature and ambient temperature data to the Engineer in spreadsheet format within 14 calendar days from placing the bridge deck concrete.

The Contractor shall submit the type and model of maturity meter temperature monitoring device, and the associated devices responsible for recording and documenting the temperature and curing time, to the Engineer at least 14 calendar days prior to the pre-concreting conference for the first bridge deck to be cast. The placement and operation of the temperature monitoring devices and associated devices will be an agenda item at the pre-concreting conference for the first bridge deck to be cast.

6-02.3(10)D5 Bridge Deck Concrete Finishing and Texturing

Except as otherwise specified for portions of bridge decks receiving an overlay or sidewalk under the same Contract, the Contractor shall texture the surface of the bridge deck as follows:

The Contractor shall texture the bridge deck using diamond tipped saw blades mounted on a power driven, self-propelled machine that is designed to texture concrete surfaces. The grooving equipment shall provide grooves that are 1/8" ± 1/64" wide, 3/16" ± 1/16" deep, and spaced at 3/4" ± 1/8". The bridge deck shall not be textured with a metal tined comb.

The Contractor shall submit the type of grooving equipment to be used to the Engineer for approval 30 calendar days prior to performing the work. The Contractor shall demonstrate that the method and equipment for texturing the bridge deck will not chip, spall or otherwise damage the deck. The Contractor shall not begin texturing the bridge deck until receiving the Engineer's approval of the Contractor's method and equipment.

Unless otherwise approved by the Engineer, the Contractor shall texture the concrete bridge deck surface either in a longitudinal direction, parallel with centerline or in a transverse direction, perpendicular with centerline. The Contractor shall texture the bridge deck surface to within 3-inches minimum and 15-inches maximum of the edge of concrete at expansion joints, within 1-foot minimum and 2-feet maximum of the curb line, and within 3-inches minimum and 9-inches maximum of the perimeter of bridge drain assemblies.

The Contractor shall contain and collect all concrete dust and debris generated by the bridge deck texturing process, and shall dispose of the collected concrete dust and debris in accordance with Section 2-03.3(7)C.

If the Plans call for placement of a sidewalk or an HMA or concrete overlay on the bridge deck, the Contractor shall produce the final finish of these areas by dragging a strip of damp, seamless burlap lengthwise over the bridge deck or by brooming it lightly. Approximately 3-feet of the drag shall contact the surface, with the least possible bow in its leading edge. It shall be kept wet and free of hardened lumps of concrete. When the burlap drag fails to produce the required finish, the Contractor shall replace it. When not in use, it shall be lifted clear of the bridge deck.

After the bridge deck has cured, the surface shall conform to the surface smoothness requirements specified in Section 6-02.3(10)D3.

The surface texture on any area repaired to address out-of-tolerance surface smoothness shall match closely that of the surrounding bridge deck area at the completion of the repair. Methods used to remove high spots shall cut through the mortar and aggregate without breaking or dislodging the aggregate or causing spalls.

6-02.3(10)D6 Bridge Approach Slab Finishing and Texturing

Bridge approach slabs shall be textured either in accordance with Section 6-02.3(10)D5, or using metal tined combs in the transverse direction, except bridge approach slabs receiving an overlay in the same Contract shall be finished as specified in Section 6-02.3(10)D5 only.

The comb shall be made of a single row of metal tines. It shall leave striations in the fresh concrete approximately 3/16-inch deep by 1/8-inch wide and spaced approximately 1/2-inch apart. The Engineer will decide actual depths at the site. If the comb has not been approved, the Contractor shall obtain the Engineer's approval by demonstrating it on a test section. The Contractor may operate the combs manually or mechanically, either singly or with several placed end to end. The timing and method used shall produce the required texture without displacing larger particles of aggregate.

Texturing shall end 2-feet from curb lines. This 2-foot untextured strip shall be hand finished with a steel trowel.

Surface smoothness, high spots, and low spots shall be addressed as specified in Section 6-02.3(10)D5. The surface texture on any area cut down or built up shall match closely that of the surrounding bridge approach slab area. The entire bridge approach slab shall provide a smooth riding surface.

6-02.3(11) Curing Concrete

Items number 1 through 4 are deleted and replaced with the following 5 new numbered items:

1. Bridge sidewalks, roofs of cut and cover tunnels — curing compound covered by white, reflective type sheeting or continuous wet curing. Curing by either method shall be for at least 10 days.
2. Bridge decks — See Section 6-02.3(11)B.
3. Bridge approach slabs (Class 4000A concrete) - 2 coats of curing compound and continuous wet cure for at least 10-days.
4. Concrete barriers and rail bases – See Section 6-02.3(11)A.
5. All other concrete surfaces — continuous wet cure for at least three days.

In the second paragraph, the first sentence is replaced with the following three new sentences:

During the continuous wet cure, the Contractor shall keep all exposed concrete surfaces saturated with water. Formed concrete surfaces shall be kept in a continuous wet cure by leaving the forms in place. If forms are removed during the continuous wet cure period, the Contractor shall treat the concrete as an exposed concrete surface.

The third paragraph is revised to read:

When curing Class 4000A, two coats of curing compound that complies with Section 9-23.2 shall be applied immediately (not to exceed 15 min.) after tining any portion of the bridge approach slab. The continuous wet cure shall be established as soon as the concrete has set enough to allow covering without damaging the finish.

In the fifth paragraph, the first sentence is revised to read:

If the Plans call for an asphalt overlay on the bridge approach slab, the Contractor shall use the clear curing compound (Type 1, Class B), applying at least 1 gallon per 150 square feet to the concrete surface.

The eighth paragraph is deleted.

6-02.3(11)B Curing Bridge Decks

This new section is supplemented with the following new sub-sections:

6-02.3(11)B1 Equipment

The Contractor shall maintain a wet sheen, without developing pooling or sheeting water, using a fogging apparatus consisting of pressure washers with a minimum nozzle output of 1,500 psi, or other means approved by the Engineer.

The Contractor shall submit a bridge deck curing plan to the Engineer a minimum 14 calendar days prior to the pre-concreting conference. The Contractor's plan shall describe the sequence and timing that will be used to fog the bridge deck, apply pre-soaked burlap, install soaker hoses and cover the deck with white reflective sheeting.

6-02.3(11)B2 Curing

The fogging apparatus shall be in place and charged for fogging prior to beginning concrete placement for the bridge deck.

The Contractor shall presoak all burlap to be used to cover the deck during curing.

Immediately after the finishing machine passes over finished concrete, the Contractor shall implement the following tasks:

1. The Contractor shall fog the bridge deck while maintaining a wet sheen without developing pooling or sheeting water.
2. The Contractor shall apply the presoaked burlap to the top surface to fully cover the deck without damaging the finish, other than minor marring of the concrete surface. The Contractor shall not apply curing compound.
3. The Contractor shall continue to keep the burlap wet by fog spraying until the burlap is covered by soaker hoses and white reflective sheeting. The Contractor shall place the soaker hoses and whiter reflective sheeting after the concrete has achieved initial set. The Contractor shall charge the soaker hoses frequently so as to keep the burlap covering the entire deck wet during the course of curing.

As an alternative to tasks 2 and 3 above, the Contractor may propose a curing system using proprietary curing blankets specifically manufactured for bridge deck curing. Details of the proprietary curing blanket system, including product literature and details of how the system is to be installed and maintained, shall be submitted to the Engineer for approval.

The wet curing regime as described shall remain in place for at least 14 consecutive calendar days.

6-02.3(12)A Construction Joints in New Construction

The third paragraph is deleted and replaced with the following three new paragraphs:

If the Plans require a roughened surface on the joint, the Contractor shall strike it off to leave grooves at right angles to the length of the member. Grooves shall be installed using one of the following options:

1. Grooves shall be ½ to 1 inch wide, ¼ to ½ inch deep, and spaced equally at twice the width of the groove. Grooves shall terminate approximately 1 ½-inches from the face of concrete.
2. Grooves shall be 1 to 2 inches wide, a minimum of ½-inch deep, and spaced a maximum of three times the width of the groove. Grooves shall terminate approximately 1 ½-inches from the face of concrete.

If the Engineer approves, the Contractor may use an alternate method to produce a roughened surface on the joint, provided that such an alternate method leaves a roughened surface of at least a ¼-inch amplitude.

If the first strike-off does not produce the required roughness, the Contractor shall repeat the process before the concrete reaches initial set. The final surface shall be clean and without laitance or loose material.

6-02.3(15) Date Numerals

The third sentence in the first paragraph is revised to read:

When an existing Structure is widened or when traffic barrier is placed on an existing Structure, the date shall be for the year in which the original Structure was completed.

6-02.3(17)A Design Loads

The fifth paragraph is revised to read:

Live loads shall consist of a minimum uniform load of not less than 25 psf, applied over the entire falsework plan area, plus the greater of:

1. Actual weights of the deck finishing equipment applied at the rails, or;
2. A minimum load of 75 pounds per linear foot applied at the edge of the bridge deck.

6-02.3(17)J Face Lumber, Studs, Wales, and Metal Forms

The second to last paragraph is deleted.

6-02.3(17)O Early Concrete Test Cylinder Breaks

The third paragraph is revised to read:

The cylinders shall be cured in the field in accordance with WSDOT FOP for AASHTO T 23 Section 10.2 Field Curing.

6-02.3(20) Grout for Anchor Bolts and Bridge Bearings

The first five paragraphs are deleted and replaced with the following two new paragraphs:

Grout shall conform to Section 9-20.3(2) for anchor bolts and for bearing assemblies with bearing plates. Grout shall conform to Section 9-20.3(3) for elastomeric bearing pads and fabric pad bearings without bearing plates.

Grout shall be a workable mix with a viscosity that is suitable for the intended application. The Contractor shall receive approval from the Engineer before using the grout.

6-02.3(26)F Prestressing Reinforcement

The last sentence in the fourth paragraph is revised to read:

> If the prestressing reinforcement will not be stressed and grouted for more than 7 calendar days after it is placed in the ducts, the Contractor shall place an approved corrosion inhibitor conforming to Federal Specification MIL-I-22110C in the ducts.

6-02.5 Payment

In the paragraph following the bid item “Commercial Concrete”, per cubic yard the second sentence is revised to read:

> All costs in connection with concrete curing, and furnishing and applying pigmented sealer to concrete surfaces as specified, shall be included in the unit contract price per cubic yard for "Conc. Class ____".

The following new paragraph is inserted after the bid item “Superstructure (name bridge)”, lump sum:

> All costs in connection with constructing, finishing and removing the bridge deck test slab as specified in Section 6-02.3(10)D1 shall be included in the lump sum Contract price for “Superstructure___” or “Bridge Deck___” for one bridge in each project, as applicable.

The bid item “Cure Box”, lump sum and paragraph following bid item are deleted.

6-05.AP6

Section 6-05, Piling
March 3, 2014

6-05.3(4) Manufacture of Steel Casings for Cast-In-Place Concrete Piles

This section is revised to read:

> The diameter of steel casings shall be as specified in the Contract. A full-penetration groove weld between welded edges is required.

6-05.3(5) Manufacture of Steel Piles

This section is revised to read:

> Steel piles shall be made of rolled steel H-pile sections, steel pipe piles, or of other structural steel sections described in the Contract. A full-penetration groove weld between welded edges is required.

6-05.3(6) Splicing Steel Casings and Steel Piles

This section is revised to read:

> The Engineer will normally permit steel piles and steel casings for cast-in-place concrete piles to be spliced. But in each case, the Contractor shall obtain approval on the need and the method for splicing. Welded splices shall be spaced at a minimum distance of 10 feet. Only welded splices will be permitted.

Splice welds for steel piles shall comply with Section 6-03.3(25) and AWS D1.1/D1.1M, latest edition, Structural Welding Code. Splicing of steel piles shall be performed in accordance with an approved weld procedure. The Contractor shall submit a weld procedure to the Engineer for approval prior to welding. For ASTM A 252 material, mill certification for each lot of pipe to be welded shall accompany the submittal. The ends of all steel pipe piling shall meet the fit-up requirements of AWS D1.1/D1.1M, latest edition, Structural Welding Code Section 5.22.3.1, "Girth Weld Alignment (Tubular)," when the material is spliced utilizing a girth weld.

Splice welds of steel casings for cast-in-place concrete piles shall be the Contractor's responsibility and shall be welded in accordance with AWS D1.1/D1.1M, latest edition, Structural Welding Code. A weld procedure submittal is not required for steel casings used for cast-in-place concrete piles. Casings that collapse or are not watertight, shall be replaced at the Contractor's expense.

6-07.AP6

Section 6-07, Painting
January 6, 2014

6-07.3(10)E Surface Preparation – Full Paint Removal

This section is revised to read:

For structures where full removal of existing paint is specified, the Contractor shall remove any visible oil, grease, and road tar in accordance with SSPC-SP 1.

Following preparation by SSPC-SP 1, all steel surfaces to be painted shall be prepared in accordance with SSPC-SP 10, near-white metal blast cleaning. Surfaces inaccessible to near-white metal blast cleaning shall be prepared in accordance with SSPC-SP 11, power tool cleaning to bare metal, as allowed by the Engineer.

6-14.AP6

Section 6-14, Geosynthetic Retaining Walls
April 7, 2014

6-14.2 Materials

In the first paragraph, the section number next to "Anchor rods and associated nuts, washers and couplers" is revised to read:

9-06.5(4)

The following new paragraph is inserted after the first paragraph:

Anchor plate shall conform to ASTM A 36, ASTM A 572 Grade 50, or ASTM A 588.

8-01.AP8

Section 8-01, Erosion Control and Water Pollution Control
April 7, 2014

8-01.3(1)A Submittals
The first sentence in the second paragraph is revised to read:

> Modified TESC Plans shall meet all requirements of the current edition of the WSDOT Temporary Erosion and Sediment Control Manual M 3109.

8-04.AP8

Section 8-04, Curbs, Gutters, and Spillways
January 6, 2014

8-04.3(1) Cement Concrete Curbs, Gutters, and Spillways
The first sentence in the fourth paragraph is revised to read:

> Expansion joints in the curb or curb and gutter shall be spaced as shown in the Plans, and placed at the beginning and ends of curb returns, drainage Structures, bridges, and cold joints with existing curbs and gutters.

8-04.3(1)A Extruded Cement Concrete Curb
The second sentence in the second paragraph is revised to read:

> Cement concrete curbs shall be anchored to the existing pavement by placing steel reinforcing bars 1 foot on each side of every joint.

The third paragraph is revised to read:

> Steel reinforcing bars shall meet the dimensions shown in the Standard Plans.

8-09.AP8

Section 8-09, Raised Pavement Markers
April 7, 2014

8-09.3(6) Recessed Pavement Marker
The following sentence is inserted after the first sentence of the first paragraph:

> The Contractor shall ensure that grinding of the pavement does not result in any damage, (e.g. chipping, spalling or raveling) to the pavement to remain.

8-11.AP8

Section 8-11, Guardrail
April 7, 2014

8-11.3(1) Beam Guardrail

After the below Amendments to 8-11.3(1)F and 8-11.3(1)G are applied, this section is supplemented with the following new sub-section:

8-11.3(1)F Removing and Resetting Beam Guardrail

The Contractor shall remove and reset existing guardrail posts, rail element, hardware and blocks to the location shown in the Plans. The mounting height of reset rail element shall be at the height shown in the Plans. The void caused by the removal of the post shall be backfilled and compacted.

The Contractor shall remove and replace any existing guardrail posts and blocks that are not suited for re-use, as staked by the Engineer. The void caused by the removal of the post shall be backfilled and compacted. The Contractor shall then furnish and install a new guardrail post to provide the necessary mounting height.

8-11.3(1)A Erection of Posts

The second paragraph in this section is deleted.

8-11.3(1)C Terminal and Anchor Installation

The last sentence in the last paragraph is deleted.

8-11.3(1)F Plans

This section number is revised to:

8-11.3(1)G

8-11.3(1)G Guardrail Construction Exposed to Traffic

This section number is revised to:

8-11.3(1)H

8-20.AP8

Section 8-20, Illumination, Traffic Signal Systems, Intelligent Transportation Systems, and Electrical
April 7, 2014

8-20.3(8) Wiring

The second sentence in the eleventh paragraph is revised to read:

Every conductor at every wire termination, connector, or device shall have an approved wire marking sleeve bearing, as its legend, the circuit number indicated in the Contract.

8-23.AP8

Section 8-23, Temporary Pavement Markings
April 14, 2014

This section's content is deleted in its entirety and replaced with the following new sub-sections:

8-23.1 Description

The Work consists of furnishing, installing, and removing temporary pavement markings. Temporary pavement markings shall be provided where noted in the Plans; for all lane shifts and detours resulting from construction activities; or when permanent markings are removed because of construction operations.

8-23.2 Materials

Materials for temporary markings shall be paint, plastic, tape, raised pavement markers or flexible raised pavement markers. Materials for pavement markings shall meet the following requirements:

Raised Pavement Markers	9-21
Temporary Marking Paint	9-34.2(6)
Plastic	9-34.3
Glass Beads for Pavement Marking Materials	9-34.4
Temporary Pavement Marking Tape	9-34.5
Temporary Flexible Raised Pavement Markers	9-34.6

8.23.3 Construction Requirements

8-23.3(1) General

The Contractor shall select the type of pavement marking material in accordance with the Contract.

8-23.3(2) Preliminary Spotting

All preliminary layout and marking in preparation for application or removal of temporary pavement markings shall be the responsibility of the Contractor.

8-23.3(3) Preparation of Roadway Surface

Surface preparation for temporary pavement markings shall be in accordance with the manufacturer's recommendations.

8-23.3(4) Pavement Marking Application

8-23.3(4)A Temporary Pavement Markings – Short Duration

Temporary pavement markings – short duration shall meet the following requirements:

Temporary Center Line – A BROKEN line used to delineate adjacent lanes of traffic moving in opposite directions. The broken pattern shall be based on a 40-foot unit, consisting of a 4-foot line with a 36-foot gap if paint or tape is used. If temporary raised pavement markers are used, the pattern shall be based on a 40-foot unit, consisting of a grouping of three temporary raised pavement markers, each spaced 3 feet apart, with a 34 foot gap.

Temporary Edge Line – A SOLID line used on the edges of Traveled Way. The line shall be continuous if paint or tape is used. If temporary raised pavement markers are used, the line shall consist of markers installed continuously at 5-foot spacing.

Temporary Lane Line – A BROKEN line used to delineate adjacent lanes with traffic traveling in the same direction. The broken pattern shall be based on a 40-foot unit, consisting of a 4-foot line with a 36-foot gap, if paint or tape is used. If temporary raised pavement markers are used, the pattern shall be based on a 40-foot unit, consisting of a grouping of three temporary raised pavement markers, each spaced 3 feet apart, with a 34 foot gap.

Lane line and right edge line shall be white in color. Center line and left edge line shall be yellow in color. Edge lines shall be installed only if specifically required in the Contract. All temporary pavement markings shall be retroreflective.

8-23.3(4)A1 Temporary Pavement Marking Paint

Paint used for short duration temporary pavement markings shall be applied in one application at a thickness of 15 mils or 108 square feet per gallon. Glass beads shall be in accordance with Section 8-22.3(3)G.

8-23.3(4)A2 Temporary Pavement Marking Tape

Application of temporary pavement marking tape shall be in conformance with the manufacturer's recommendations.

Black mask pavement marking tape shall mask the existing line in its entirety.

8-23.3(4)A3 Temporary Raised Pavement Markers

Temporary raised pavement markers are not allowed on bituminous surface treatments.

8-23.3(4)A4 Temporary Flexible Raised Pavement Markers

Flexible raised pavement markers are required for new applications of bituminous surface treatments. Flexible raised pavement markers are not allowed on other pavement types unless otherwise specified or approved by the Engineer. Flexible raised pavement markers shall be installed with the protective cover in place. The cover shall be removed immediately after spraying asphaltic material.

8-23.3(4)B Temporary Pavement Markings – Long Duration

Application of paint, pavement marking tape and plastic for long duration pavement markings shall meet the requirements of Section 8-22.3(3); application of raised pavement markers shall meet the requirements of Section 8-09.3; and application of flexible pavement markings shall be in conformance with the manufacturer's recommendations.

8-23.3(4)C Tolerance for Lines

Tolerance for lines shall conform to Section 8-22.3(4).

8-23.3(4)D Maintenance of Pavement Markings

Temporary pavement markings shall be maintained in serviceable condition throughout the project until permanent pavement markings are installed. As directed by the Engineer; temporary pavement markings that are damaged, including normal wear by traffic, shall be repaired or replaced immediately.

Repaired and replaced pavement markings shall meet the requirements for the original pavement marking.

8-23.3(4)E Removal of Pavement Markings

Removal of temporary paint is not required prior to paving; all other temporary pavement markings shall be removed.

All temporary pavement markings that are required on the wearing course prior to construction of permanent pavement markings and are not a part of the permanent markings shall be completely removed concurrent with or immediately subsequent to the construction of the permanent pavement markings. Temporary flexible raised pavement markers on bituminous surface treatment pavements shall be cut off flush with the surface if their location conflicts with the alignment of the permanent pavement markings.

All damage to the permanent Work caused by removing temporary pavement markings shall be repaired by the Contractor at no additional cost to the Contracting Agency.

8-23.4 Measurement

Temporary pavement markings will be measured by the linear foot of each installed line or grouping of markers, with no deduction for gaps in the line or markers and no additional measurement for the second application of paint required for long duration paint lines. Short duration and long duration temporary pavement markings will be measured for the initial installation only; maintenance of lines will not be measured.

8-23.5 Payment

Payment will be made in accordance with Section 1-04.1, for each of the following Bid items that are included in the Proposal:

"Temporary Pavement Marking – Short Duration", per linear foot.

"Temporary Pavement Marking – Long Duration", per linear foot.

The unit Contract price per linear foot for "Temporary Pavement Marking – Short Duration" and "Temporary Pavement Marking – Long Duration" shall be full pay for all Work.

9-03.AP9

Section 9-03, Aggregates
April 7, 2014

9-03.1(2)C Use of Substandard Gradings

This section including title is deleted in its entirety and replaced with the following:

Vacant

9-03.14(3) Common Borrow

This section is revised to read:

Material for common borrow shall consist of granular or nongranular soil and/or aggregate which is free of deleterious material. Deleterious material includes wood, organic waste, coal, charcoal, or any other extraneous or objectionable material. The material shall not contain more than 3 percent organic material by weight. The plasticity index shall be determined using test method AASHTO T 89 and AASHTO T 90.

The material shall meet one of the options in the soil plasticity table below.

Soil Plasticity Table

Option	Sieve	Percent Passing	Plasticity Index
1	No. 200	0 - 12	N/A
2	No. 200	12.1 - 35	6 or Less
3	No. 200	Above 35	0

All percentages are by weight.

If requested by the Contractor, the plasticity index may be increased with the approval of the Engineer.

9-03.14(4) Gravel Borrow for Structural Earth Wall

In the second table, the row beginning with “pH” is revised to read:

pH	WSDOT Test Method T 417	4.5 - 9	5 – 10

9-05.AP9

Section 9-05, Drainage Structures and Culverts
April 7, 2014

9-05.13 Ductile Iron Sewer Pipe

The first paragraph is deleted.

9-07.AP9

Section 9-07, Reinforcing Steel
January 6, 2014

9-07.5(2) Corrosion Resistant Dowel Bars (for Cement Concrete Pavement)

This section’s title is revised to read:

9-07.5(2) Corrosion Resistant Dowel Bars (for Cement Concrete Pavement and Cement Concrete Pavement Rehabilitation)

9-09.AP9

Section 9-09, Timber and Lumber
January 6, 2014

9-09.3(1) General Requirements

The fourth paragraph is revised to read:

> All orders of treated timber and lumber shall be accompanied by a Certificate of Treatment record. The Certificate of Treatment showing conformance to this specification and AWPA standards shall include the following information:
>
> Name and location of the wood preserving company,
> Customer identification,
> Date of treatment and charge number,
> Type of chemical used and amount of retention,
> Treating process and identification of the Specification used,
> Boring records verifying treatment penetration for timber and lumber with a nominal dimension of 6” x 6” or larger,
> Description of material that was treated, and
> Signature of a responsible plant official.

The fifth paragraph is deleted.

The first sentence in the last paragraph is revised to read:

> All timber and lumber to be used in aquatic environments, unless specified otherwise in the Contract, shall be chemically treated using Western Wood Preservers Institute Best Management Practices (BMPs).

9-10.AP9

Section 9-10, Piling
March 3, 2014

9-10.5 Steel Piling

This section is revised to read:

> The material for rolled steel piling H-piling and pile splices shall conform to ASTM A 36, ASTM A 572 or ASTM A 992. The material for steel pipe piling and splices shall conform to one of the following requirements except as specifically noted in the Plans:
>
> 1. API 5L Grade X42 or X52 material may be used for longitudinal seam welded or helical (spiral) seam submerged-arc welded pipe piles of any diameter.
> 2. ASTM A 252 Grade 2 or 3 material may be used for longitudinal seam welded or helical (spiral) seam submerged-arc welded pipe piles of any diameter. For the purposes of welding and prequalification of base metal, steel pipe pile designated as ASTM A 252 may be treated as prequalified provided the chemical composition conforms to a prequalified base metal classification listed in Table 3.1 of the AWS D1.1/D1.1M, latest edition, Structural Welding Code, the grade of pipe piling meets or exceeds the grade specified in the Plans, and the carbon equivalent (CE) is a maximum of 0.45-percent.
> 3. ASTM A 572 or ASTM A 588 material may be used for longitudinal seam welded piles of any diameter.

For helical (spiral) seam submerged-arc welded pipe piles, the maximum radial offset of strip/plate edges shall be 1/8 inch. The offset shall be transitioned with a taper weld and the slope shall not be less than a 1 in 2.5 taper. The weld reinforcement shall not be greater than 3/16 inches and misalignment of weld beads shall not exceed 1/8 inch.

Steel soldier piles, and associated steel bars and plates, shall conform to ASTM A 36, ASTM A 572 or ASTM A 992, except as otherwise noted in the Plans.

All steel piling may be accepted by the Engineer based on the Manufacturer's Certificate of Compliance submitted in accordance with Section 1-06.3. The manufacturer's certificate of compliance submittal for steel pipe piles shall be accompanied by certified mill test reports, including chemical analysis and carbon equivalence, for each heat of steel used to fabricate the steel pipe piling.

9-14.AP9

Section 9-14, Erosion Control and Roadside Planting
April 7, 2014

9-14.4(6) Gypsum

The first sentence is revised to read:

Gypsum shall consist of Calcium Sulfate ($CaSO_4 \cdot 2H_2O$) in a pelletized or granular form.

9-14.4(7) Tackifier

This section is revised to read:

Tackifiers are used as a tie-down for soil, compost, seed, and/or mulch. Tackifiers shall contain no growth or germination-inhibiting materials and shall not reduce infiltration rates. Tackifiers shall hydrate in water and readily blend with other slurry materials.

The Contractor shall provide test results documenting the tackifier meets the requirements for Acute Toxicity, Solvents, and Heavy Metals as required in Table 1 in Section 9-14.4(2). The tests shall be performed at the manufacturer's recommended application rate.

9-14.4(8) Compost

The second paragraph is revised to read:

Compost production and quality shall comply with WAC 173-350.

9-14.4(8)A Compost Submittal Requirements

Item 2 is revised to read:

5. A copy of the Solid Waste Handling Permit issued to the manufacturer by the Jurisdictional Health Department in accordance with WAC 173-350 (Minimum Functional Standards for Solid Waste Handling).

9-14.6(2) Quality

The second and third paragraphs in this section are revised to read:

All plant material shall comply with State and Federal laws with respect to inspection for plant diseases and insect infestation. Plants must meet Washington State Department of Agriculture plant quarantines and have a certificate of inspection. Plants originating in Canada must be accompanied by a phytosanitary certificate stating the plants meet USDA health requirements.

All plant material shall be purchased from a nursery licensed to sell plants in their state or province.

9-29.AP9

Section 9-29, Illumination, Signal, Electrical
April 7, 2014

9-29.3 Fiber Optic Cable, Electrical Conductors, and Cable

The following new subsection is added:

9-29.3(3) Wire Marking Sleeves

Wire marking sleeves shall be full-circle in design, non-adhesive, printable using an indelible ink and shall fit snugly on the wire or cable. Marking sleeves shall be made from a PVC or polyolefin, and provide permanent identification for wires and cables.

9-34.AP9

Section 9-34, Pavement Marking Material
April 14, 2014

9-34.2 Paint

The second paragraph is revised to read:

Blue and black paint shall comply with the requirements of yellow paint in Section 9-34.2(4) and Section 9-34.2(5), with the exception that blue and black paints do not need to meet the requirements for titanium dioxide, directional reflectance, and contrast ratio.

9-34.5 Temporary Pavement Marking Tape

This section is revised to read:

Biodegradable tape with paper backing is not allowed.

This section is supplemented with the following new sub-sections:

9-34.5(1) Temporary Pavement Marking Tape – Short Duration

Temporary pavement marking tape for short duration shall conform to ASTM D4592 Type II except that black tape, black mask tape and the black portion of the contrast removable tape, shall be non-reflective.

9-34.5(2) Temporary Pavement Marking Tape – Long Duration

Temporary pavement marking tape for long duration shall conform to ASTM D4592 Type I. Temporary pavement marking tape for long duration, except for black tape, shall have a minimum initial coefficient of retroreflective luminance of 200 $mcd*m^{-2}*lx^{-1}$

when measured in accordance with ASTM E 2832 or ASTM E 2176. Black tape, black mask tape and the black portion of the contrast removable tape, shall be non-reflective.

9-34.6 Temporary Raised Pavement Markers

This section's title is revised to read:

Temporary Flexible Raised Pavement Markers

The second paragraph is deleted.

9-35.AP9

Section 9-35, Temporary Traffic Control Materials
April 7, 2014

9-35.0 General Requirements

The following item is deleted from the list of temporary traffic control materials:

Barrier Drums

9-35.8 Barrier Drums

This section including title is deleted in its entirety and replaced with the following:

9-35.8 Vacant

APPENDIX J
CITY OF FIFE STANDARD DETAILS FOR WATER METER AND WATER MAIN CONSTRUCTION

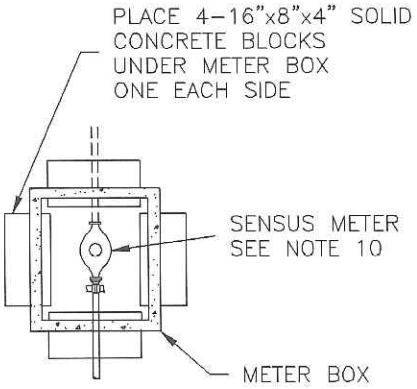

PLAN

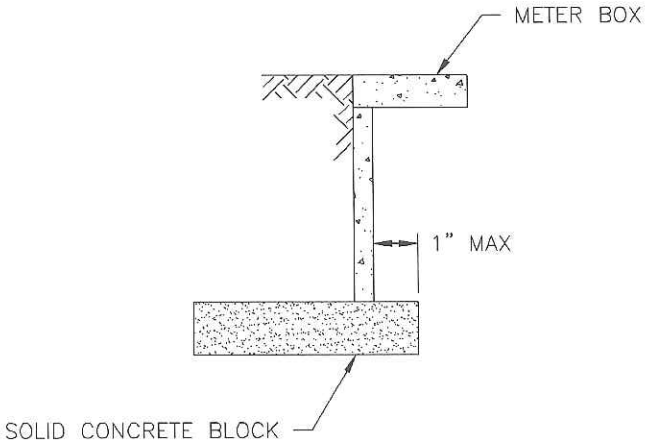

BLOCK DETAIL

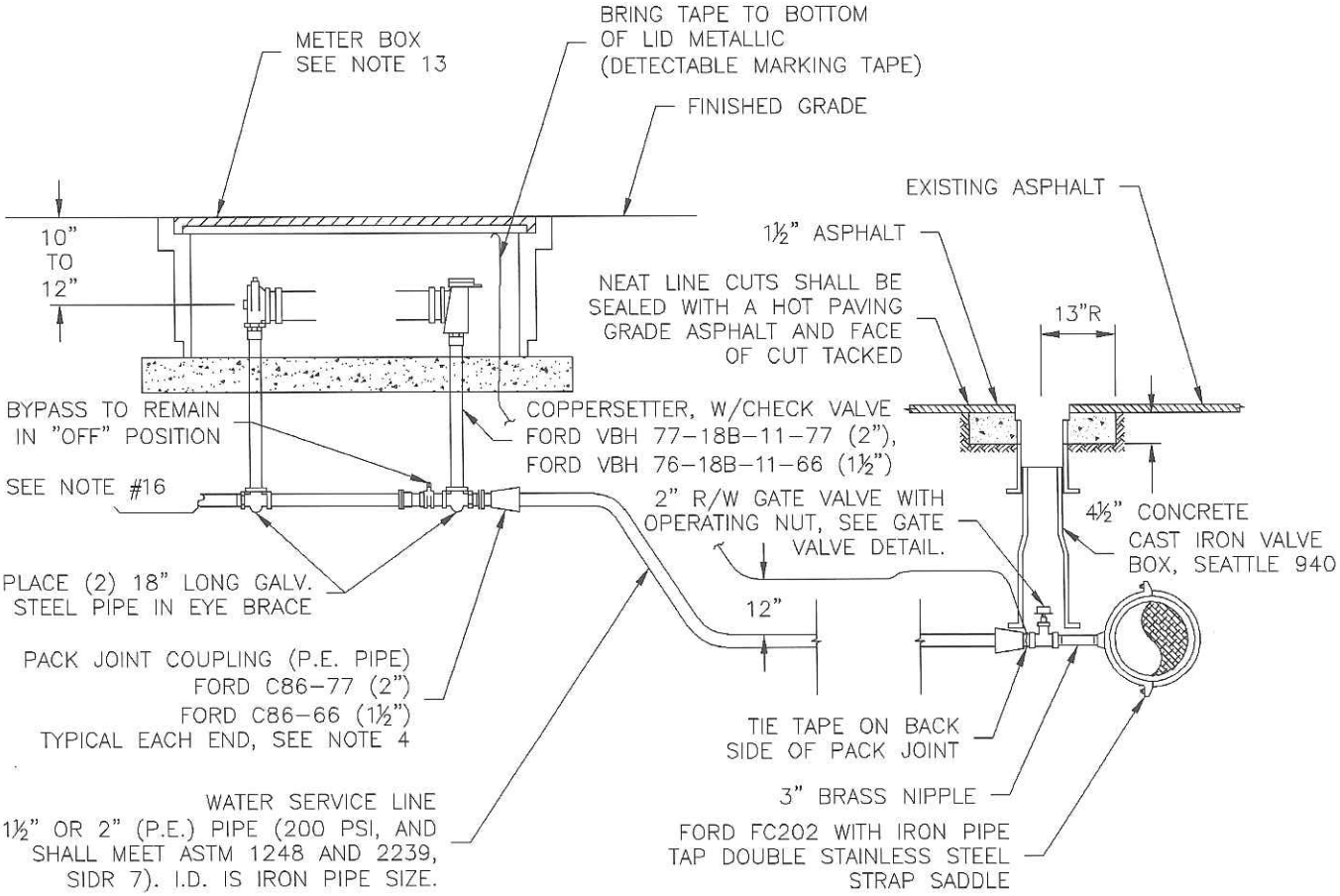

PROFILE

SHEET 1 OF 2

Approved: 12/3/2012 City Engineer Date	City of Fife	Dwg No: **W3**
WATER STANDARD DETAIL		**1 1/2" AND 2" POSITIVE DISPLACEMENT WATER SERVICE CONNECTION**

NOTES:

1. CONTRACTOR SHALL SUPPLY AND INSTALL METER.
2. ALL MATERIALS AND FITTINGS SHALL BE AS SPECIFIED.
3. WATER METER SHALL BE LOCATED IN PLANTING STRIP OR ADJACENT TO RIGHT-OF-WAY AS DIRECTED BY THE CITY.
4. ALL COUPLINGS SHALL USE PIPE INSERT STIFFNER.
5. WATER SERVICE LINE SHALL HAVE UNIFORM COVER OF 36" BELOW FINISHED GRADE WITHIN RIGHT-OF-WAY.
6. METALLIC (DETECTABLE MARKING) TAPE SHALL BE COLOR CODED BLUE AND SHALL BE IMPRINTED CONTINUOUSLY OVER ITS ENTIRE LENGTH IN PERMANENT BLACK INK THE MESSAGE "WATER LINE BURIED BELOW" AND THE WORD "CAUTION" PROMINENTLY SHOWN, TAPE SHALL BE 2" MINIMUM WIDTH.
7. FOR A 1½" WATER SERVICE A 2" GATE VALVE AND TAP SHALL BE USED AND BRASS INSERT BUSHING SHALL BE USED TO REDUCE THE 2" OPENING DOWN TO 1½".
8. VALVE BOXES SHALL BE TWO-PIECE, ADJUSTABLE, CAST IRON WITH EXTENSION PIECES (IF NECESSARY), AS MANUFACTURED BY VANRICH #940 SEATTLE OR APPROVED EQUAL. THE WORD "WATER" SHALL BE CAST IN RELIEF ON THE TOP.
9. VALVE BOX LID EARS SHALL RUN PARALLEL TO THE WATER LINE IT SERVES.
10. METER TYPE AND SIZE SHALL BE DETERMINED BY THE CITY. METERS SHALL BE SENSUS, OMNI C2 OR T2, BASED UPON ANTICIPATED USE.
11. METER REGISTER SHALL BE TOUCH-READ/PIT LID (TR/PL) TYPE AND MANUFACTURED BY SENSUS. NO SUBSTITUTIONS. METER TO READ IN 100 CUBIC FEET. METER TO HAVE ICE REGISTER.
12. METER BOX SHALL HAVE TRAFFIC LID. TRAFFIC LID SHALL HAVE 1¾" HOLE DRILLED IN THE LID (NOT IN HINGED READER PORTION OF LID), AND SHALL HAVE SENSUS MODEL 520M WITH LEAK DETECTION SINGLE PORT FLEXNET SMARTPOINT TRANSMITTER PROPERLY INSTALLED THROUGH IT, PER MANUFACTURERS RECOMMENDATIONS. METER REGISTER TOUCHREAD PIT/LID COUPLER SHALL BE PROPERLY CONNECTED TO TRANSMITTER. (MODEL 520M WITH LEAK DETECTION DUAL PORT TRANSMITTER MAY BE USED WITH PRIOR APPROVAL.)
    . TRAFFIC LID SHALL HAVE RECESSED HINGE READER LID.
13. METER BOX SHALL BE:
    - 1½" METER - FOG-TITE #2
    - 2" METER - FOG-TITE #3

UNLAWFUL INSTALLATIONS

IT SHALL BE UNLAWFUL TO INSTALL, CHANGE, BYPASS, ADJUST, REMOVE, OR ALTER ANY METERING DEVICE OR ANY PIPING ARRANGEMENT CONNECTED THERE SO AS TO SHOW ANY QUANTITY OF WATER USED ON THE PREMISES TO BE LESS THAN THE ACTUAL QUANTITY.

WATER SERVICE TO BE LEFT OFF UPON INSTALLATION. ONLY CITY WATER PERSONNEL MAY TURN ON SERVICE, AND THIS MAY ONLY BE DONE FOLLOWING A CROSS-CONNECTION INSPECTION.

14. VALVE BOXES LOCATED IN LANDSCAPED AREAS SHALL HAVE SAME DIAMETER CONCRETE COLLAR, HOWEVER THICKNESS SHALL BE 6" OF CONCRETE. NO ASPHALT SHALL BE APPLIED.
15. 10 GAUGE WIRE FROM MAINLINE TAP TO METER BOX, TAPED AT 6" INCREMENTS, AND EXPOSED 6" MINIMUM IN BOX.
16. INSTALL AND EXTEND A 1½" OR 2" BRASS NIPPLE A MINIMUM OF 1 FOOT FROM THE SETTER OUTLET ON CUSTOMER SIDE.

Approved: 10/3/2012 City Engineer Date	City of Fife	Dwg No: W3
WATER SERVICE DETAIL		1 1/2" AND 2" POSITIVE DISPLACEMENT WATER SERVICE CONNECTION

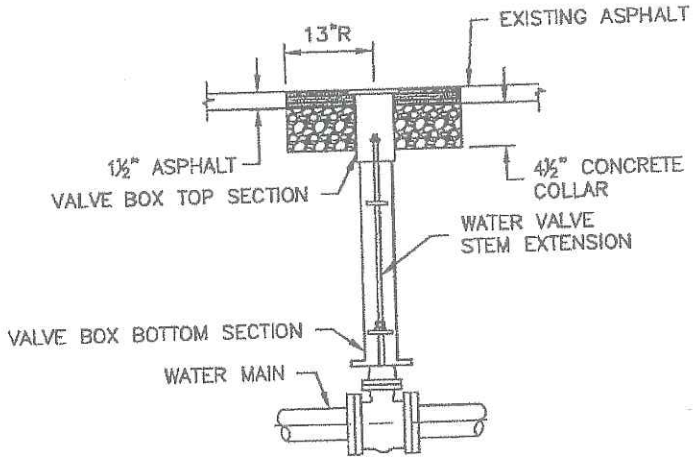

VALVE BOX

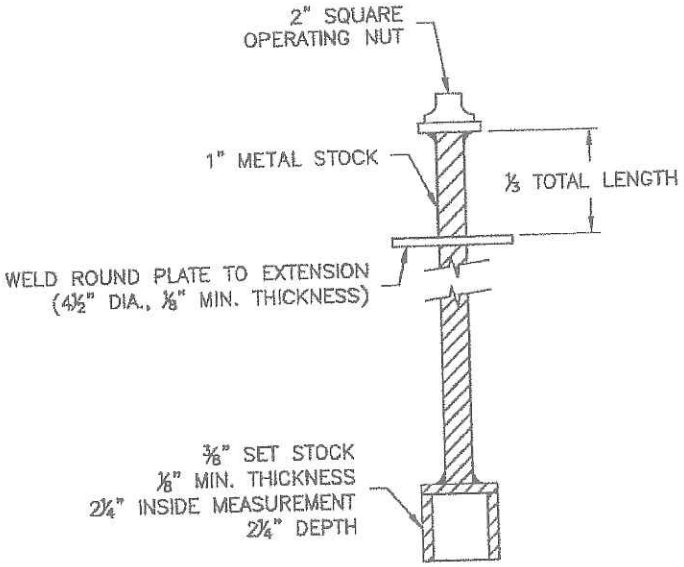

VALVE OPERATING EXTENSION

SHEET 1 OF 3

Approved: 11/20/2007 City Engineer Date	City of Fife	Dwg No: W6 WATER VALVES
WATER STANDARD DETAIL		

NOTES

1. Valve operating nut extensions are required when the valve nut is more than three (3) feet below finished grade. Extensions are to be a minimum of one (1) foot long, only one extension to be used per valve.

2. All valve operating nut extensions are to be made of steel, sized as noted and painted with 10 mils (approximately 2 coats) of Dupont 25p Epoxy Mastic or approved equal.

3. Valve boxes shall be two piece, adjustable, cast iron with extension pieces (if necessary), as manufactured by the Vanrich #940 Seattle or approved equal. The word "Water" shall be cast in relief in the top. Valve box lid ears to be parallel to water line.

4. Neat line cuts shall be sealed with a hot paving grade asphalt and face of cut tacked.

5. Water mains shall be ductile iron pipe constructed and tested in accordance with Division 7 of the latest edition of APWA Standard specifications for Road, Bridge, and Municipal Construction.

6. Section 7-09.2 of the Standard Specifications shall be supplemented by the following:
   a. Ductile iron pipe shall conform to AWWA C 151, thickness class 50, except where otherwise specified, and the exterior shall be coated with coal tar varnish. Pipe shall be cement mortar lined to a minimum thickness of 2/32 inch for 3 inch through 12" pipe, and in all sizes conform to AWWA C 104. The cement shall conform to ASTM C 150.
   b. Joints shall be Tyton push-on joints, or approved equal, or mechanical joint type per AWWA C lll except where flanged joints are required to connect to valves or other equipment.
   c. Bolts and nuts for flanges located outdoors above ground or in open vaults in structures shall be Type 316 stainless steel conforming to ASTM A 193, Grade B8M for bolts, and ASTM A 194, Grade 8M for nuts. Bolts and nuts larger than one and one-quarter (11/4) inches shall be steel, ASTM A 307, Grade B, with cadmium plating, ASTM A 165, Type NS.
   d. Bolts used in flange installation sets shall conform to ASTM B 193, Grade B7. Nuts shall comply with ASTM A 194, Grade 2H.
   e. Ductile iron pipe and fittings shall be encased in polyethylene film with a minimum thickness of 8 mil. Film shall meet and be installed in accordance with AWWA C105.
   f. Metallic detectable marking tape shall be used on all mains, services, and blow-offs (see meter specifications for details).

7. Section 7-12.2 of the Standard Specifications shall be supplemented by the following:
   a. Gate valves shall be used for twelve (12) inch mains and smaller. Butterfly valves shall be used for mains greater than twelve (12) inches.
      i. Gate Valves: Gate valves shall conform to the latest revision AWWA C509 or C515 for cold water, resilient wedge, 200 psi minimum working pressure. They shall be D.I. or iron bodied, bronze-mounted, non rising stem, counter clockwise opening, mechanical joint and/or flanged ends (except 6 inch valves on fire hydrant lines which shall be mechanical joint by flanged). Valve stems shall be provided with O-ring seals and shall be as manufactured by the Mueller Company or approved equal. Operator shall have standard AWWA two inch (2") square nut.
      ii. Butterfly Valves: Butterfly valves shall be HP 250 as manufactured by Pratt or approved equal. Butterfly valves shall meet or exceed AWWA C504, and shall have a 250 psi minimum working pressure rating and shall open counter clockwise. Operator shall have standard AWWA two inch (2") square nut. Butterfly Valves shall have mechanical joint and/or flanged ends.
      iii. Backfill & Bedding: Pipes will be bedded in 6" of sand minimum. Pipe shall be backfilled with sand to the top of the pipe and be compacted to 90 percent of maximum dry density. Conditions may dictate use of other backfill or bedding material, use of other material requires prior approval of City Engineer.
      iv. Water Line Separation From Sewer: A minimum horizontal separation of ten feet between gravity sanitary sewers and any existing potable water lines shall be maintained, measured edge to edge. When crossing over sewer lines a minimum of 3' vertical separation shall be maintained.
      v. Thrust control shall be by means of concrete thrust block or megaIug connectors.

8. When installing, extending, or replacing a water main; Line valves shall be installed no further apart than 600 feet. Valves shall also be required where mains intersect on the following minimum basis:
   -Teed lines - 3 valves minimum
   -Crossed lines - 4 valves minimum
   Valve arrangement shall be determined by City Water Department.

9. Hydrant, fire line, and service connections need not have more than one valve, unless specified otherwise by the City Water Department or these specifications.

10. All materials and fittings shall be as specified or an approved equal.

Approved: 12/3/2012 City Engineer Date	City of Fife	Dwg No: **W6**
WATER STANDARD DETAIL		**WATER VALVES**

10. All materials and fittings shall be as specified or an approved equal.

11. Tapping sleeves, when allowed by city, shall be Smith and Blair #622 or approved equal, with epoxy coating and stainless steel bolts and nuts for corrosive environments.

12. All materials and fittings shall be new and unused.

13. Fire lines shall have a valve at the main. Fire line valve boxes shall have a locking valve box lid, manufactured by Ampro, which utilizes a "red" pentagonal nut for the locking mechanism designed for the Vanrich 940 valve box.

14. Water mains shall have a minimum horizontal separation of 3' and vertical separation of 6" from other utilities, measured edge to edge, unless prior written approval is received from the city. Exception: see note #7A.4 above regarding sanitary sewer.

15. Water mains installed in casings require the casing be a minimum of (6") six inches larger than the outside diameter of the bells on the Ductile Iron Pipe. Chokes or skids shall be strapped to the Ductile Iron Pipe at regular intervals sufficient enough to evenly support the water main and keep it centered in the casing. Very long crossings may require the space between the main and casing be partially filled with sand, to prevent movement of the pipe. An isolation valve on the main shall normally be required at each end of the casing.

16. The standard location for water mains shall be within public streets and roads and shall be a standard distance (see chart below) from the center line of such streets and roads on the south and east side of street center lines. Exceptions to these requirements may be made in order to avoid cutting and replacing pavement or to avoid conflicts with other existing underground facilities, as determined by the City Engineer. As nearly as practical, mains shall be installed in the same relative location on a particular street with the distance from the center line of the street being varied as little as possible. Mains shall not be installed in alleys. The installation of mains within easements across privately owned property is to be done only when absolutely necessary, such as the avoidance of dead end conditions. Such easements, when required, shall be a minimum of 15 feet in width centered upon the main, and the conditions of the easement shall include provisions that the property included in the easement shall not be used for any purpose which would interfere with the unrestricted use for water main purposes. Under no circumstances will permission for the construction of a building or structure of any type within the easement be granted.

Water Main Locations
2 Lane Road . . . . . 8 Feet From Center Line
3 Lane Road . . . . . 14 Feet From Center Line
4 Lane Road . . . . . 20 Feet From Center Line
5 Lane Road . . . . . 26 Feet From Center Line

17. Distribution system mains shall be looped wherever possible. The installation of permanent dead-end mains and dependence of relatively large areas on single mains is to be avoided. Water mains shall be sized so as not to permit pipe line water velocity to exceed (9) nine feet per second during peak hour use while meeting fire flow demand, under those conditions water pressure must remain at or above 20 psi.

18. Hazardous water line crossings shall be valved on each side. These crossings include, but are not limited to: creeks, rivers, railroads, freeways, major highways, etc.

19. Water mains shall have a uniform 36" of cover, unless prior written approval from the City Engineer is granted.

20. The installation of an appropriately designed flexible expansion joint, shall be required at points in the water system (determined by the City Engineer) determined to be either critical to the integrity, or at high risk of failure when exposed to sudden or gradual motion. Flexible expansion joints shall be Flex-Tend as manufactured by EBAA Iron Inc., or approved equal.

21. It shall be the responsibility of the developer to provide the City with accurate as-built construction plans, upon the completion of the project and prior to issuance of any certificate of occupancy. As-built plans submitted to the city for review and acceptance shall include one set of mylars, two sets of blue line plans, and on CD-Rom in both PDF and CAD format. Mylars and blue line plans shall be 24" x 36" in dimension.

22. All mechanically restrained joints shall be shown on as-built plans.

23. Valve boxes located in landscaped areas shall have the same diameter concrete collar, however thickness shall be 6"of concrete. No asphalt shall be applied.

24. When water mains are required to cross private property an easement and bill of sale are required.

Approved: 11/20/2007 City Engineer Date WATER STANDARD DETAIL	City of Fife	Dwg No: W6 WATER VALVES

POLYETHYLENE ENCASEMENT

Effective, Economical Protection for Ductile Iron Pipe In Corrosive Environments

DIPRA

SHEET 1 OF 5

Approved: 11/20/2007 City Engineer Date	City of Fife	Dwg No: W7
WATER STANDARD DETAIL		POLYETHYLENE ENCASEMENT INSTALLATION INSTRUCTIONS

Proper Installation of Polyethylene Encasement

As with any corrosion-protection system, proper installation is important to polyethylene encasement's success. Care taken during installation is as important as the installation method itself. The few known failures of polyethylene-encased Gray and Ductile Iron pipe have generally been due to improper installation or poor workmanship.

The ANSI/AWWA C105/A21.5 Standard outlines three methods of installing polyethylene sleeving. Methods A and B use polyethylene tubes, and Method C uses polyethylene sheets.

Method A uses one length of polyethylene tube, overlapped at the joints, for each length of pipe. Because installation is faster and easier, most utilities and contractors choose some form of Method A.

Method B uses a length of polyethylene tube for the barrel of the pipe and a separate length of polyethylene tube or sheet for the joints. *The national standard does not recommend Method B for bolted-type joints unless an additional layer of polyethylene is provided over the joint area as in Methods A and C.*

In Method C, each section of pipe is completely wrapped with a flat polyethylene sheet.

ANSI/AWWA C105/A21.5 Installation Methods

Method A

In this method, which is preferred by most utilities and contractors, one length of polyethylene tube, overlapped at the joints, is used for each length of pipe.

Method B

A length of polyethylene tube is used for the barrel of the pipe and separate lengths of polyethylene tube or sheets are used for the joints. Note: Method B is not recommended for bolted-type joints unless an additional layer of polyethylene is provided over the joint area as in Methods A and C.

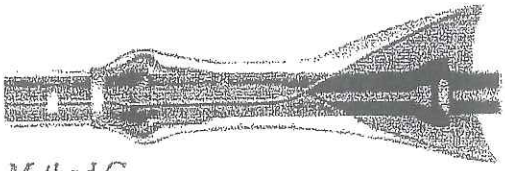

Method C

Each section of pipe is completely wrapped with a flat polyethylene sheet.

SHEET 2 OF 5

Approved: 11/20/2007 City Engineer Date	City of Fife	Dwg No: W7
WATER STANDARD DETAIL		POLYETHYLENE ENCASEMENT INSTALLATION INSTRUCTIONS

Method A
for Normal Dry Trench Conditions

Step 1.
Cut a section of polyethylene tube approximately two feet longer than the pipe section. Remove all lumps of clay, mud, cinders, or other material that might have accumulated on the pipe surface during storage. Slip the polyethylene tube around the pipe, starting at the spigot end. Bunch the tube accordion-fashion on the end of the pipe. Pull back the overhanging end of the tube until it clears the pipe end.

Step 2.
Dig a shallow bell hole in the trench bottom at the joint location to facilitate installation of the polyethylene tube. Lower the pipe into the trench and make up the pipe joint with the preceding section of pipe.

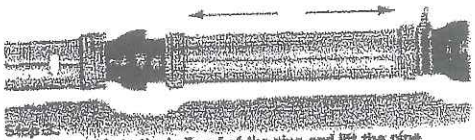

Step 3.
Move the cable to the bell end of the pipe and lift the pipe slightly to provide enough clearance to easily slide the tube. Spread the tube over the entire barrel of the pipe. Note: Make sure that no dirt or other bedding material becomes trapped between the wrap and the pipe.

Step 4.
Make the overlap of the polyethylene tube by pulling back the bunched polyethylene from the preceding length of pipe and securing it in place. Note: The polyethylene may be secured in place by using tape, string, plastic tie straps, or any other material capable of holding the polyethylene encasement snugly against the pipe.

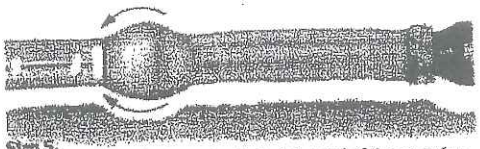

Step 5.
Overlap the secured tube end with the tube end of the new pipe section. Secure the new tube end in place.

Step 6.
Take up slack in the tube along the barrel of the pipe to make a snug, but not tight, fit. Fold excess polyethylene back over the top of the pipe.

Step 7.
Secure the fold at several locations along the pipe barrel (approximately every three feet).

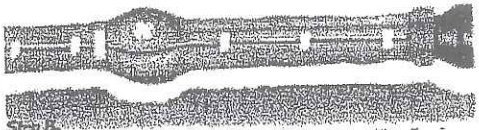

Step 8.
Repair all small rips, tears, or other tube damage with adhesive tape. If the polyethylene is badly damaged, repair the damaged area with a sheet of polyethylene and seal the edges of the repair with adhesive tape.

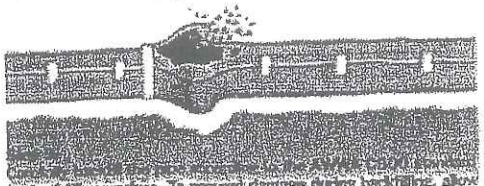

Step 9.
Use the proper procedure for backfill procedure. To prevent damage during backfilling, allow adequate slack in the tube at the joint. Backfill should be free of cinders, rocks, boulders, nails, sticks, or other materials that might damage the polyethylene. Avoid damaging the polyethylene when using tamping devices.

SHEET 3 OF 5

Approved: 11/20/2007 City Engineer Date WATER STANDARD DETAIL	City of Fife	Dwg No: W7 POLYETHYLENE ENCASEMENT INSTALLATION INSTRUCTIONS

Alternate Method A for Wet Trench Conditions

In wet, sloppy trench conditions, the pipe should be completely covered by the polyethylene tube before it is lowered into the trench. This alternate method is illustrated below.

Step 1.
Cut the polyethylene tube to a length approximately two feet longer than that of the pipe section. Slip the tube over the pipe.

Step 2.
Spread the tube over the entire barrel of the pipe, pushing back both ends of the tube until they clear both pipe ends. Make sure the tube is centered on the pipe to provide a one-foot overlap at each end.

Step 3.
Take up slack in the tube to make a snug, but not tight, fit. (See previous page.) Circumferential wraps of tape or plastic tie straps should be placed at 2-foot intervals along the barrel of the pipe to help minimize the space between the polyethylene and the pipe. Wrap a piece of tape or plastic tie strap completely around the pipe at each end to seal the polyethylene, leaving ends free to overlap the adjoining sections of pipe.

Step 4.
Lower pipe into the trench and make up the pipe joint. Be careful not to damage the polyethylene when handling or jointing the pipe. Complete the installation following dry condition Steps 4, 5 (taking care to seal ends of overlap by wrapping tape or plastic tie straps completely around the pipe at each end), 8, and 9 on previous page. *Note: When lifting polyethylene-encased pipe, use a fabric-type sling or a suitably padded cable or chain to prevent damage to the polyethylene.*

If you have any problems or questions about installing polyethylene encasement, contact DIPRA or one of its member companies.

Appurtenances

Pipe-shaped appurtenances
Cover heads, reducers, offsets, and other pipe-shaped appurtenances in the same manner as the pipe.

Odd-shaped appurtenances
Wrap odd-shaped appurtenances such as valves, tees, and crosses with a flat sheet or split length of polyethylene tube by passing the sheet under and then over the appurtenance and bringing it together around the body of the appurtenance. Make seams by bringing the edges of the polyethylene together, folding over twice, and taping them down.

Joints
Overlap joints as in normal installation; then tape the polyethylene securely in place at valve stems and other penetrations. When bolted-type joints are used, care should always be taken to prevent bolts or other sharp edges of the joint configuration from penetrating the wrap.

Branches, blowoffs, air valves
To provide openings for branches, blowoffs, air valves, and similar appurtenances, make an X-shaped cut in the polyethylene and temporarily fold back the film. After installing the appurtenance, tape the slack securely to the appurtenance and repair the cut and any other damaged areas in the polyethylene with tape.

Service taps
The preferred method of tapping polyethylene-encased Ductile Iron pipe involves wrapping two or three layers of polyethylene adhesive tape completely around the pipe to cover the area where the tapping machine and chain will be mounted. Then install the corporation stop directly through the tape and polyethylene. After the tap is made, inspect the entire circumferential area for damage and make any necessary repairs.

SHEET 4 OF 5

Approved: 11/20/07 City Engineer Date WATER STANDARD DETAIL	City of Fife	Dwg No: W7 POLYETHYLENE ENCASEMENT INSTALLATION INSTRUCTIONS

POLYETHYLENE ENCASEMENT is inexpensive, easy to install on-site, and requires no additional manpower or equipment. And since it is a passive method of protecting Ductile Iron pipe in corrosive soils, it does not require the continual monitoring, maintenance, or supervision by trained personnel necessary with cathodic protection systems.

Although the polyethylene encasement should prevent contact between the pipe and surrounding backfill and bedding material, it is not intended to be completely airtight or water tight. All lumps of clay, mud, cinders, or other materials that might be on the pipe surface should be removed prior to installation of the polyethylene encasement. Care should be taken to prevent soil or bedding material from becoming trapped between the pipe and the polyethylene.

The polyethylene film should be fitted to the contour of the pipe to effect a snug, but not tight, encasement with minimum space between the polyethylene and the pipe. Sufficient slack should be provided in contouring to prevent stretching the polyethylene when bridging irregular surfaces, such as bell-spigot interfaces, bolted joints, or fittings, and to prevent damage to the polyethylene during backfilling operations. Overlaps and ends should be secured with polyethylenecompatible adhesive tape or recommended strapping.

For installation below the water table or in areas subject to tidal actions, it is recommended that both ends of the polyethylene tube be sealed as thoroughly as possible by wrapping circumferentially with polyethylene-compatible adhesive tape or recommended strapping at each joint overlap.

As with all protection methods, proper installation is vital to the success of polyethylene encasement. The actual installation sequence, however is less important than the quality and care taken during installation.

Approved: 1/24/2007 City Engineer Date WATER STANDARD DETAIL	City of Fife	Dwg No: W7 POLYETHYLENE ENCASEMENT INSTALLATION PROCEDURES

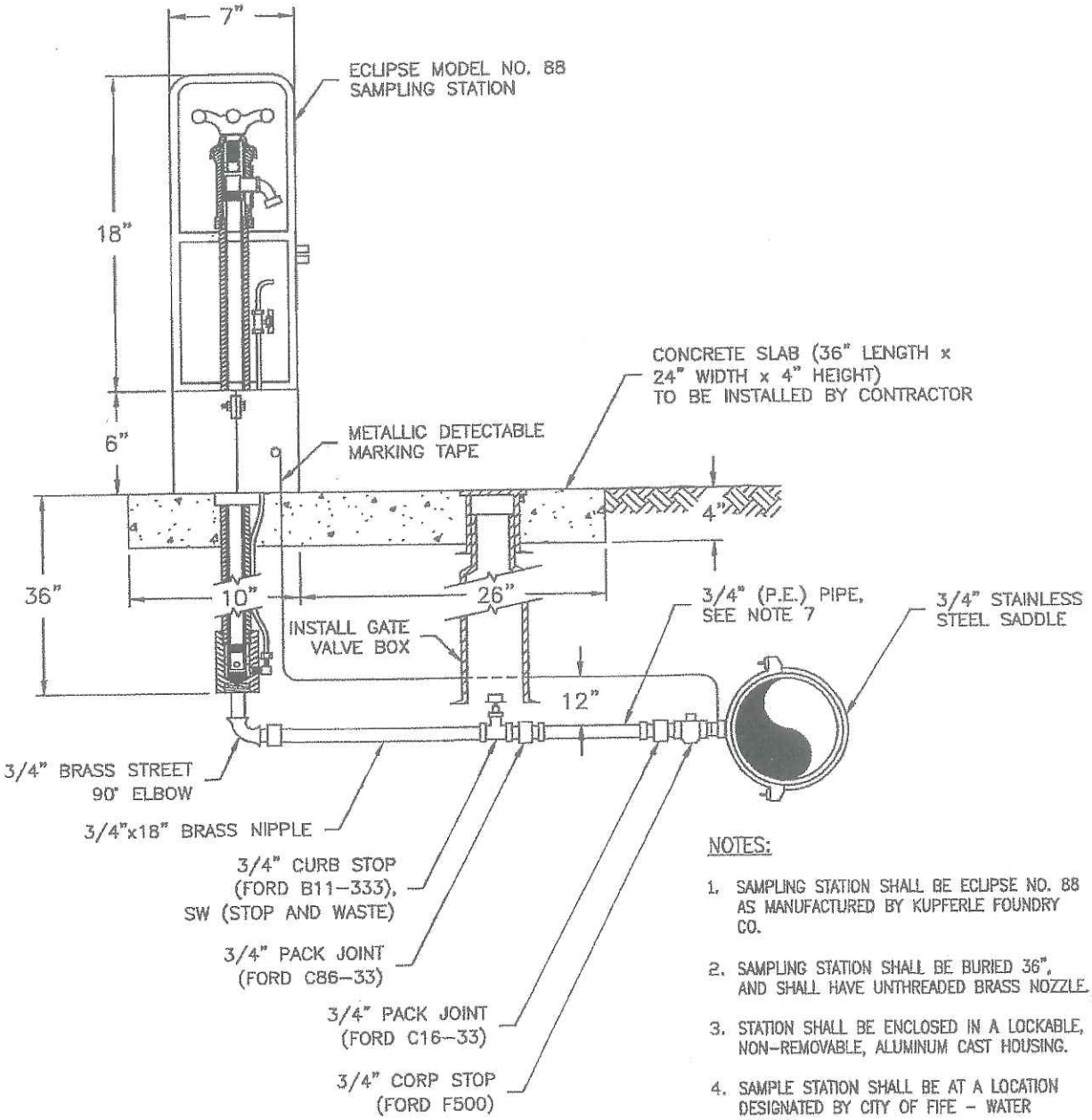

NOTES:

1. SAMPLING STATION SHALL BE ECLIPSE NO. 88 AS MANUFACTURED BY KUPFERLE FOUNDRY CO.
2. SAMPLING STATION SHALL BE BURIED 36", AND SHALL HAVE UNTHREADED BRASS NOZZLE.
3. STATION SHALL BE ENCLOSED IN A LOCKABLE, NON-REMOVABLE, ALUMINUM CAST HOUSING.
4. SAMPLE STATION SHALL BE AT A LOCATION DESIGNATED BY CITY OF FIFE - WATER DIVISION.
5. ALL PACK JOINTS SHALL USE PIPE INSERT STIFFNERS.
6. ALL MATERIALS SHALL BE AS SPECIFIED OR EQUAL APPROVED BY THE CITY.
7. 3/4" (P.E.) PIPE SHALL BE 200 PSI AND SHALL MEET ASTM 1248 AND 2239, SIDR 7. I.D. IS IRON PIPE SIZE.

Approved: 11/20/2007 City Engineer Date	City of Fife	Dwg No: W17
WATER STANDARD DETAIL		SAMPLING STATION

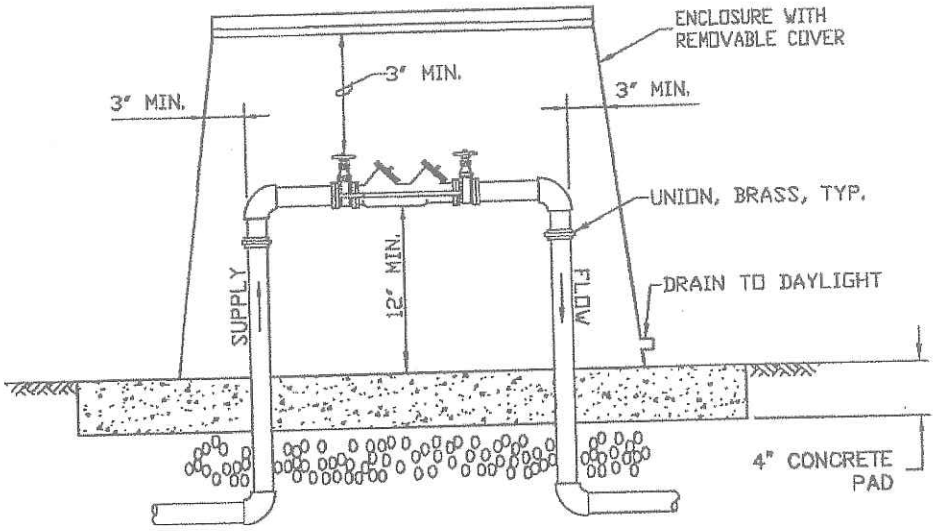

NOTES:

1. RPBA MUST BE ON MOST RECENT EDITION OF "BACKFLOW PREVENTION ASSEMBLIES APPROVED FOR INSTALLATION IN WASHINGTON STATE" AS PUBLISHED BY THE WASHINGTON STATE DEPT. OF HEALTH (DOH).
2. ALL BACKFLOW PREVENTERS SHALL BE INSTALLED IN THE ORIENTATION FOR WHICH THEY ARE APPROVED BY DOH.
3. RPBA'S SHALL NOT BE INSTALLED IN A LOCATION SUBJECT TO FLOODING.
4. THE RELIEF VALVE PORT SHALL NOT BE EXTENDED OR PLUGGED.
5. IT IS THE PROPERTY OWNER/OCCUPANTS RESPONSIBILITY TO PROTECT BACKFLOW PREVENTERS FROM FREEZING, VANDALISM, AND FIRE HAZARDS.
6. RPBA'S INSTALLED IN AN ENCLOSURE SHALL HAVE A DAYLIGHT DRAIN INSTALLED AT THE ENCLOSURES BASE CAPABLE OF CARRYING AWAY THE FULL DISCHARGE FLOW OF THE RELIEF VALVE WHEN VENTING.
7. ALL RPBA'S SHALL HAVE A MINIMUM 12" OF CLEARANCE BETWEEN THE BOTTOM OF THE RELIEF PORT AND THE GROUND LEVEL; IT SHALL ALSO HAVE A MINIMUM OF 3" OF CLEARANCE IN ALL OTHER DIRECTIONS, UNLESS GREATER CLEARANCE IS NECESSARY FOR TESTING AND MAINTENANCE.
8. THE MAXIMUM HEIGHT OF INSTALLATION SHALL NOT EXCEED 5' FOR ASSEMBLIES UNLESS THERE IS A PERMANENTLY INSTALLED PLATFORM MEETING OSHA STANDARDS TO FACILITATE SERVICING THE ASSEMBLY.
9. RPBA'S INSTALLED FOR THE PURPOUSE OF PREMISE ISOLATION SHALL BE INSTALLED IMMEDIATELY AFTER THE METER.
10. TEST COCKS SHALL HAVE BRASS OR PLASTIC PLUGS INSTALLED IN THEM TO PREVENT DEBRIS FROM ENTERING.

Approved: 11/20/2007 City Engineer Date WATER STANDARD DETAIL	City of Fife	Dwg No: W18 RPBA ASSEMBLY 2" AND SMALLER

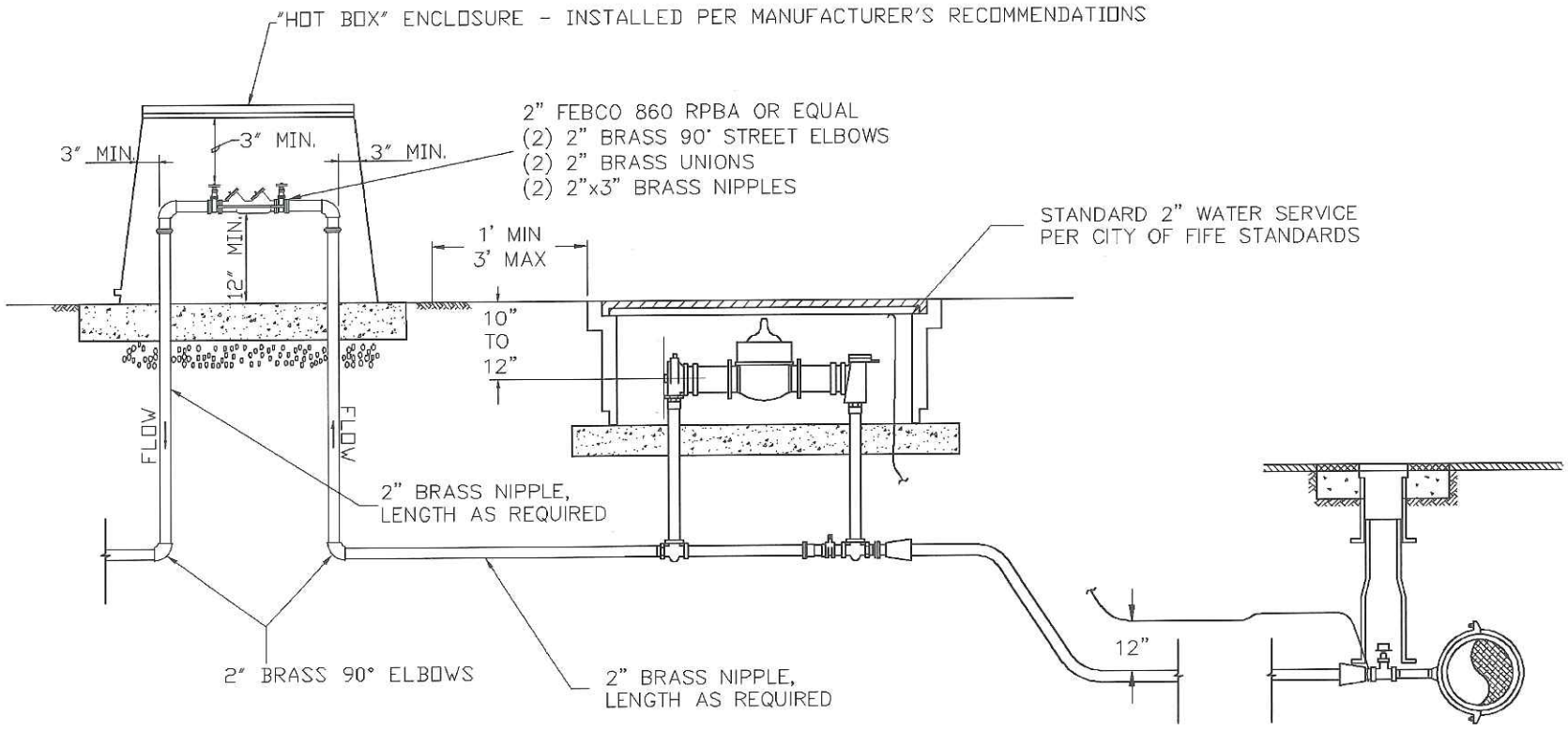

1. ALL BRASS PIPE AND FITTINGS DOWNSTREAM OF METER SETTER MAY BE SUBSTITUTED WITH COPPER EQUIVALENTS.
2. INSTALLATIONS SMALLER THAN 2" SHALL USE SIMILAR DESIGN, WITH APPROPRIATE ADJUSTMENTS IN SIZE OF MATERIALS AND ENCLOSURES.
3. THE 3' MAX. DISTANCE BETWEEN THE METER BOX AND THE HOT BOX ENCLOSURE MAY BE EXCEEDED WITH THE PRIOR WRITTEN APPROVAL OF THE WATER DIVISION.
4. THERE SHALL NOT BE ANY POINTS OF CONNECTION PERMITTED BETWEEN THE WATER METER AND THE RPBA.

Approved: 12/5/2012
City Engineer Date

WATER STANDARD DETAIL

City of Fife

Dwg No: W18

RPBA ASSEMBLY
2" AND SMALLER