City of Fife

BID PROPOSAL, CONTRACT DOCUMENTS AND TECHNICAL SPECIFICATIONS FOR:

70th Avenue Signal Modifications

Project No. FIF 515.108

Summer 2016

City of Fife 5411 23rd Street East Fife, WA 98424 Phone: (253) 922-9315 Contact: Mr. Ken Gill, P.E.	RH2 Engineering, Inc. 300 Simon Street SE, Suite 5 East Wenatchee, WA 98802 Phone: (425) 951-5428 Contact: Mr. Erik Howe P.E.

City of Fife

BID PROPOSAL, CONTRACT DOCUMENTS AND TECHNICAL SPECIFICATIONS FOR:

70th Avenue Signal Modifications

Project No. FIF 515.108

Summer 2016

THE CONTENT OF THIS DOCUMENT, AS A MEANS OF PROFESSIONAL SERVICE, IS PROTECTED BY 17 U.S.C. § 101, ET SEQ. AS SUCH, IT SHALL NOT BE USED, IN WHOLE OR IN PART, FOR ANY OTHER PROJECT OR PURPOSE WITHOUT WRITTEN AUTHORIZATION FROM RH2 ENGINEERING. © 2016 RH2 ENGINEERING, INC.

Signed: 9/15/2016

Signed: 9/15/2016

INVITATION FOR BIDS
SMALL WORKS ROSTER

Notice is hereby given that sealed bids will be received by The City of Fife at City Hall up to the hour of **11:00 A.M. on October 7, 2016** for the City of Fife **70th Avenue Signal Modifications Project** and will then be opened and publicly read. City Hall is located at **5411 23rd Street East, Fife, Washington**. Proposals received after **11:00 A.M. on October 7, 2016** will not be considered.

Improvements to be included within this Project are as follows:

Signal improvements at 70th Street and 26th Street including conduit, conductors, vehicle and pedestrian displays, cabinet, controller, striping, and signing. All work shall be in accordance with the Contract Documents, City of Fife Standards, and WSDOT 2016 Standard Specifications.

Pierce County prevailing wage requirements are in effect.

The City of Fife is an Affirmative Action/Equal Opportunity Employer and hereby notifies all Bidders that it will affirmatively ensure that in any Contract entered into pursuant to this advertisement disadvantaged business enterprises will be given the full opportunity to submit Bids in response to this invitation. Minority and/or Women Owned Businesses are encouraged to submit bids and all bidders are encouraged to consider minority and women owned businesses as potential subcontractors and material suppliers for this project. The City of Fife does not discriminate on the basis of race, color, national origin, sex, religion, age, or disability in employment or the provisions of services.

Free-of-charge access to project bid documents (plans, specifications, addenda, and Bidders List) is provided to Prime Bidders, Subcontractors, and Vendors by going to Builders Exchange at www.bxwa.com and clicking on "Posted Projects", "Public Works", and "City of Fife". This online plan room provides Bidders with fully usable online documents with the ability to: download, view, print, order full/partial plan sets from numerous reprographic sources, and a free online digitizer/take-off tool. It is recommended that Bidders "Register" in order to receive automatic e-mail notification of future addenda and to place themselves on the "Self-Registered Bidders List". Bidders that do not register will not be automatically notified of addenda and will need to periodically check the online plan room for addenda issued on this project. Contact Builders Exchange of Washington at 425.258.1303 should you require assistance with access or registration.

The plans are also available on the City of Fife website.

The contact is **Ken Gill, (253) 922-9315 or email at KGill@cityoffife.org**.

All bids shall be submitted on the prescribed Bid Forms and in the manner as stated in this invitation and in the Bid Document and said bids shall be accompanied by a bid deposit in the form of cash, cashier's check, certified check, postal money order, or a surety bond to the City of Fife in the amount of five percent (5%) of the total amount of the bid for Schedule A. **Bid Bonds submitted on other than the bond form provided by the City may be subject to rejection. Faxed bids and/or surety bond will not be accepted.**

Bids must be submitted in a sealed envelope with the outside clearly marked "sealed bid" with the bid opening date and time, and the project name as it appears in this invitation and the name and address of the bidder. Bids shall be addressed to the **City Clerk, City of Fife-5411 23rd Street, Fife, WA 98424**.

The City of Fife reserves the right to reject any or all bids and to waive irregularities in the bid or in the bidding.

No Bidder may withdraw his proposal after **11:00 A.M. on October 7, 2016**, or before award of Contract, unless said award is delayed for a period exceeding sixty (60) days.

Liquidated Damages: The Project must be physically completed within 40 working days. Liquidated damages of $1000.00 will be assesssed for each calendar day of delay in completion of the Project.

Published: *Tacoma News Tribune*

Publish Date: September 23, 2016 and September 30, 2016

BID FORMS

INSTRUCTION TO BIDDERS

I. Execution of Contract

A. Execution of Contract:

1. Within 10 days after the date the lowest qualified Bidder receives notification of award, the lowest qualified Bidder shall execute and return the Contract and the required number of copies and shall furnish a performance and payment bond and insurance.

2. At the time the Contract is executed and returned, the Contractor shall notify the City in writing of the names of all subcontractors and materials suppliers the Contractor intends to use for the work.

B. Performance Bond/Payment Bond:

1. To be furnished at the time of delivery of the executed Contract.

2. To be in full amount of Contract price.

3. The surety must be authorized to do business in the State of Washington and be satisfactory to the City. Each bond must be approved in writing by the City Attorney.

C. Contract Insurance:

1. Work under the Contract shall not commence until the City has approved the Contractor's insurance. No subcontractors shall commence work until the City has approved subcontractor's insurance. Insurance shall be as required per Section 1-07.18, of the Special Provisions.

2. The Contractor and subcontractors shall obtain and maintain Workman's Compensation Insurance during the life of this Contract.

3. 3. Contractor specifically waives its immunity under Title 51 of the Revised Code of Industrial Insurance Act for injuries to its employees, and indemnifies the City from liability for the action brought by those employees.

II. Legal Wages on Public Works

A. Statement of Intent to Pay Prevailing Wages:

1. The Contractor shall submit a Statement for the Contractor and each and every subcontractor to the Industrial Statistician of the Department of Labor and

Industries for approval. A $40.00 fee payable to the Department of Labor and Industries shall be included for each statement submitted. Should force account work be authorized by the City, the Contractor shall, at his/her own expense, provide the City with a new statement of Intent to Pay Prevailing Wages if any changes have occurred since the issuance of the original Intent to Pay Prevailing Wages was filed.

2. For contracts in excess of $10,000, the Contractor shall post in a location readily visible to workers at the job site:

    a) A copy of the approved statement of Intent to Pay Prevailing Wages (Labor and Industries [L & I] Form F700-029-000).

    b) The address and telephone number of the Industrial Statistician of the Department of Labor and Industries.

3. The statement of Intent to Pay Prevailing Wages shall include the Contractor's registration certificate number or UBI number and prevailing rate of wage for each classification of workers entitled to prevailing wages. Self-employed or owner/operator contractors or subcontractors who perform the actual work will be required to submit a statement regardless of the method of payment.

B. Affidavit of Wages Paid: Following final acceptance of the Project, the Contractor shall submit, for the Contractor and each and every subcontractor, an Affidavit of Wages Paid (L & I Form F700-007-000) form to the Industrial Statistician of the Department of Labor and Industries for approval. A $40.00 fee payable to the Department of Labor and Industries shall be included for each statement submitted. Self-employed or owner/operator contractors or subcontractors who perform the actual work will be required to submit an affidavit regardless of the method of payment.

BIDDER'S CHECKLIST

The following forms and information must be turned in at the time of the Bid opening:

1. Proposal, certify receipt of addenda (if any) in the space provided in the second paragraph
2. Schedule of Prices
3. Non-collusion Certificate, notary required
4. Certificate as to Corporate Principal, notary required
5. Bid Bond Form, attach Power of Attorney

PROPOSAL

City of Fife -Project: **70th Avenue Signal Modifications**
5411 23rd Street E
Fife, Washington 98424 Date: _____

Total Bid Amount Including Tax: $_____

Written in words: _____

The undersigned, as Bidder, declare that we have personally examined the Project site in the City of Fife, and all of the plans, specifications, and Contract Documents herein contained, and that we will contract with the City of Fife on the form of agreement provided herewith to do everything necessary to perform and complete construction called for in the Contract for the construction of the Project listed above, at the price and on the terms and conditions herein contained in the Contract Documents. Total price for the Contract has been written in words followed by numbers in parentheses.

We agree that the following shall form a part of this proposal: Proposed Subcontractors, Non-Collusion Certificate, and Certificate as to Corporate Principal. We acknowledge that addenda numbers ___ to ___ have been delivered to us and have been examined as part of the Contract Documents.

Attached is a proposal guaranty bond duly completed by a guaranty company authorized to carry on business in the state of Washington in the amount of at least five percent (5%) of the total amount of our proposal.

If our proposal is accepted, we agree to sign the Contract and to furnish the performance bond and the required evidence of insurance within ten (10) calendar days after receiving written notice of the award of the Contract. We acknowledge that the City of Fife may forfeit our bid deposit as liquidated damages in the event of our noncompliance with the requirements of this paragraph.

The Bidder agrees to prosecute the work in accordance with this Document and the Contract Documents. Bidder further agrees to complete the Project within the allotted time as specified in the Contract.

The Bidder understands that the Owner reserves the right to reject any and all proposals, as well as increase or decrease the scope of work, in accordance with Section 1-04.4 of the 2016 WSDOT/APWA Standard Specifications for Road, Bridge, and Municipal Construction.

_____	_____
Bidder	Telephone
_____	_____
By Authorized Official	
_____	_____
Date	
_____	_____
Contractor's Registration No.	Business Address

All blank lines must be filled in to constitute a completed Bid Form.

Schedule of Prices

Item	Description	Units	Quantity	Unit Price	Total Price
1.	MOBILIZATION	LS	1	=$_____	=$_____
2.	REMOVAL OF STRUCTURES AND OBSTRUCTION	LS	1	=$_____	=$_____
3.	EROSION/WATER POLLUTION CONTROL	LS	1	=$_____	=$_____
4.	PAINT LINE	LF	692	=$_____	=$_____
5.	PLASTIC TRAFFIC ARROW	EA	8	=$_____	=$_____
6.	PLASTIC STOP LINE	LF	171	=$_____	=$_____
7.	PLASTIC WIDE LANE LINE	LF	200	=$_____	=$_____
8.	PROJECT TEMPORARY TRAFFIC CONTROL	LS	1	=$_____	=$_____
9.	PERMANENT SIGNING	LS	1	=$_____	=$_____
10.	TRAFFIC SIGNAL SYSTEM	LS	1	=$_____	=$_____
11.	ROADWAY SURVEYING	LS	1	=$_____	=$_____
12.	SHORING OR EXTRA EXCAVATION CLASS B	LS	1	=$_____	=$_____

13.	UNKNOWN UTILITY REPAIR	DOL	10000	=$_____1_____	=$_____10,000_____
14.	ROADSIDE CLEANUP	DOL	5000	=$_____1_____	=$_____5,000_____
15.	SPCC PLAN	LS	1	=$_____	=$_____
SUBTOTAL					= $_____
SALES TAX (SEE SPECIFICATION SECTION 1-07.2(1))					= $_____0.00_____
TOTAL BID					= $_____

CITY OF FIFE
NON-COLLUSION CERTIFICATE

STATE OF WASHINGTON)
)ss
COUNTY OF PIERCE)

The undersigned, being duly sworn, deposes and says that the person, firm, association, co-partnership or corporation herein named, has not, either directly or indirectly, entered into any agreement, participated in any collusion, or otherwise taken any action in restraint of free competitive bidding in the preparation and submission of a proposal to the City of Fife for consideration in the award of a Contract on the improvement described as follows:

70th Avenue Signal Modifications Project

_____
Name of Firm

_____
Title

_____
Signature of Authorized Member

Sworn before me this

_____ day of _____, _____.

_____
(Notary Public) (Corporate Seal)

My commission expires _____, _____.

CERTIFICATE AS TO CORPORATE PRINCIPAL

I, _____, certify that I am the _____ of the corporation named as

Contractor in Agreement attached hereto; that _____ who signed said Agreement

on behalf of the Contractor, was then _____ of said corporation; that said Agreement was duly signed for and in behalf of said corporation by authority of its governing body, and is within the scope of its corporate powers.

By: _____

Title: _____

State of: _____

County of: _____

being duly sworn deposes and says that he is _____ of _____.
(Name of Organization)

Subscribed and sworn before me this

_____ day of _____, _____.

_____
(Notary Public)

My commission expires: _____, _____.

BID BOND FORM

Herewith find deposit in the form of a certified check, cashier's check, cash or bid bond, in the amount of

_____($_____),
which is not less than five percent (5%) of the total bid.

Sign here _____

.....

BID BOND

KNOW ALL PEOPLE BY THESE PRESENTS:

That I/we, _____ as Principal,

and that I/we, _____ as Surety,
are held firmly bound unto the City of Fife, Washington, as Obligee, in the penal sum of

$_____($_____), for
the payment of which the Principal and the Surety bind themselves, their heirs, executors, administrators, successors, and assigns, jointly and severally, by these presents.

The condition of this obligation is such that if the Obligee shall make any award to the Principal for the **70th Avenue Signal Modifications** Project according to the terms of the proposal or bid made by the Principal thereto, and the Principal shall duly make and enter into a Contract with the Obligee in accordance with the terms of said proposal or bid and award and shall give bond for the faithful performance thereof, with Surety or Sureties approved by the Obligee; or if the Principal shall, in case of failure to do so, pay and forfeit to the Obligee the penal amount of the deposit specified in the call for bids, then this obligation shall be null and void; otherwise it shall be and remain in full force and effect and the Surety shall forthwith pay and forfeit to the Obligee, as penalty and liquidated damages, the amount of this bond.

Signed, sealed, and dated this _____ day of _____, _____.

_____
Principal

_____
Surety

Note: Power of Attorney shall be attached.

_____
Attorney in Fact

.....

Received return deposit in the sum of $_____ ($_____)

Bond No.: _____

The following forms have been provided for information, and are not required to be submitted with the bid

Contract Forms

CONTRACT

THIS Agreement, made effective as of the _____ day of _____, 2016, between

CITY OF FIFE, WASHINGTON ("**OWNER**")
5411 23rd Street East
Fife, WA 98424

Contact: Tel: Fax:

and

_____ ("**CONTRACTOR**")

Contact: Tel: Fax:

Tax Id No.:

for the following Project:

70th Avenue Signal Modifications project ("PROJECT")

The Owner and Contractor agree as follows:

1. Contract Documents. The Contractor shall complete the Project in accordance with the Contract Documents. The Contract Documents consist of the following in order of precedence:

a. Addenda
b. Contract Form
c. Proposal Form
d. Special Provisions
e. Contract Plans
f. Amendments to Standard Specifications
g. 2016 WSDOT Standard Specifications for Road, Bridge, and Municipal Construction, except Sections 1-04.2, 1-08.9, 1-08.10(1) – (4). 1-09.11, and 1-09.13
h. Contraction Agency's Standard Plans or Details (if any); and
i. WSDOT Standard Plans for Road, Bridge, and Municipal Construction.

The intent of the Contract Documents is to include all items necessary for the proper execution and completion of the Project by the Contractor. These Contract Documents complement each other in describing a complete work. Any requirement in one document binds as if stated in all. The Contractor shall provide any work or materials clearly implied in the Contract even if the Contract does not mention it specifically. If any part of the contract requires work that does not include a description of how the work will be performed, the work shall be performed in accordance with standard trade practices.

2. Date of Commencement and Physical Completion Date. The Contractor shall physically complete the Project within 40 working days from receipt of the Notice to Proceed.

3. Contract Sum. Subject to additions and deductions by change order, the contract sum is the bid amount of $_____, including applicable tax. The contract sum shall include all items and services necessary for the proper execution and completion of the Project.

4. Liquidated Damages. Timely performance and completion of the Project is essential to Owner and time limits are of the essence. In the event Contractor fails to physically complete the work in 40 working days, plus any authorized extensions thereof, the Contractor shall pay Owner liquidated damages of $1000.00 for each calendar day of delay in completion of the Project. No deduction or payment of liquidated damages will, in any degree, release the Contractor from further obligations and liabilities to complete the entire contract.

5. Changes. After execution of the Contract, changes in the Project may be accomplished by change order. Owner, without invalidating the Contract, may order changes in the Project within the general scope of the Contract consisting of additions, deletions or other revisions, the Contract Sum and Contract completion date being adjusted accordingly. Change orders shall be in writing signed by the parties.

6. Payment and Performance Bond. Contractor shall make, execute, and deliver a good and sufficient bond equal to the amount of the full contract price with a surety company as surety, conditioned that Contractor shall faithfully perform all the provisions of this contract and pay all laborers, mechanics, and subcontractors and material men and all persons who supply such person or persons, or subcontractors, with provisions and supplies for the carrying on of such work, in the form included in the bid documents. This bond shall be filed with the Owner. The surety must agree to be bound by the laws of the State of Washington and subject to the jurisdiction of the State of Washington.

7. Permits, Fees, Notices, and Compliance with Laws.

7.1 Unless otherwise provided in the Contract Documents, the Contractor shall secure and pay for all permits, fees, licenses and inspections by governmental agencies necessary for the proper execution and completion of the Work that are customarily secured after execution of the Contract and legally required at the time bids are received or negotiations concluded.

7.2 Contractor shall comply with and give notices required by applicable laws, statutes, ordinances, codes, rules, and regulations, and lawful orders of public authorities applicable to performance of the Work.

7.3 Contractor shall obtain a City of Fife business license pursuant to the provisions of Chapter 5.01 FMC prior to receipt of written Notice to Proceed.

8. Termination of Contract. This Contract may be terminated by Owner at any time upon the default of the Contractor or upon public convenience, in which Contractor shall be entitled to just and equitable compensation for any satisfactory work completed prior to the date of termination. Contractor shall not be entitled to any reallocation of cost, profit or overhead. Contractor shall not in any event be entitled to anticipated profit on work not performed because of such termination. Contractor shall use its best efforts to minimize the compensation payable under this Contract in the event of such termination. If the contract is terminated for default, the Contractor shall not be entitled to receive any further payments under the contract until all work called for has been fully performed. Any extra cost or damage to Owner resulting from such default(s) shall be deducted from any money due or coming due to the Contractor. The Contractor shall bear any extra expenses incurred by Owner in completing the work, including all increased costs for completing the work, and all damage sustained, or which may be sustained by Owner by reason of such default.

9. Warranty. Contractor warrants that: (1) materials and equipment furnished under the Contract will be new and of good quality unless otherwise required and permitted by the Contract Documents; (2) the Work will be free from defects not inherent in the quality required or permitted; and (3) the Work will conform to the

requirements of the Contract. The Contractor further agrees to correct any defects in materials, workmanship, or installation of the Work which shall develop or be discovered within one (1) year after final acceptance of the Work.

10. Indemnification/Hold Harmless. The Contractor shall defend, indemnify and hold Owner, its officers, officials, employees and volunteers harmless from any and all claims, injuries, damages, losses or suits including attorney fees, arising out of or in connection with the performance of this Agreement, except for injuries and damages caused by the sole negligence of Owner. Should a court of competent jurisdiction determine that this Agreement is subject to RCW 4.24.115, then, in the event of liability for damages arising out of bodily injury to persons or damages to property caused by or resulting from the concurrent negligence of the Contractor and Owner, its officers, officials, employees, and volunteers, the Contractor's liability hereunder shall be only to the extent of the Contractor's negligence. It is further specifically and expressly understood that the indemnification provided herein constitutes the Contractor's waiver of immunity under Industrial Insurance, Title 51 RCW, solely for the purposes of this indemnification. This waiver has been mutually negotiated by the parties. The provisions of this section shall survive the expiration or termination of this Agreement.

11. Independent Contractor. Contractor is and shall be at all times during the term of this Agreement an independent contractor.

12. Disputes. Any action for claims arising out of or relating to this Agreement shall be governed by the laws of the State of Washington. Venue shall be in Pierce County Superior Court.

13. Attorneys Fees. In any suit or action instituted to enforce any right granted in this Agreement, the substantially prevailing party shall be entitled to recover its costs, disbursements, and reasonable attorneys fees from the other party.

14. Extent of Agreement/Modification. This Agreement, together with attachments or addenda, represents the entire and integrated Agreement between the parties hereto and supersedes all prior negotiations, representations, or agreements, either written or oral. This Agreement may be amended, modified or added to only by written instrument properly signed by both parties.

OWNER:
CITY OF FIFE

By: _____
Subir Mukerjee, City Manager

Date: _____

CONTRACTOR:

By: _____

Name: _____

Title:_____

Date:_____

PERFORMANCE & PAYMENT BOND WITH GUARANTY

Name of Project: **70th Avenue Signal Modifications Project**

Contractor (Principal) _____

Project/Contract # _____

Surety _____

Bond Amount $_____

Bond # _____

1. Date and Parties

This performance and payment bond with guaranty is dated, for reference purposes only, the

_____day of _____, 20____ and is executed by _____

_____, as Principal(s), and

_____, as Surety.

2. General Recitals

A. Principal has entered into a public works contract (the "Contract") with the City of Fife for certain work described as follows:

70th Street Signal Improvement Project

(the "Work").

B. This bond is furnished in accordance with RCW 39.08 to secure faithful performance of the Contract and payment of all persons covered under RCW 39.08.010.

3. Bond Amount

The Principal and the Surety agree and do jointly and severally bind themselves, their heirs,

executors, administrators, and assigns, unto the City in the sum of _____

dollars ($_____).

4. Agreement to Perform

A. Principal, his or its heirs, executors, administrators, successors, or assigns, shall abide by, and well and truly keep and perform the covenants, conditions and agreements in the Contract, and shall faithfully perform all the provisions of the Contract and shall also well and truly perform and fulfill all the undertakings, covenants, terms, conditions and agreements of any and all duly authorized modifications of the Contract that may hereafter be made, at the time and in the manner therein specified.

B. Principal shall pay all laborers, mechanics, and subcontractors and material suppliers, and all persons who shall supply such person or persons, or subcontractors, with provisions and supplies for the carrying on of such Work.

C. The Principal further agrees to correct any defects in materials, workmanship, or installation of the Work which shall develop or be discovered within one (1) year after final acceptance of the Work.

5. Indemnity Agreement

A. The Principal hereby agrees to indemnify and hold the City harmless from any and all claims that may be made against the City resulting directly or indirectly from any action or inaction of the Principal or his agents, employees or independent contractors relating directly or indirectly to work performed or to be performed under the terms of this agreement. This indemnity and hold harmless shall include City Costs related to defending against said claims, or in enforcing the terms of this agreement.

B. For purposes of this document, the term "City Costs" shall mean all City expenditures, obligations or debt incurred, including, but not limited to: construction, labor, equipment and material costs; City staff time; legal consultant fees; engineering consultant fees; financial consultant fees; publication, service or process and filing fees; mailing fees; cost of right-of way, real property and easement acquisition; and fees and costs to other governmental jurisdictions, that are made or incurred by the City, whether or not legal action is commenced.

6. Obligation of Surety

A. If the Principal (or any of the employees, subcontractors, or lower tier subcontractors of the Principal) fails to abide by, and well and truly keep and perform the covenants, conditions and agreements in the Contract, or fails to faithfully perform any of the provisions of the Contract or fails to well and truly perform and fulfill any of the undertakings, covenants, terms, conditions and agreements of any and all duly authorized modifications of the Contract that may hereafter be made, at the time and in the manner therein specified, then the Surety shall be liable to the City for City Costs resulting from said failure to perform, but not to exceed the Bond amount.

B. If the Principal (or any subcontractors or lower tier subcontractors of the Principal) fails to pay any laborers, mechanics, or subcontractors or material suppliers, and all persons who shall supply such person or persons, or subcontractors, with provisions and supplies for the carrying on of such Work, then the Surety shall be liable to the City for City Costs resulting from such failure to pay and to the persons covered by RCW 39.08.010, but not to exceed the Bond amount.

C. If the Principal fails to correct any defects in materials, workmanship, or installation of the Work which shall develop or be discovered within one (1) year after final acceptance of the Work, then the Surety shall be liable to the City for City Costs resulting from such failure, but not to exceed one tenth of the Bond amount.

D. The Surety agrees that no change, extension of time, alteration or addition to the terms of the contract or to the Work to be performed thereunder or the specifications accompanying the same shall in any way affect its obligation on this Bond, and it does hereby waive notice of any change, extension of tie, alterations or additions to the terms of the Contract or the Work or to the specifications.

E. The Surety agrees that modifications and changes may be made in the terms and provisions of the Contract without notice to Surety, and any such modifications or changes increasing the total amount to be paid to the Principal shall automatically increase the obligation of the Surety on this Bond in a like amount. However, such increase shall not exceed twenty-five percent (25%) of the original amount of this Bond without the consent of the Surety.

7. Address for Notices

All notices required hereunder shall be considered properly delivered when personally delivered, when received by facsimile, or on the third day following mailing, postage prepaid, certified mail, return receipt requested, to:

Principal:	Surety:
_____	_____
Name	Name
_____	_____
Street address	Street address
_____	_____
City, State and zip code	City, state and zip code
_____	_____
Facsimile number	Facsimile number

8. Default

A. If the Principal (or any of the employees, subcontractors, or lower tier subcontractors of the Principal) fails to faithfully, fully, and timely perform the Contract or any amendments thereto as required hereunder, or fails to pay any laborers, mechanics, or subcontractors or material suppliers, or any persons who shall supply such person or persons, or subcontractors, with provisions and supplies for the carrying on of such Work, then the City shall notify the Principal and the Surety that such failures must be cured to the satisfaction of the City Public Works Department within seven days from the date of the Notice, or such longer time as may be determined by the City Public Works Director. If the failures are not so cured and approved within the period stated in the notice then the Surety, upon written demand by the City, shall immediately tender to the City the full amount of the Bond (less any amount previously paid to claimants in accordance with RCW 39.08) and the City will complete the Work and/or make the payments, as the case may be, deduct from the amount tendered the City Costs, and refund the remainder, if any, to the Surety.

B. If the Principal fails to correct any defects in materials, workmanship, or installation of the Work, as required hereunder, then the City shall notify the Principal and Surety that the Work must be corrected to the satisfaction of the City Public Works Department within seven days from the date of the Notice, or such longer time as may be determined by the City Public Works Director. If the Work is not corrected and approved within the period stated in the notice, then the Surety, upon written demand by the City, shall immediately tender to the City one tenth of the Bond amount (or the total amount remaining on the Bond whichever is less), and the City will correct the Work, and deduct from the amount tendered the City Costs. The City shall retain the remainder until the end of the warranty period. If at the end of the warranty period the tendered monies have not been expended for City Costs associated with correction of Work, then the remaining amount shall be refunded to the Surety.

C. If the amount of the Bond is inadequate to pay for City Costs, either because the City Costs exceed the Bond amounts or the Surety is no longer solvent or fails to timely tender the appropriate amount, then the City shall forthwith notify the Principal and he shall tender the deficiency to the City within five days of said notification. If the City commences legal action to collect said deficiency then the prevailing party in said legal action shall be entitled to judgment for their reasonable costs and attorney fees incurred therein. Each Principal is jointly and severally liable for the obligations set forth herein.

9. Action by Claimants.

A. All such persons mentioned in RCW 39.08.010 shall have a right of action in his, her, or their own name or names on the Bond for work done by such laborers or mechanics, and for materials furnished or provisions and goods supplied and furnished in the prosecution of the Work: PROVIDED, That such persons shall not have any right of action on this Bond for any sum whatever, unless within thirty days from and after the completion of the Contract with an acceptance of the Work by the City Council, the laborer, mechanic or subcontractor, or material supplier, or person claiming to have supplied materials, provisions or goods for the prosecution of such Work, shall present to and file with the City a notice in writing in accordance with RCW 39.08.030.

B. Every person, firm or corporation furnishing materials, supplies or provisions to be used in the construction, performance, carrying on, prosecution or doing of any of the Work, shall, not later than ten days after the date of the first delivery of such materials, supplies or provisions to any subcontractor or agent of any person, firm or corporation having a subcontract for the construction, performance, carrying on, prosecution or doing of such Work, deliver or mail to the Principal a notice in writing stating in substance and effect that such person, firm or corporation has commenced to deliver materials, supplies or provisions for use thereon, with the name of the subcontractor or agent ordering or to whom the same is furnished and that the Principal and the Bond will be held for the payment of the same, and no suit or action shall be maintained in any court against the Principal or this Bond to recover for such material, supplies or provisions or any part thereof unless the provisions of this section and RCW 39.08.065 have been complied with.

10. Modification.

This document cannot be modified, nor the obligations created hereunder terminated, without the City's express written consent.

11. Governing Law--Venue.

Any action for claims arising out of or relating to this Agreement shall be governed by the laws of the State of Washington. Venue shall be in Pierce County Superior Court.

PRINCIPAL:

_____

By: _____

Title _____

PRINCIPAL:

_____

By: _____

Title _____

SURETY:

_____

By:_____

Title _____

Accepted by the City this _____ day of

_____, 20____.

By:_____

Title _____

[Power of Attorney must be attached to Bond]

AMENDMENTS TO THE STANDARD SPECIFICATIONS

INTRO.AP1

INTRODUCTION

The following Amendments and Special Provisions shall be used in conjunction with the 2016 Standard Specifications for Road, Bridge, and Municipal Construction.

AMENDMENTS TO THE STANDARD SPECIFICATIONS

The following Amendments to the Standard Specifications are made a part of this contract and supersede any conflicting provisions of the Standard Specifications. For informational purposes, the date following each Amendment title indicates the implementation date of the Amendment or the latest date of revision.

Each Amendment contains all current revisions to the applicable section of the Standard Specifications and may include references which do not apply to this particular project.

1-01.AP1

Section 1-01, Definitions and Terms
August 1, 2016

1-01.3 Definitions

The following new term and definition is inserted after the eighth paragraph:

> **Cold Weather Protection Period** – A period of time 7 days from the day of concrete placement or the duration of the cure period, whichever is longer.

1-02.AP1

Section 1-02, Bid Procedures and Conditions
April 4, 2016

1-02.4(1) General

The first sentence of the last paragraph is revised to read:

> Any prospective Bidder desiring an explanation or interpretation of the Bid Documents, shall request the explanation or interpretation in writing by close of business on the Thursday preceding the bid opening to allow a written reply to reach all prospective Bidders before the submission of their Bids.

1-02.9 Delivery of Proposal

The last sentence of the third paragraph is revised to read:

> The Contracting Agency will not open or consider any Proposal when the Proposal or Bid deposit is received after the time specified for receipt of Proposals or received in a location other than that specified for receipt of Proposals unless an emergency or unanticipated event interrupts normal work processes of the Contracting Agency so that Proposals cannot be received.

The following new paragraph is inserted before the last paragraph:

If an emergency or unanticipated event interrupts normal work processes of the Contracting Agency so that Proposals cannot be received at the office designated for receipt of bids as specified in Section 1-02.12 the time specified for receipt of the Proposal will be deemed to be extended to the same time of day specified in the solicitation on the first work day on which the normal work processes of the Contracting Agency resume.

1-02.12 Public Opening of Proposals

This section is supplemented with the following new paragraph:

If an emergency or unanticipated event interrupts normal work processes of the Contracting Agency so that Proposals cannot be opened at the time indicated in the call for Bids the time specified for opening of Proposals will be deemed to be extended to the same time of day on the first work day on which the normal work processes of the Contracting Agency resume.

1-04.AP1

Section 1-04, Scope of the Work
August 1, 2016

1-04.2 Coordination of Contract Documents, Plans, Special Provisions, Specifications, and Addenda

The following new paragraph is inserted before the second to last paragraph:

Whenever reference is made in these Specifications or the Special Provisions to codes, rules, specifications, and standards, the reference shall be construed to mean the code, rule, specification, or standard that is in effect on the Bid advertisement date, unless otherwise stated or as required by law.

1-06.AP1

Section 1-06, Control of Material
January 4, 2016

This section is supplemented with the following new section and subsections:

1-06.6 Recycled Materials

The Contractor shall make their best effort to utilize recycled materials in the construction of the project; the use of recycled concrete aggregate as specified in Section 1-06.6(1)A is a requirement of the Contract.

The Contractor shall submit a Recycled Material Utilization Plan as a Type 1 Working Drawing within 30 calendar days after the Contract is executed. The plan shall provide the Contractor's anticipated usage of recycled materials for meeting the requirements of these Specifications. The quantity of recycled materials will be provided in tons and as a percentage of the Plan quantity for each material listed in Section 9-03.21(1)E Table on Maximum Allowable Percent (By Weight) of Recycled Material. When a Contract does not include Work that requires the use of a material that is included in the requirements for using materials the Contractor may state in their plan that no recycled materials are proposed for use.

Prior to Physical Completion the Contractor shall report the quantity of recycled materials that were utilized in the construction of the project for each of the items listed in Section 9-03.21. The report shall include hot mix asphalt, recycled concrete aggregate, recycled glass, steel furnace slag and other recycled materials (e.g. utilization of on-site material and aggregates from concrete returned to the supplier). The Contractor's report shall be provided on DOT Form 350-075 Recycled Materials Reporting.

1-06.6(1) Recycling of Aggregate and Concrete Materials

1-06.6(1)A General

The minimum quantity of recycled concrete aggregate shall be 25 percent of the total quantity of aggregate that is incorporated into the Contract for those items listed in Section 9-03.21(1)E Table on Maximum Allowable Percent (By Weight) of Recycled Material that allow the use of recycled concrete aggregate. The percentage of recycled material incorporated into the project for meeting the required percentage will be calculated in tons based on the quantity of recycled concrete used on the entire Contract and not as individual items.

If the Contractor's total cost for Work with recycled concrete aggregate is greater than without the Contractor may choose to not use recycled concrete aggregate. When the Contractor does not meet the minimum requirement of 25 percent recycled concrete aggregate for the Contract due to costs or any other reason the following shall be submitted:

1. A cost estimate for each material listed in Section 9-03.21(1)E that is utilized on the Contract. The cost estimate shall include the following:

    a. The estimated costs for the Work for each material with 25 percent recycled concrete aggregate. The cost estimate shall include for each material a copy of the price quote from the supplier with the lowest total cost for the Work.

    b. The estimated costs for the Work for each material without recycled concrete aggregate.

The Contractor's cost estimates shall be submitted as an attachment to the Recycled Materials Reporting form.

1-07.AP1

Section 1-07, Legal Relations and Responsibilities to the Public
August 1, 2016

1-07.1 Laws to be Observed

In the second to last sentence of the third paragraph, "WSDOT" is revised to read "Contracting Agency".

1-07.2(2) State Sales Tax: WAC 458-20-170 – Retail Sales Tax

The last three sentences of the first paragraph are deleted and replaced with the following new sentence:

The Contractor (Prime or Subcontractor) shall include sales or use tax on the purchase or rental of tools, machinery, equipment, or consumable supplies not integrated into the project, in the unit bid prices.

1-07.9(2) Posting Notices

Items 1 and 2 are revised to read:

1. EEOC - P/E-1 (revised 11/09, supplemented 09/15) – **Equal Employment Opportunity IS THE LAW** published by US Department of Labor. Post for projects with federal-aid funding.

2. FHWA 1022 (revised 05/15) – **NOTICE Federal-Aid Project** published by Federal Highway Administration (FHWA). Post for projects with federal-aid funding.

Items 5, 6 and 7 are revised to read:

5. WHD 1420 (revised 02/13) – **Employee Rights and Responsibilities Under The Family And Medical Leave Act** published by US Department of Labor. Post on all projects.

6. WHD 1462 (revised 01/16) – **Employee Polygraph Protection Act** published by US Department of Labor. Post on all projects.

7. F416-081-909 (revised 09/15) – **Job Safety and Health Law** published by Washington State Department of Labor and Industries. Post on all projects.

Items 9 and 10 are revised to read:

9. F700-074-909 (revised 06/13) – **Your Rights as a Worker in Washington State** by Washington State Department of Labor and Industries (L&I). Post on all projects.

10. EMS 9874 (revised 10/15) – **Unemployment Benefits** published by Washington State Employment Security Department. Post on all projects.

1-07.15(1) Spill Prevention, Control, and Countermeasures Plan

The second sentence of the first paragraph is deleted.

The first sentence of the second paragraph is revised to read:

The SPCC Plan shall address all fuels, petroleum products, hazardous materials, and other materials defined in Chapter 447 of the WSDOT Environmental Manual M 31-11.

Item number four of the fourth paragraph (up until the colon) is revised to read:

4. **Potential Spill Sources** – Describe each of the following for all potentially hazardous materials brought or generated on-site, including but not limited to materials used for equipment operation, refueling, maintenance, or cleaning:

The first sentence of item 7e of the fourth paragraph is revised to read:

BMP methods and locations where they are used to prevent discharges to ground or water during mixing and transfer of hazardous materials and fuel.

The last paragraph is deleted.

1-08.AP1

Section 1-08, Prosecution and Progress
August 1, 2016

1-08.1(1) Prompt Payment, Subcontract Completion and Return of Retainage Withheld

In item number 5 of the first paragraph, “WSDOT” is revised to read “Contracting Agency”.

1-08.5 Time for Completion

In item 2c of the last paragraph, “Quarterly Reports” is revised to read “Monthly Reports”.

1-09.AP1

Section 1-09, Measurement and Payment
April 4, 2016

1-09.6 Force Account

The second sentence of item number 4 is revised to read:

> A “specialized service” is a work operation that is not typically done by worker classifications as defined by the Washington State Department of Labor and Industries and by the Davis Bacon Act, and therefore bills by invoice for work in road, bridge and municipal construction.

1-10.AP1

Section 1-10, Temporary Traffic Control
August 1, 2016

1-10.1(2) Description

The first paragraph is revised to read:

> The Contractor shall provide flaggers and all other personnel required for labor for traffic control activities that are not otherwise specified as being furnished by the Contracting Agency.

In the third paragraph, “Project Engineer” is revised to read “Engineer”.

The following new paragraph is inserted after the third paragraph:

> The Contractor shall keep lanes, on-ramps, and off-ramps, open to traffic at all times except when Work requires closures. Ramps shall not be closed on consecutive interchanges at the same time, unless approved by the Engineer. Lanes and ramps shall be closed for the minimum time required to complete the Work. When paving hot mix asphalt the Contractor may apply water to the pavement to shorten the time required before reopening to traffic.

2-03.AP2

Section 2-03, Roadway Excavation and Embankment
August 1, 2016

2-03.3(7)C Contractor-Provided Disposal Site

The second paragraph is revised to read:

> The Contractor shall acquire all permits and approvals required for the use of the disposal sites before any waste is hauled off the project. The Contractor shall submit a Type 1 Working Drawing consisting of copies of the permits and approvals for any disposal sites to be used. The cost of any such permits and approvals shall be included in the Bid prices for other Work.

The third paragraph is deleted.

5-01.AP5

Section 5-01, Cement Concrete Pavement Rehabilitation
August 1, 2016

5-01.2 Materials

In the first paragraph, the following item is inserted after the item "Joint Sealants":

> Closed Cell Foam Backer Rod 9-04.2(3)A

5-01.3(8) Sealing Existing Transverse and Longitudinal Joints

This section's title is revised to read:

> **Sealing Existing Longitudinal and Transverse Joint**

The first paragraph is revised to read:

> The Contractor shall clean and seal existing longitudinal and transverse joints where shown in the Plans or as marked by the Engineer.

The first sentence of the second paragraph is revised to read:

> Old sealant and incompressible material shall be completely removed from the joint to the depth of the new reservoir with a diamond blade saw in accordance with the detail shown in the Standard Plans.

The fifth paragraph is revised to read:

> Immediately prior to sealing, the cracks shall be blown clean with dry oil-free compressed air. If shown in the Plans, a backer rod shall be placed at the base of the sawn reservoir. The joints shall be completely dry before the sealing installation may begin. Immediately following the air blowing and backer rod placement, if required, the sealant material shall be installed in conformance to manufacturer's recommendations and in accordance with Section 5-05.3(8)B.

5-01.3(11) Concrete Slurry and Grinding Residue

The last sentence of the first paragraph is revised to read:

> Slurry shall not be allowed to drain into an area open to traffic, off of the paved surface, into any drainage structure, water of the state, or wetlands.

The following new sentence is inserted at the end of the second paragraph:

> The Contractor shall submit copies of all disposal tickets to the Engineer within 5 calendar days.

5-01.4 Measurement

The fourth paragraph is revised to read:

> Sealing existing longitudinal and transverse joint will be measured by the linear foot, measured along the line of the completed joint.

5-01.5 Payment

The Bid item "Sealing Transverse and Longitudinal Joints", per linear foot and the paragraph following Bid item are revised to read:

> "Sealing Existing Longitudinal and Transverse Joint", per linear foot.
>
> The unit Contract price per linear foot for "Sealing Existing Longitudinal and Transverse Joint", shall be full payment for all costs to complete the Work as specified, including removing incompressible material, preparing and sealing existing transverse and longitudinal joints where existing transverse and longitudinal joints are cleaned and for all incidentals required to complete the Work as specified.

5-02.AP5

Section 5-02, Bituminous Surface Treatment
April 4, 2016

5-02.3(2) Preparation of Roadway Surface

This section is supplemented with the following new subsection:

> **5-02.3(2)E Crack Sealing**
>
> Where shown in the Plans, seal cracks and joints in the pavement in accordance with Section 5-04.3(4)A1 and the following:
>
> 1. Cracks ¼ inch to 1 inch in width - fill with hot poured sealant.
>
> 2. Cracks greater than 1 inch in width – fill with sand slurry.

5-04.AP5

Section 5-04, Hot Mix Asphalt
August 1, 2016

This section (and all subsections) is revised to read:

This Section 5-04 is written in a style which, unless otherwise indicated, shall be interpreted as direction to the Contractor.

5-04.1 Description

This Work consists of providing and placing one or more layers of plant-mixed hot mix asphalt (HMA) on a prepared foundation or base, in accordance with these Specifications and the lines, grades, thicknesses, and typical cross-sections shown in the Plans. The manufacture of HMA may include warm mix asphalt (WMA) processes in accordance with these Specifications.

HMA shall be composed of asphalt binder and mineral materials as required, and may include reclaimed asphalt pavement (RAP) or reclaimed asphalt shingles (RAS), mixed in the proportions specified to provide a homogeneous, stable, and workable mix.

5-04.2 Materials

Provide materials as specified in these sections:

Asphalt Binder	9-02.1(4)
Cationic Emulsified Asphalt	9-02.1(6)
Anti-Stripping Additive	9-02.4
Warm Mix Asphalt Additive	9-02.5
Aggregates	9-03.8
Reclaimed Asphalt Pavement (RAP)	9-03.8(3)B
Reclaimed Asphalt Shingles (RAS)	9-03.8(3)B
Mineral Filler	9-03.8(5)
Recycled Material	9-03.21
Joint Sealants	9-04.2
Closed Cell Foam Backer Rod	9-04.2(3)A

5-04.2(1) How to Get an HMA Mix Design on the QPL

Comply with each of the following:

- Develop the mix design in accordance with WSDOT SOP 732.
- Develop a mix design that complies with Sections 9-03.8(2) and 9-03.8(6).
- Develop a mix design no more than 6 months prior to submitting it for QPL evaluation.
- Submit mix designs to the WSDOT State Materials Laboratory in Tumwater, including WSDOT Form 350-042.

- Include representative samples of the materials that are to be used in the HMA production as part of the mix design submittal. See Section 5-04.2(1)A to determine when to include samples of RAP or RAS.

- Identify the brand, type, and percentage of anti-stripping additive in the mix design submittal.

- Include with the mix design submittal a certification from the asphalt binder supplier that the anti-stripping additive is compatible with the crude source and the formulation of asphalt binder proposed for use in the mix design.

- Do not include warm mix asphalt (WMA) additives when developing a mix design or submitting a mix design for QPL evaluation. The use of warm mix asphalt (WMA) additives is not part of the process for obtaining approval for listing a mix design on the QPL. Refer to Section 5-04.2(2)B.

The Contracting Agency's basis for approving, testing, and evaluating HMA mix designs for approval on the QPL is dependent on the contractual basis for acceptance of the HMA mixture, as shown in Table 1.

Table 1

Basis for Contracting Agency Evaluation of HMA Mix Designs for Approval on the QPL		
Contractual Basis for Acceptance of HMA Mixture (see Section 5-04.3(9))	**Basis for Contracting Agency Approval of Mix Design for Placement on QPL**	**Contracting Agency Materials Testing for Evaluation of the Mix Design**
Statistical Evaluation, or Nonstatistical Evaluation	WSDOT Standard Practice QC-8	The Contracting Agency will test the mix design materials for compliance with Sections 9-03.8(2) and 9-03.8(6).
Visual Evaluation	Review of Form 350-042 for compliance with Sections 9-03.8(2) and 9-03.8(6)	The Contracting Agency may elect to test the mix design materials, or evaluate in accordance with WSDOT Standard Practice QC-8, at its sole discretion.

If the Contracting Agency approves the mix design, it will be listed on the QPL for 12 consecutive months. The Contracting Agency may extend the 12 month listing provided the Contractor submits a certification letter to the Qualified Products Engineer verifying that the aggregate source and job mix formula (JMF) gradation, and asphalt binder crude source and formulation have not changed. The Contractor may submit the certification no sooner than one month prior to expiration of the initial 12 month mix design approval. Within 7 calendar days of receipt of the Contractor's certification, the Contracting Agency will update the QPL. The maximum duration for approval of a mix design and listing on the QPL will be 24 months from the date of initial approval or as approved by the Engineer.

5-04.2(1)A Mix Designs Containing RAP and/or RAS

Mix designs are classified by the RAP and/or RAS content as shown in Table 2.

Table 2

Mix Design Classification Based on RAP/RAS Content	
RAP/RAS Classification	**RAP/RAS Content[1]**
Low RAP/No RAS	0% □ RAP% □ 20% and RAS% = 0%
High RAP/Any RAS	20% < RAP% □ Maximum Allowable RAP[2] and/or 0% < RAS% □ Maximum Allowable RAS[2]

[1]Percentages in this table are by total weight of HMA

[2]See Table 4 to determine the limits on the maximum amount RAP and/or RAS.

5-04.2(1)A1 Low RAP/No RAS – Mix Design Submittals for Placement on QPL

For Low RAP/No RAS mix designs, comply with the following additional requirements:

1. Develop the mix design without the inclusion of RAP.

2. The asphalt binder grade shall be the grade indicated in the Bid item name or as otherwise required by the Contract.

3. Do not submit samples of RAP with these mix designs.

4. Testing RAP or RAS stockpiles is not required for obtaining approval for placing these mix designs on the QPL.

5-04.2(1)A2 High RAP/Any RAS - Mix Design Submittals for Placement on QPL

For High RAP/Any RAS mix designs, comply with the following additional requirements:

1. For mix designs with any RAS, test the RAS stockpile (and RAP stockpile if any RAP is in the mix design) in accordance with Table 3.

2. For High RAP mix designs with no RAS, test the RAP stockpile in accordance with Table 3.

3. For mix designs with High RAP/Any RAS, construct a single stockpile for RAP and a single stockpile for RAS and isolate (sequester) these stockpiles from further stockpiling before beginning development of the mix design. Test the RAP and RAS during stockpile construction as required by item 1 and 2 above. Use the test data in developing the mix design, and report the test data to the Contracting Agency on WSDOT Form 350-

042 as part of the mix design submittal for approval on the QPL. Account for the reduction in asphalt binder contributed from RAS in accordance with AASHTO PP 78. Do not add to these stockpiles after starting the mix design process.

Table 3

Test Frequency of RAP/RAS During RAP/RAS Stockpile Construction For Approving a High RAP/Any RAS Mix Design for Placement on the QPL		
Test Frequency[1]	Test for	Test Method
• 1/1000 tons of RAP (minimum of 10 per mix design) and • 1/100 tons of RAS (minimum of 10 per mix design)	Asphalt Binder Content and Sieve Analysis of Fine and Coarse Aggregate	FOP for AASHTO T 308 and FOP for WAQTC T 27/T 11

[1]"tons", in this table, refers to tons of the reclaimed material before being incorporated into HMA.

4. Limit the amount of RAP and/or RAS used in a High RAP/Any RAS mix design by the amount of binder contributed by the RAP and/or RAS, in accordance with Table 4.

Table 4

Maximum Amount of RAP and/or RAS in HMA Mixture	
Maximum Amount of Binder Contributed from:	
RAP	RAS
40%[1] minus contribution of binder from RAS	20%[2]

[1] Calculated as the weight of asphalt binder contributed from the RAP as a percentage of the total weight of asphalt binder in the mixture.

[2] Calculated as the weight of asphalt binder contributed from the RAS as a percentage of the total weight of asphalt binder in the mixture.

5. Develop the mix design including RAP, RAS, recycling agent, and new binder.

6. Extract, recover, and test the asphalt residue from the RAP and RAS stockpiles to determine the percent of recycling agent and/or grade of new asphalt binder needed to meet but not exceed the performance grade (PG) of asphalt binder required by the Contract.

   a. Perform the asphalt extraction in accordance with AASHTO T 164 or ASTM D 2172 using reagent grade trichloroethylene.

b. Perform the asphalt recovery in accordance with AASHTO R 59 or ASTM D 1856.

c. Test the recovered asphalt residue in accordance with AASHTO R 29 to determine the asphalt binder grade in accordance with Section 9-02.1(4).

d. After determining the recovered asphalt binder grade, determine the percent of recycling agent and/or grade of new asphalt binder in accordance with ASTM D 4887.

e. Test the final blend of recycling agent, binder recovered from the RAP and RAS, and new asphalt binder in accordance with AASHTO R 29. The final blended binder shall meet but not exceed the performance grade of asphalt binder required by the Contract and comply with the requirements of Section 9-02.1(4).

7. Include the following test data with the mix design submittal:

a. All test data from RAP and RAS stockpile construction.

b. All data from testing the recovered and blended asphalt binder.

8. Include representative samples of the following with the mix design submittal:

a. RAP and RAS.

b. 100 grams of recovered asphalt residue from the RAP and RAS that are to be used in the HMA production.

5-04.2(1)B Commercial HMA - Mix Design Submittal for Placement on QPL

For HMA used in the Bid item Commercial HMA, in addition to the requirements of 5-04.2(1) identify the following in the submittal:

1. Commercial HMA

2. Class of HMA

3. Performance grade of binder

4. Equivalent Single Axle Load (ESAL)

The Contracting Agency may elect to approve Commercial HMA mix designs without evaluation.

5-04.2(1)C Mix Design Resubmittal for QPL Approval

Develop a new mix design and resubmit for approval on the QPL when any of the following changes occur. When these occur, discontinue using the mix design until after it is reapproved on the QPL.

1. Change in the source of crude petroleum used in the asphalt binder.

2. Changes in the asphalt binder refining process.

3. Changes in additives or modifiers in the asphalt binder.

4. Changes in the anti-strip additive, brand, type or quantity.

5. Changes to the source of material for aggregate.

6. Changes to the job mix formula that exceed the amounts as described in item 2 of Section 9-03.8(7), unless otherwise approved by the Engineer.

7. Changes in the percentage of material from a stockpile, when such changes exceed 5% of the total aggregate weight.

    a. Changes to the percentage of material from a stockpile will be calculated based on the total aggregate weight (not including the weight of RAP) for Low RAP/No RAS mix designs.

    b. For High RAP/Any RAS mix designs, changes in the percentage of material from a stockpile will be based on total aggregate weight including the weight of RAP (and/or RAS when included in the mixture).

Prior to making any change in the amount of RAS in an approved mix design, notify the Engineer for determination of whether a new mix design is required, and obtain the Engineer's approval prior to implementing such changes.

5-04.2(2) Mix Design – Obtaining Project Approval

Use only mix designs listed on the Qualified Products List (QPL). Submit WSDOT Form 350-041 to the Engineer to request approval to use a mix design from the QPL. Changes to the job mix formula (JMF) that have been approved on other contracts may be included. The Engineer may reject a request to use a mix design if production of HMA using that mix design on any contract is not in compliance with Section 5-04.3(11)D, E, F, and G for mixture or compaction.

5-04.2(2)A Changes to the Job Mix Formula

The approved mix design obtained from the QPL will be considered the starting job mix formula (JMF) and shall be used as the initial basis for acceptance of HMA mixture, as detailed in Section 5-04.3(9).

During production the Contractor may request to adjust the JMF. Any adjustments to the JMF will require approval of the Engineer and shall be made in accordance with item 2 of Section 9-03.8(7). After approval by the

Engineer, such adjusted JMF's shall constitute the basis for acceptance of the HMA mixture.

5-04.2(2)B Using Warm Mix Asphalt Processes

The Contractor may, at the Contractor's discretion, elect to use warm mix asphalt (WMA) processes for producing HMA. WMA processes include organic additives, chemical additives, and foaming. The use of WMA is subject to the following:

- Do not use WMA processes in the production of High RAP/Any RAS mixtures.
- Before using WMA processes, obtain the Engineer's approval using WSDOT Form 350-076 to describe the proposed WMA process.

5-04.3 Construction Requirements

5-04.3(1) Weather Limitations

Do not place HMA for wearing course on any Traveled Way beginning October 1st through March 31st of the following year, without written concurrence from the Engineer.

Do not place HMA on any wet surface, or when the average surface temperatures are less than those specified in Table 5, or when weather conditions otherwise prevent the proper handling or finishing of the HMA.

Table 5

Minimum Surface Temperature for Paving		
Compacted Thickness (Feet)	**Wearing Course**	**Other Courses**
Less than 0.10	55°F	45°F
0.10 to 0.20	45°F	35°F
More than 0.20	35°F	35°F

5-04.3(2) Paving Under Traffic

These requirements apply when the Roadway being paved is open to traffic.

In hot weather, the Engineer may require the application of water to the pavement to accelerate the finish rolling of the pavement and to shorten the time required before reopening to traffic.

During paving operations, maintain temporary pavement markings throughout the project. Install temporary pavement markings on the Roadway prior to opening to traffic. Temporary pavement markings shall comply with Section 8-23.

5-04.3(3) Equipment

5-04.3(3)A Mixing Plant

Equip mixing plants as follows.

1. **Use tanks for storage and preparation of asphalt binder which:**

   - Heat the contents by means that do not allow flame to contact the contents or the tank, such as by steam or electricity.

- Heat and hold contents at the required temperatures.

- Continuously circulate contents to provide uniform temperature and consistency during the operating period.

- Provide an asphalt binder sampling valve, in either the storage tank or the supply line to the mixer.

2. **Provide thermometric equipment:**

   - In the asphalt binder feed line near the charging valve at the mixer unit, capable of detecting temperature ranges expected in the HMA and in a location convenient and safe for access by Inspectors.

   - At the discharge chute of the drier to automatically register or indicate the temperature of the heated aggregates, and situated in full view of the plant operator.

3. **When heating asphalt binder:**

   - Do not exceed the maximum temperature of the asphalt binder recommended by the asphalt binder supplier.

   - Avoid local variations in heating.

   - Provide a continuous supply of asphalt binder to the mixer at a uniform average temperature with no individual variations exceeding 25°F.

4. **Provide a mechanical sampler for sampling mineral materials that:**

   - Meets the crushing or screening requirements of Section 1-05.6.

5. **Provide HMA sampling equipment that complies with WSDOT SOP T-168.**

   - Use a mechanical sampling device installed between the discharge of the silo and the truck transport, approved by the Engineer, or

   - Platforms or devices to enable sampling from the truck transport without entering the truck transport for sampling HMA.

6. **Provide for setup and operation of the Contracting Agency's field testing:**

   - As required in Section 3-01.2(2).

7. **Provide screens or a lump breaker:**

- When using any RAP or any RAS, to eliminate oversize RAP or RAS particles from entering the pug mill or drum mixer.

5-04.3(3)B Hauling Equipment

Provide HMA hauling equipment with tight, clean, smooth metal beds and a cover of canvas or other suitable material of sufficient size to protect the HMA from adverse weather. Securely attach the cover to protect the HMA whenever the weather conditions during the work shift include, or are forecast to include, precipitation or an air temperature less than 45°F.

Prevent HMA from adhering to the hauling equipment. Spray metal beds with an environmentally benign release agent. Drain excess release agent prior to filling hauling equipment with HMA. Do not use petroleum derivatives or other coating material that contaminate or alter the characteristics of the HMA. For hopper trucks, operate the conveyer during the process of applying the release agent.

5-04.3(3)C Pavers

Use self-contained, power-propelled pavers provided with an internally heated vibratory screed that is capable of spreading and finishing courses of HMA in lane widths required by the paving section shown in the Plans.

When requested by the Engineer, provide written certification that the paver is equipped with the most current equipment available from the manufacturer for the prevention of segregation of the coarse aggregate particles. The certification shall list the make, model, and year of the paver and any equipment that has been retrofitted to the paver.

Operate the screed in accordance with the manufacturer's recommendations and in a manner to produce a finished surface of the required evenness and texture without tearing, shoving, segregating, or gouging the mixture. Provide a copy of the manufacturer's recommendations upon request by the Contracting Agency. Extensions to the screed will be allowed provided they produce the same results, including ride, density, and surface texture as obtained by the primary screed. In the Travelled Way do not use extensions without both augers and an internally heated vibratory screed.

Equip the paver with automatic screed controls and sensors for either or both sides of the paver. The controls shall be capable of sensing grade from an outside reference line, sensing the transverse slope of the screed, and providing automatic signals that operate the screed to maintain the desired grade and transverse slope. Construct the sensor so it will operate from a reference line or a mat referencing device. The transverse slope controller shall be capable of maintaining the screed at the desired slope within plus or minus 0.1 percent.

Equip the paver with automatic feeder controls, properly adjusted to maintain a uniform depth of material ahead of the screed.

Manual operation of the screed is permitted in the construction of irregularly shaped and minor areas. These areas include, but are not limited to, gore areas, road approaches, tapers and left-turn channelizations.

When specified in the Contract, provide reference lines for vertical control. Place reference lines on both outer edges of the Traveled Way of each Roadway. Horizontal control utilizing the reference line is permitted. Automatically control the grade and slope of intermediate lanes by means of reference lines or a mat referencing device and a slope control device. When the finish of the grade prepared for paving is superior to the established tolerances and when, in the opinion of the Engineer, further improvement to the line, grade, cross-section, and smoothness can best be achieved without the use of the reference line, a mat referencing device may be substituted for the reference line. Substitution of the device will be subject to the continued approval of the Engineer. A joint matcher may be used subject to the approval of the Engineer. The reference line may be removed after completion of the first course of HMA when approved by the Engineer. Whenever the Engineer determines that any of these methods are failing to provide the necessary vertical control, the reference lines will be reinstalled by the Contractor.

Furnish and install all pins, brackets, tensioning devices, wire, and accessories necessary for satisfactory operation of the automatic control equipment.

If the paving machine in use is not providing the required finish, the Engineer may suspend Work as allowed by Section 1-08.6.

5-04.3(3)D Material Transfer Device or Material Transfer Vehicle

Use a material transfer device (MTD) or material transfer vehicle (MTV) to deliver the HMA from the hauling equipment to the paving machine for any lift in (or partially in) the top 0.30 feet of the pavement section used in traffic lanes. However, an MTD/V is not required for HMA placed in irregularly shaped and minor areas such as tapers and turn lanes, or for HMA mixture that is accepted by Visual Evaluation. At the Contractor's request the Engineer may approve paving without an MTD/V; the Engineer will determine if an equitable adjustment in cost or time is due. If a windrow elevator is used, the Engineer may limit the length of the windrow in urban areas or through intersections.

To be approved for use, an MTV:

1. Shall be a self-propelled vehicle, separate from the hauling vehicle or paver.

2. Shall not connected to the hauling vehicle or paver.

3. May accept HMA directly from the haul vehicle or pick up HMA from a windrow.

4. Shall mix the HMA after delivery by the hauling equipment and prior to placement into the paving machine.

5. Shall mix the HMA sufficiently to obtain a uniform temperature throughout the mixture.

To be approved for use, an MTD:

1. Shall be positively connected to the paver.

2. May accept HMA directly from the haul vehicle or pick up HMA from a windrow.

3. Shall mix the HMA after delivery by the hauling equipment and prior to placement into the paving machine.

4. Shall mix the HMA sufficiently to obtain a uniform temperature throughout the mixture.

5-04.3(3)E Rollers

Operate rollers in accordance with the manufacturer's recommendations. When requested by the Engineer, provide a Type 1 Working Drawing of the manufacturer's recommendation for the use of any roller planned for use on the project. Do not use rollers that crush aggregate, produce pickup or washboard, unevenly compact the surface, displace the mix, or produce other undesirable results.

5-04.3(4) Preparation of Existing Paved Surfaces

Before constructing HMA on an existing paved surface, the entire surface of the pavement shall be clean. Entirely remove all fatty asphalt patches, grease drippings, and other deleterious substances from the existing pavement to the satisfaction of the Engineer. Thoroughly clean all pavements or bituminous surfaces of dust, soil, pavement grindings, and other foreign matter. Thoroughly remove any cleaning or solvent type liquids used to clean equipment spilled on the pavement before paving proceeds. Fill all holes and small depressions with an appropriate class of HMA. Level and thoroughly compact the surface of the patched area.

Apply a uniform coat of asphalt (tack coat) to all paved surfaces on which any course of HMA is to be placed or abutted. Apply tack coat to cover the cleaned existing pavement with a thin film of residual asphalt free of streaks and bare spots. Apply a heavy application of tack coat to all joints. For Roadways open to traffic, limit the application of tack coat to surfaces that will be paved during the same working shift. Equip the spreading equipment with a thermometer to indicate the temperature of the tack coat material.

Do not operate equipment on tacked surfaces until the tack has broken and cured. Repair tack coat damaged by the Contractor's operation, prior to placement of the HMA.

Unless otherwise approved by the Engineer, use CSS-1, CSS-1h,STE-1, or Performance Graded (PG) asphalt for tack coat. The CSS-1 and CSS-1h emulsified asphalt may be diluted with water at a rate not to exceed one part water to one part emulsified asphalt. Do not allow the tack coat material to exceed the maximum temperature recommended by the asphalt supplier.

When shown in the Plans, prelevel uneven or broken surfaces over which HMA is to be placed by using an asphalt paver, a motor patrol grader, or by hand raking, as approved by the Engineer.

5-04.3(4)A Crack Sealing

5-04.3(4)A1 General

When the Proposal includes a pay item for crack sealing, seal all cracks ¼ inch in width and greater.

Cleaning: Ensure that cracks are thoroughly clean, dry and free of all loose and foreign material when filling with crack sealant material. Use a hot compressed air lance to dry and warm the pavement surfaces within the crack immediately prior to filling a crack with the sealant material. Do not overheat pavement. Do not use direct flame dryers. Routing cracks is not required.

Sand Slurry: For cracks that are to be filled with sand slurry, thoroughly mix the components and pour the mixture into the cracks until full. Add additional CSS-1 emulsified asphalt to the sand slurry as needed for workability to ensure the mixture will completely fill the crack. Strike off the sand slurry flush with the existing pavement surface and allow the mixture to cure. Top off cracks that were not completely filled with additional sand slurry. Do not place the HMA overlay until the slurry has fully cured.

Hot Poured Sealant: For cracks that are to be filled with hot poured sealant, apply the material in accordance with these requirements and the manufacturer's recommendations. Furnish a Type 1 Working Drawing of the manufacturer's recommendations to the Engineer prior to the start of work, including the manufacturer's recommended heating time and temperatures, allowable storage time and temperatures after initial heating, allowable reheating criteria, and application temperature range. Confine hot poured sealant material within the crack. Clean any overflow of sealant from the pavement surface. If, in the opinion of the Engineer, the Contractor's method of sealing the cracks with hot poured sealant results in an excessive amount of material on the pavement surface, stop and correct the operation to eliminate the excess material.

5-04.3(4)A2 Crack Sealing Areas Prior to Paving

In areas where HMA will be placed, use sand slurry to fill the cracks.

5-04.3(4)A3 Crack Sealing Areas Not to be Paved

In areas where HMA will not be placed, fill the cracks as follows:

1. Cracks ¼ inch to 1 inch in width - fill with hot poured sealant.

2. Cracks greater than 1 inch in width – fill with sand slurry.

5-04.3(4)B Soil Residual Herbicide

Where shown in the Plans, apply one application of an approved soil residual herbicide. Comply with Section 8-02.3(3)B. Complete paving within 48 hours of applying the herbicide.

Use herbicide registered with the Washington State Department of Agriculture for use under pavement. Before use, obtain the Engineer's approval of the

herbicide and the proposed rate of application. Include the following information in the request for approval of the material:

1. Brand Name of the Material,

2. Manufacturer,

3. Environmental Protection Agency (EPA) Registration Number,

4. Material Safety Data Sheet, and

5. Proposed Rate of Application.

5-04.3(4)C Pavement Repair

Excavate pavement repair areas and backfill these with HMA in accordance with the details shown in the Plans and as staked. Conduct the excavation operations in a manner that will protect the pavement that is to remain. Repair pavement not designated to be removed that is damaged as a result of the Contractor's operations to the satisfaction of the Engineer at no cost to the Contracting Agency. Excavate only within one lane at a time unless approved otherwise by the Engineer. Do not excavate more area than can be completely backfilled and compacted during the same shift.

Unless otherwise shown in the Plans or determined by the Engineer, excavate to a depth of 1.0 feet. The Engineer will make the final determination of the excavation depth required.

The minimum width of any pavement repair area shall be 40 inches unless shown otherwise in the Plans. Before any excavation, sawcut the perimeter of the pavement area to be removed unless the pavement in the pavement repair area is to be removed by a pavement grinder.

Excavated materials shall be the property of the Contractor and shall be disposed of in a Contractor-provided site off the Right of Way or used in accordance with Sections 2-02.3(3) or 9-03.21.

Apply a heavy application of tack coat to all surfaces of existing pavement in the pavement repair area, in accordance with Section 5-04.3(4).

Place the HMA backfill in lifts not to exceed 0.35-foot compacted depth. Thoroughly compact each lift by a mechanical tamper or a roller.

5-04.3(5) Producing/Stockpiling Aggregates, RAP, & RAS

Produce aggregate in compliance with Section 3-01. Comply with Section 3-02 for preparing stockpile sites, stockpiling, and removing from stockpile each of the following: aggregates, RAP, and RAS. Provide sufficient storage space for each size of aggregate, RAP and RAS. Fine aggregate or RAP may be uniformly blended with the RAS as a method of preventing the agglomeration of RAS particles. Remove the aggregates, RAP and RAS from stockpile(s) in a manner that ensures minimal segregation when being moved to the HMA plant for processing into the final mixture. Keep different aggregate sizes separated until they have been delivered to the HMA plant.

5-04.3(5)A Stockpiling RAP or RAS for High RAP/Any RAS Mixes

Do not place any RAP or RAS into a stockpile which has been sequestered for a High RAP/Any RAS mix design. Do not incorporate any RAP or RAS into a High RAP/Any RAS mixture from any source other than the stockpile which was sequestered for approval of that particular High RAP/Any RAS mix design.

RAP that is used in a Low RAP/No RAS mix is not required to come from a sequestered stockpile.

5-04.3(6) Mixing

The asphalt supplier shall introduce anti-stripping additive, in the amount designated on the QPL for the mix design, into the asphalt binder prior to shipment to the asphalt mixing plant.

Anti-strip is not required for temporary work that will be removed prior to Physical Completion.

Use asphalt binder of the grade, and from the supplier, in the approved mix design.

Prior to introducing reclaimed materials into the asphalt plant, remove wire, nails, and other foreign material. Discontinue use of the reclaimed material if the Engineer, in their sole discretion, determines the wire, nails, or other foreign material to be excessive.

Size RAP and RAS prior to entering the mixer to provide uniform and thoroughly mixed HMA. If there is evidence of the RAP or RAS not breaking down during the heating and mixing of the HMA, immediately suspend the use of the RAP or RAS until changes have been approved by the Engineer.

After the required amount of mineral materials, RAP, RAS, new asphalt binder and recycling agent have been introduced into the mixer, mix the HMA until complete and uniform coating of the particles and thorough distribution of the asphalt binder throughout the mineral materials, RAP and RAS is ensured.

Upon discharge from the mixer, ensure that the temperature of the HMA does not exceed the optimum mixing temperature shown on the approved Mix Design Report by more than 25°F, or as approved by the Engineer. When a WMA additive is included in the manufacture of HMA, do not heat the WMA additive (at any stage of production including in binder storage tanks) to a temperature higher than the maximum recommended by the manufacturer of the WMA additive.

A maximum water content of 2 percent in the mix, at discharge, will be allowed providing the water causes no problems with handling, stripping, or flushing. If the water in the HMA causes any of these problems, reduce the moisture content.

During the daily operation, HMA may be temporarily held in approved storage facilities. Do not incorporate HMA into the Work that has been held for more

than 24 hours after mixing. Provide an easily readable, low bin-level indicator on the storage facility that indicates the amount of material in storage. Waste the HMA in storage when the top level of HMA drops below the top of the cone of the storage facility, except as the storage facility is being emptied at the end of the working shift. Dispose of rejected or waste HMA at no expense to the Contracting Agency.

5-04.3(7) Spreading and Finishing

Do not exceed the maximum nominal compacted depth of any layer in any course, as shown in Table 6, unless approved by the Engineer:

Table 6

Maximum Nominal Compacted Depth of Any Layer		
HMA Class	**Wearing Course**	**Other than Wearing Course**
1 inch	0.35 feet	0.35 feet
¾ and ½ inch	0.30 feet	0.35 feet
3/8 inch	0.15 feet	0.15 feet

Use HMA pavers complying with Section 5-04.3(3) to distribute the mix. On areas where irregularities or unavoidable obstacles make the use of mechanical spreading and finishing equipment impractical, the paving may be done with other equipment or by hand.

When more than one JMF is being utilized to produce HMA, place the material produced for each JMF with separate spreading and compacting equipment. Do not intermingle HMA produced from more than one JMF. Each strip of HMA placed during a work shift shall conform to a single JMF established for the class of HMA specified unless there is a need to make an adjustment in the JMF.

5-04.3(8) Aggregate Acceptance Prior to Incorporation in HMA

Sample aggregate for meeting the requirements of Section 3-04 prior to being incorporated into HMA. (The acceptance data generated for the Section 3-04 acceptance analysis will not be commingled with the acceptance data generated for the Section 5-04.3(9) acceptance analysis.) Aggregate acceptance samples shall be taken as described in Section 3-04. Aggregate acceptance testing will be performed by the Contracting Agency. Aggregate contributed from RAP and/or RAS will not be evaluated under Section 3-04.

For aggregate that will be used in HMA mixture which will be accepted by either Statistical or Nonstatistical Evaluation, the Contracting Agency's acceptance of the aggregate will be based on:

1. Samples taken prior to mixing with asphalt binder, RAP, or RAS;

2. Testing for the materials properties of fracture, uncompacted void content, and sand equivalent;

3. Evaluation by the Contracting Agency in accordance with Section 3-04, including price adjustments as described therein.

For aggregate that will be used in HMA which will be accepted by Visual Evaluation, evaluation in accordance with items 1, 2, and 3 above is at the discretion of the Engineer.

5-04.3(9) HMA Mixture Acceptance

The Contracting Agency will evaluate HMA mixture for acceptance by one of three methods as determined from the criteria in Table 7.

Table 7

Basis of Acceptance for HMA Mixture			
	Visual Evaluation	**Nonstatistical Evaluation**	**Statistical Evaluation**
Criteria for Selecting the Evaluation Method	• Commercial HMA placed at any location • Any HMA placed in: ○ sidewalks ○ road approaches ○ ditches ○ slopes ○ paths ○ trails ○ gores ○ prelevel ○ temporary pavement[1] ○ pavement repair • Other nonstructural applications of HMA as approved by the Engineer	• All HMA mixture of the same class and PG binder grade with a Proposal quantity less than 4,000 tons. (Exclude the tonnage of HMA mixture accepted by Visual Evaluation.)	• All HMA mixture other than that accepted by Visual or Nonstatistical Evaluation

[1] Temporary pavement is HMA that will be removed before Physical Completion of the Contract.

5-04.3(9)A Test Sections

This Section applies to HMA mixture accepted by Statistical Evaluation and mixture accepted by Nonstatistical Evaluation. A test section is not allowed for HMA accepted by Visual Evaluation.

The purpose of a test section is to determine whether or not the Contractor's mix design and production processes will produce HMA meeting the Contract requirements related to mixture. Construct HMA mixture test sections at the beginning of paving, using at least 600 tons and a maximum of 1,000 tons or as specified by the Engineer. Each test section shall be constructed in one continuous operation.

5-04.3(9)A1 Test Section – When Required, When to Stop

Use Tables 8 and 9 to determine when a test section is required, optional, or not allowed, and to determine when performing test sections may end. Each mix design will be evaluated independently for the test section requirements. If more than one test section is

required, each test section shall be evaluated separately by the criteria in table 8 and 9.

Table 8

Criteria for Conducting and Evaluating HMA Mix Texture Sections (For HMA Mixture Accepted by Statistical or Nonstatistical Evaluation)		
	High RAP/Any RAS	**Low RAP/No RAS**
Is Mixture Test Section Optional or Mandatory?	Mandatory[1]	At Contractor's Option[3]
Waiting period after paving the test section.	4 calendar days[2]	4 calendar days[2]
What Must Happen to Stop Performing Test Sections?	Meet "Results Required to Stop Performing Test Sections" in Table 9 for High RAP/Any RAS.	Provide samples and respond to WSDOT test results required by Table 9 for Low RAP/No RAS.

[1]If a mix design has produced an acceptable test section on a previous contract (paved in the same calendar year, from the same plant, using the same JMF) the test section may be waived if approved by the Engineer.

[2]This is to provide time needed by the Contracting Agency to complete testing and the Contractor to adjust the mixture in response to those test results. Paving may resume when this is done.

[3]For HMA with Low RAP/No RAS, which is accepted by Nonstatistical Evaluation, a test section is not allowed.

Table 9

Results Required to Stop Performing HMA Mixture Test Sections[1] (For HMA Mixture Accepted by Statistical or Nonstatistical Evaluation)		
Test Property	**Type of HMA**	
	High RAP/Any RAS	**Low RAP/No RAS**
Gradation	Minimum PF_i of 0.95 based on the criteria in Section 5-04.3(9)B4[2]	None[4]
Asphalt Binder	Minimum PF_i of 0.95 based on the criteria in Section 5-04.3(9)B4[2]	None[4]
V_a	Minimum PF_i of 0.95 based on the criteria in Section 5-	None[4]

	04.3(9)B4[2]	
Hamburg Wheel Track Indirect Tensile Strength	Meet requirements of Section 9-03.8(2).[3]	These tests will not be done as part of Test Section.
Aggregates Sand Equivalent Uncompacted Void Content Fracture	Nonstatistical Evaluation in accordance with the requirements of Section 3-04[3]	None[3]

[1]In addition to the requirements of this table, acceptance of the HMA mixture used in each test section is subject to the acceptance criteria and price adjustments for Statistical Evaluation or Non-statistical Evaluation (see Table 7 and Table 9a).

[2]Divide the test section lot into three sublots, approximately equal in size. Take one sample from each sublot, and test each sample for the property in the first column.

[3]Take one sample for each test section lot. Test the sample for the properties in the first column.

[4]Divide the test section lot into three sublots, approximately equal in size. Take one sample from each sublot, and test each sample for the property in the first column. There are no criteria for discontinuing test sections for these mixes; however, the contractor must comply with Section 5-04.3(11)F before resuming paving.

5-04.3(9)A2 Test Section – Evaluating the HMA Mixture in a Test Section

The Engineer will evaluate the HMA mixture in each test section for rejection, acceptance, and price adjustments based on the criteria in Table 9a using the data generated from the testing required by Table 9. Each test section shall be considered a separate lot.

Table 9a

Acceptance Criteria for HMA Mixture Placed in a Test Section (For HMA Mixture Accepted by Statistical or Nonstatistical Evaluation)		
Test Property	**Type of HMA**	
	High RAP/Any RAS	**Low RAP/No RAS**
Gradation Asphalt Binder V_a	Statistical or Nonstatistical Evaluation - determined by the criteria in Table 7	Statistical or Nonstatistical Evaluation - determined by the criteria in Table 7
Hamburg Wheel Track Indirect Tensile Strength	Pass/Fail for the requirements of Section 9-03.8(2)[1]	N/A
HMA Aggregate	Nonstatistical	Nonstatistical

Sand Equivalent	Evaluation in accordance with the requirements of Section 3-04	Evaluation in accordance with the requirements of Section 3-04
Uncompacted Void Content		

[1]Failure to meet the specifications for Hamburg and/or IDT will cause the mixture in the test section to be rejected. Refer to Section 5-04.3(11).

5-04.3(9)B Mixture Acceptance – Statistical Evaluation

5-04.3(9)B1 Mixture Statistical Evaluation – Lots and Sublots

HMA mixture which is accepted by Statistical Evaluation will be evaluated by the Contracting Agency dividing that HMA tonnage into mixture lots, and each mixture lot will be evaluated using stratified random sampling by the Contracting Agency sub-dividing each mixture lot into mixture sublots. All mixture in a mixture lot shall be of the same mix design. The mixture sublots will be numbered in the order in which the mixture (of a particular mix design) is paved.

Each mixture lot comprises a maximum of 15 mixture sublots, except:

- The final mixture lot of each mix design on the Contract will comprise a maximum of 25 sublots.
- A mixture lot for a test section will consist of three sublots.

Each mixture sublot shall be approximately uniform in size with the maximum mixture sublot size as specified in Table 10. The quantity of material represented by the final mixture sublot of the project, for each mix design on the project, may be increased to a maximum of two times the mixture sublot quantity calculated. Should a lot accepted by statistical evaluation contain fewer than three sublots, the HMA will be accepted in accordance with nonstatistical evaluation.

Table 10

Maximum HMA Mixture Sublot Size For HMA Accepted by Statistical Evaluation	
HMA Original Plan Quantity (tons)[1]	**Maximum Sublot Size (tons)[2]**
< 20,000	1,000
20,000 to 30,000	1,500
>30,000	2,000

[1] "Plan quantity" means the plan quantity of all HMA of the same class and binder grade which is accepted by Statistical Evaluation.

[2] The maximum sublot size for each combination of HMA class and binder grade shall be calculated separately.

- For a mixture lot in progress with a mixture CPF less than 0.75, a new mixture lot will begin at the Contractor's request after the Engineer is satisfied that material conforming to the Specifications can be produced. See also Section 5-04.3(11)F.

- If, before completing a mixture lot, the Contractor requests a change to the JMF which is approved by the Engineer, the mixture produced in that lot after the approved change will be evaluated on the basis of the changed JMF, and the mixture produced in that lot before the approved change will be evaluated on the basis of the unchanged JMF; however, the mixture before and after the change will be evaluated in the same lot. Acceptance of subsequent mixture lots will be evaluated on the basis of the changed JMF.

5-04.3(9)B2 Mixture Statistical Evaluation – Sampling
Comply with Section 1-06.2(1).

Samples of HMA mixture which is accepted by Statistical Evaluation will be randomly selected from within each sublot, with one sample per sublot. The Engineer will determine the random sample location using WSDOT Test Method T 716. The Contractor shall obtain the sample when ordered by the Engineer. The Contractor shall sample the HMA mixture in the presence of the Engineer and in accordance with FOP for WAQTC T 168.

5-04.3(9)B3 Mixture Statistical Evaluation – Acceptance Testing
Comply with Section 1-06.2(1).

The Contracting Agency will test the mixture sample from each sublot (including sublots in a test section) for the properties shown in Table 11.

Table 11

Testing Required for each HMA Mixture Sublot		
Test	**Procedure**	**Performed by**
V_a	WSDOT SOP 731	Engineer
Asphalt Binder Content	FOP for AASHTO T 308	Engineer
Gradation: Percent Passing 1½″ , 1″ , ¾″ , ½″ , ⅜″ , No. 4, No. 8, No. 200	FOP for WAQTC T 27/T 11	Engineer

The mixture samples and tests taken for the purpose of determining acceptance of the test section (as described in Section 5-04.3(9)A) shall also be used as the test results for acceptance of the mixture described in 5-04.3(9)B3, 5-04.3(9)B4, 5-04.3(9)B5, and 5-04.3(9)B6.

5-04.3(9)B4 Mixture Statistical Evaluation – Pay Factors
Comply with Section 1-06.2(2).

The Contracting Agency will determine a pay factor (PF_i) for each of the properties in Table 11, for each mixture lot, using the quality level analysis in Section 1-06.2(2)D. For Gradation, a pay factor will be calculated for each of the sieve sizes listed in Table 11 which is equal

to or smaller than the maximum allowable aggregate size (100 percent passing sieve) of the HMA mixture. The USL and LSL shall be calculated using the Job Mix Formula Tolerances (for Statistical Evaluation) in Section 9-03.8(7).

If a constituent is not measured in accordance with these Specifications, its individual pay factor will be considered 1.00 in calculating the Composite Pay Factor (CPF).

5-04.3(9)B5 Mixture Statistical Evaluation – Composite Pay Factors (CPF)

Comply with Section 1-06.2(2).

In accordance with Section 1-06.2(2)D4, the Contracting Agency will determine a Composite Pay Factor (CPF) for each mixture lot from the pay factors calculated in Section 5-04.3(9)B4, using the price adjustment factors in Table 12. Unless otherwise specified, the maximum CPF for HMA mixture shall be 1.05.

Table 12

HMA Mixture Price Adjustment Factors	
Constituent	**Factor "f"**
All aggregate passing: 1½□, 1□, ¾□, ½″ , ⅜″ and No.4 sieves	2
All aggregate passing No. 8 sieve	15
All aggregate passing No. 200 sieve	20
Asphalt binder	40
Air Voids (V_a)	20

5-04.3(9)B6 Mixture Statistical Evaluation – Price Adjustments

For each HMA mixture lot, a Job Mix Compliance Price Adjustment will be determined and applied, as follows:

$$JMCPA = [0.60 \times (CPF - 1.00)] \times Q \times UP$$

Where

JMCPA = Job Mix Compliance Price Adjustment for a given lot of mixture ($)
CPF = Composite Pay factor for a given lot of mixture (maximum is 1.05)
Q = Quantity in a given lot of mixture (tons)
UP = Unit price of the HMA in a given lot of mixture ($/ton)

5-04.3(9)B7 Mixture Statistical Evaluation – Retests

The Contractor may request that a mixture sublot be retested. To request a retest, submit a written request to the Contracting Agency within 7 calendar days after the specific test results have been posted to the website or emailed to the Contractor, whichever occurs first. The Contracting Agency will send a split of the original acceptance sample for testing by the Contracting Agency to either the Region Materials Laboratory or the State Materials Laboratory as determined

by the Engineer. The Contracting Agency will not test the split of the sample with the same equipment or by the same tester that ran the original acceptance test. The sample will be tested for a complete gradation analysis, asphalt binder content, and V_a, and the results of the retest will be used for the acceptance of the HMA mixture in place of the original mixture sublot sample test results. The cost of testing will be deducted from any monies due or that may come due the Contractor under the Contract at the rate of $250 per sample.

5-04.3(9)C Mixture Acceptance – Nonstatistical Evaluation

5-04.3(9)C1 Mixture Nonstatistical Evaluation – Lots, Sublots, Sampling, Test Section, Testing, Retests

For HMA mixture accepted by Nonstatistical Evaluation, comply with the requirements in Table 13:

Table 13

Nonstatistical Evaluation Lots, Sublots, Sampling, Test Section, Testing, Retests		
Comply with the Specifications Below		Comply with the Requirements of the Section for:
Lots and Sublots	Section 5-04.3(9)B1	Statistical Evaluation
Sampling	Section 5-04.3(9)B2	Statistical Evaluation
Acceptance Tests	Section 5-04.3(9)B3	Statistical Evaluation
Retests	Section 5-04.3(9)B7	Statistical Evaluation

5-04.3(9)C2 Mixture Nonstatistical Evaluation - Acceptance

Each mixture lot of HMA produced under Nonstatistical Evaluation, for which all sublot acceptance test results (required by Table 13) fall within the Job Mix Formula Tolerances for Nonstatistical Evaluation in Section 9-03.8(7), will be accepted at the unit Contract price with no further evaluation.

5-04.3(9)C3 Mixture Nonstatistical Evaluation – Out of Tolerance Procedures

Each mixture lot of HMA produced under Nonstatistical Evaluation, for which any sublot acceptance test result (required by Table 13) falls outside of the Job Mix Formula Tolerances for Nonstatistical Evaluation in Section 9-03.8(7), shall be evaluated in accordance with Section 1-06.2 and Table 14 to determine a Job Mix Compliance Price Adjustment.

Table 14

Nonstatistical Evaluation – Out of Tolerance Procedures	
Comply with the Following[1]	
Pay Factors[2]	Section 5-04.3(9)B4
Composite Pay Factors[3]	Section 5-04.3(9)B5
Price Adjustments	Section 5-04.3(9)B6

[1]When less than three mixture sublots exist, backup samples of the existing mixture sublots shall be tested to provide a minimum

of three sets of results for evaluation. If enough backup samples are not available, the Contracting Agency will select core sample locations from the Roadway in accordance with WSDOT Test Method T 716, take cores from the roadway in accordance with WSDOT SOP 734, and test the cores in accordance with WSDOT SOP 737.

[2]The Nonstatistical Evaluation tolerance limits in Section 9-03.8(7) will be used in the calculation of the PF_i.

[3]The maximum CPF shall be 1.00.

5-04.3(9)D Mixture Acceptance – Visual Evaluation

Visual Evaluation of HMA mixture will be by visual inspection by the Engineer or, in the sole discretion of the Engineer, the Engineer may sample and test the mixture.

5-04.3(9)D1 Mixture Visual Evaluation – Lots, Sampling, Testing, Price Adjustments

HMA mixture accepted by Visual Evaluation will not be broken into lots unless the Engineer determines that testing is required. When that occurs, the Engineer will identify the limits of the questionable HMA mixture, and that questionable HMA mixture shall constitute a lot. Then, the Contractor will take samples from the truck, or the Engineer will take core samples from the roadway at a minimum of three random locations from within the lot, selected in accordance with WSDOT Test Method T 716, taken from the roadway in accordance with WSDOT SOP 734, and tested in accordance with WSDOT SOP 737. The Engineer will test one of the samples for all constituents in Section 5-04.3(9)B3. If all constituents from that test fall within the Job Mix Formula Tolerances (for Visual Evaluation) in Section 9-03.8(7), the lot will be accepted at the unit Contract price with no further evaluation.

When one or more constituents fall outside those tolerance limits, the other samples will be tested for all constituents in Section 5-04.3(9)B3, and a Job Mix Compliance Price Adjustment will be calculated in accordance with Table 15.

Table 15

Visual Evaluation – Out of Tolerance Procedures	
Comply with the Following	
Pay Factors[1]	Section 5-04.3(9)B4
Composite Pay Factors[2]	Section 5-04.3(9)B5
Price Adjustments	Section 5-04.3(9)B6

[1]The Visual Evaluation tolerance limits in Section 9-03.8(7) will be used in the calculation of the PF_i.

[2]The maximum CPF shall be 1.00.

5-04.3(9)E Mixture Acceptance – Notification of Acceptance Test Results

The results of all mixture acceptance testing and the Composite Pay Factor (CPF) of the lot after three sublots have been tested will be available to the Contractor through The Contracting Agency's website.

The Contracting Agency will endeavor to provide written notification (via email to the Contractor's designee) of acceptance test results through its web-based materials testing system Statistical Analysis of Materials (SAM) within 24 hours of the sample being made available to the Contracting Agency. However, the Contractor agrees:

1. Quality control, defined as the system used by the Contractor to monitor, assess, and adjust its production processes to ensure that the final HMA mixture will meet the specified level of quality, is the sole responsibility of the Contractor.

2. The Contractor has no right to rely on any testing performed by the Contracting Agency, nor does the Contractor have any right to rely on timely notification by the Contracting Agency of the Contracting Agency's test results (or statistical analysis thereof), for any part of quality control and/or for making changes or correction to any aspect of the HMA mixture.

3. The Contractor shall make no claim for untimely notification by the Contracting Agency of the Contracting Agency's test results or statistical analysis.

5-04.3(10) HMA Compaction Acceptance

For all HMA, the Contractor shall comply with the General Compaction Requirements in Section 5-04.3(10)A. The Contracting Agency will evaluate all HMA for compaction compliance with one of the following - Statistical Evaluation, Visual Evaluation, or Test Point Evaluation - determined by the criteria in Table 16:

Table 16

Criteria for Determining Method of Evaluation for HMA Compaction[1]		
Statistical Evaluation of HMA Compaction is Required For:	**Visual Evaluation of HMA Compaction is Required For:**	**Test Point Evaluation of HMA Compaction is Required For:**
• Any HMA for which the specified course thickness is greater than 0.10 feet, and the HMA is in: ○ traffic lanes, including but not limited to: • ramp lanes • truck climbing lanes • weaving lanes • speed change lanes	• "HMA for Preleveling…" • "HMA for Pavement Repair…"	• Any HMA not meeting the criteria for Statistical Evaluation or Visual Evaluation

[1]This table applies to all HMA, and shall be the sole basis for determining the acceptance method for compaction.

The Contracting Agency may, at its sole discretion, evaluate any HMA for compliance with the Cyclic Density requirements of Section 5-04.3(10)B.

5-04.3(10)A HMA Compaction – General Compaction Requirements

Immediately after the HMA has been spread and struck off, and after surface irregularities have been adjusted, thoroughly and uniformly compact the mix. The completed course shall be free from ridges, ruts, humps, depressions, objectionable marks, and irregularities and shall conform to the line, grade, and cross-section shown in the Plans. If necessary, alter the JMF in accordance with Section 9-03.8(7) to achieve desired results.

Compact the mix when it is in the proper condition so that no undue displacement, cracking, or shoving occurs. Compact areas inaccessible to large compaction equipment by mechanical or hand tampers. Remove HMA that becomes loose, broken, contaminated, shows an excess or deficiency of asphalt, or is in any way defective. Replace the removed material with new HMA, and compact it immediately to conform to the surrounding area.

The type of rollers to be used and their relative position in the compaction sequence shall generally be the Contractor's option, provided the specified densities are attained. An exception shall be that pneumatic tired rollers shall be used for compaction of the wearing course beginning October 1st of any year through March 31st of the following year. Coverage with a steel wheel roller may precede pneumatic tired rolling. Unless otherwise approved by the Engineer, operate rollers in the static mode when the internal temperature of the mix is less than 175°F. Regardless of mix temperature, do not operate a roller in a mode that results in checking or cracking of the mat.

On bridge decks and on the five feet of roadway approach immediately adjacent to the end of bridge/back of pavement seat, operate rollers in static mode only.

5-04.3(10)B HMA Compaction – Cyclic Density

Low cyclic density areas are defined as spots or streaks in the pavement that are less than 90 percent of the theoretical maximum density. At the Engineer's discretion, the Engineer may evaluate the HMA pavement for low cyclic density, and when doing so will follow WSDOT SOP 733. A $500 Cyclic Density Price Adjustment will be assessed for any 500-foot section with two or more density readings below 90 percent of the theoretical maximum density.

5-04.3(10)C HMA Compaction Acceptance – Statistical Evaluation

HMA compaction which is accepted by Statistical Evaluation will be based on acceptance testing performed by the Contracting Agency, and statistical analysis of those acceptance tests results. This will result in a Compaction Price Adjustment.

5-04.3(10)C1 HMA Compaction Statistical Evaluation – Lots and Sublots

HMA compaction which is accepted by Statistical Evaluation will be evaluated by the Contracting Agency dividing the project into compaction lots, and each compaction lot will be evaluated using stratified random sampling by the Contracting Agency sub-dividing each compaction lot into compaction sublots. All mixture in any individual compaction lot shall be of the same mix design. The compaction sublots will be numbered in the order in which the mixture (of a particular mix design) is paved.

Each compaction lot comprises a maximum of 15 compaction sublots, except for the final compaction lot of each mix design on the Contract, which comprises a maximum of 25 sublots.

Each compaction sublot shall be uniform in size as shown in Table 17, except that the last compaction sublot of each day may be increased to a maximum of two times the compaction sublot quantity calculated. Minor variations in the size of any sublot shall not be cause to invalidate the associated test result.

Table 17

HMA Compaction Sublot Size	
HMA Original Plan Quantity (tons)[1]	Compaction Sublot Size (tons)
<20,000	100
20,000 to 30,000	150
>30,000	200

[1] In determining the plan quantity tonnage, do not include any tons accepted by test point evaluation.

The following will cause one compaction lot to end prematurely and a new compaction lot to begin:

- For a compaction lot in progress with a compaction CPF less than 0.75, a new compaction lot will begin at the Contractor's request after the Engineer is satisfied that material conforming to the Specifications can be produced. See also Section 5-04.3(11)F.

5-04.3(10)C2 HMA Compaction Statistical Evaluation – Acceptance Testing

Comply with Section 1-06.2(1).

The location of HMA compaction acceptance tests will be randomly selected by the Contracting Agency from within each sublot, with one test per sublot. The Contracting Agency will determine the random sample location using WSDOT Test Method T 716.

Use Table 18 to determine compaction acceptance test procedures and to allocate compaction acceptance sampling and testing responsibilities between the Contractor and the Contracting Agency.

Roadway cores shall be taken or nuclear density testing shall occur after completion of the finish rolling, prior to opening to traffic, and on the same day that the mix is placed.

Table 18

HMA Compaction Acceptance Testing Procedures and Responsibilities			
	When Contract Includes Bid Item “Roadway Cores”	When Contract Does Not Include Bid Item “Roadway Cores”	
Basis for Test:	Roadway Cores	Roadway Cores[3]	Nuclear Density Gauge[3]
In-Place Density Determined by:	Contractor shall take cores[1] using WSDOT SOP 734[2] Contracting Agency will determine core density using FOP for AASHTO T 166	Contracting Agency will take cores[1] using WSDOT SOP 734 Contracting Agency will determine core density using FOP for AASHTO T 166	Contracting Agency, using FOP for WAQTC TM 8
Theoretical Maximum Density Determined by:	Contracting Agency, using FOP for AASHTO T 209		
Rolling Average of Theoretical Maximum Densities Determined by:	Contracting Agency, using WSDOT SOP 729		
Percent Compaction in Each Sublot Determined by:	Contracting Agency, using WSDOT SOP 736	Contracting Agency, using WSDOT SOP 736	Contracting Agency, using FOP for WAQTC TM 8

[1]The core diameter shall be 4-inches unless otherwise approved by the Engineer.

[2]The Contractor shall take the core samples in the presence of the Engineer, at locations designated by the Engineer, and deliver the core samples to the Contracting Agency.

[3]The Contracting Agency will determine, in its sole discretion, whether it will take cores or use the nuclear density gauge to determine in-place density. Exclusive reliance on cores for density acceptance is generally intended for small paving projects and is not intended as a replacement for nuclear gauge density testing on typical projects.

When using the nuclear density gauge for acceptance testing of pavement density, the Engineer will follow WSDOT SOP 730 for correlating the nuclear gauge with HMA cores. When cores are required for the correlation, coring and testing will be by the Contracting Agency. When a core is taken for gauge correlation at the location of a sublot, the relative density of the core will be used for the sublot test result and is exempt from retesting.

5-04.3(10)C3 HMA Statistical Compaction – Price Adjustments

For each HMA compaction lot (that is accepted by Statistical Evaluation) which has less than three compaction sublots, for which all compaction sublots attain a minimum of 91 percent compaction determined in accordance with FOP for WAQTC TM 8 (or WSDOT SOP 736 when provided by the Contract), the HMA will be accepted at the unit Contract price with no further evaluation.

For each HMA compaction lot (that is accepted by Statistical Evaluation) which does not meet the criteria in the preceding paragraph, the compaction lot shall be evaluated in accordance with Section 1-06.2(2) to determine the appropriate Compaction Price Adjustment (CPA). All of the test results obtained from the acceptance samples from a given compaction lot shall be evaluated collectively. Additional testing by either a nuclear density gauge or cores will be completed as required to provide a minimum of three tests for evaluation.

For the statistical analysis in Section 1-06.2, use the following values:

x = Percent compaction of each sublot
USL = 100
LSL= 91

Each CPA will be determined as follows:

$$CPA = [0.40 \times (CPF - 1.00)] \times Q \times UP$$

Where

CPA = Compaction Price Adjustment for the compaction lot ($)
CPF = Composite Pay Factor for the compaction lot (maximum is 1.05)
Q = Quantity in the compaction lot (tons)
UP = Unit price of the HMA in the compaction lot ($/ton)

5-04.3(10)C4 HMA Statistical Compaction – Requests for Retesting

For a compaction sublot that has been tested with a nuclear density gauge that did not meet the minimum of 91 percent of the theoretical maximum density in a compaction lot with a CPF below 1.00 and thus subject to a price reduction or rejection, the Contractor may request that a core, taken at the same location as the nuclear density test, be

used for determination of the relative density of the compaction sublot. The relative density of the core will replace the relative density determined by the nuclear density gauge for the compaction sublot and will be used for calculation of the CPF and acceptance of HMA compaction lot. When cores are taken by the Contracting Agency at the request of the Contractor, they shall be requested by noon of the next workday after the test results for the compaction sublot have been provided or made available to the Contractor. Traffic control shall be provided by the Contractor as requested by the Engineer. Failure by the Contractor to provide the requested traffic control will result in forfeiture of the request for retesting. When the CPF for the compaction lot based on the results of the cores is less than 1.00, the Contracting Agency will deduct the cost for the coring from any monies due or that may become due the Contractor under the Contract at the rate of $200 per core and the Contractor shall pay for the cost of the traffic control.

5-04.3(10)D HMA Compaction – Visual Evaluation

Visual Evaluation will be the basis of acceptance for compaction of the Bid items "HMA for Pavement Repair Cl. ___ PG ___"and "HMA for Prelevelling Class___ PG___". This HMA shall be thoroughly compacted to the satisfaction of the Engineer. HMA that is used to prelevel wheel ruts shall be compacted with a pneumatic tire roller.

5-04.3(10)E HMA Compaction – Test Point Evaluation

When compaction acceptance is by Test Point Evaluation, compact HMA based on a test point evaluation of the compaction train. Perform the test point evaluation in accordance with instructions from the Engineer. The number of passes with an approved compaction train, required to attain the maximum test point density, shall be used on all subsequent paving.

5-04.3(10)F HMA Compaction Acceptance – Notification of Acceptance Test Results

The obligations and responsibilities for notifying the Contractor of compaction acceptance test results are the same as for mixture acceptance test results. See Section 5-04.3(9)E.

5-04.3(11) Reject Work

This Section applies to HMA and all requirements related to HMA (except aggregates prior to being incorporated into HMA). For rejection of aggregate prior to its incorporation into HMA refer to Section 3-04.

5-04.3(11)A Reject Work – General

Work that is defective or does not conform to Contract requirements shall be rejected. The Contractor may propose, in writing, alternatives to removal and replacement of rejected material. Acceptability of such alternative proposals will be determined at the sole discretion of the Engineer.

5-04.3(11)B Rejection by Contractor

The Contractor may, prior to acceptance sampling and testing, elect to remove any defective material and replace it with new material. Any such new material will be sampled, tested, and evaluated for acceptance.

5-04.3(11)C Rejection Without Testing (Mixture or Compaction)

The Engineer may, without sampling, reject any batch, load, or section of Roadway that appears defective. Material rejected before placement shall not be incorporated into the pavement.

No payment will be made for the rejected materials or the removal of the materials unless the Contractor requests the rejected material to be tested. If the Contractor requests testing, acceptance will be by Statistical Evaluation, and a minimum of three samples will be obtained and tested. When uncompacted material is required for testing but not available, the Engineer will determine random sample locations on the roadway in accordance with WSDOT Test Method T 716, take cores in accordance with WSDOT SOP 734, and test the cores in accordance with WSDOT SOP 737.

If the CPF for the rejected material is less than 0.75, no payment will be made for the rejected material; in addition, the cost of sampling and testing shall be borne by the Contractor. If the CPF is greater than or equal to 0.75, the cost of sampling and testing will be borne by the Contracting Agency. If the material is rejected before placement and the CPF is greater than or equal to 0.75, compensation for the rejected material will be at a CPF of 0.75. If rejection occurs after placement and the CPF is greater than or equal to 0.75, compensation for the rejected material will be at the calculated CPF with an addition of 25 percent of the unit Contract price added for the cost of removal and disposal.

5-04.3(11)D Rejection – A Partial Sublot (Mixture or Compaction)

In addition to the random acceptance sampling and testing, the Engineer may also isolate from a mixture or compaction sublot any material that is suspected of being defective in relative density, gradation or asphalt binder content. Such isolated material will not include an original sample location. The Contracting Agency will obtain a minimum of three random samples of the suspect material and perform the testing. When uncompacted material is required for testing but is not available, the Engineer will select random sample locations on the roadway in accordance with WSDOT Test Method T 716, take cores samples in accordance with WSDOT SOP 734, and test the material in accordance with WSDOT SOP 737. The material will then be statistically evaluated as an independent lot in accordance with Section 1-06.2(2).

5-04.3(11)E Rejection – An Entire Sublot (Mixture or Compaction)

An entire mixture or compaction sublot that is suspected of being defective may be rejected. When this occurs, a minimum of two additional random samples from this sublot will be obtained. When uncompacted material is required for the additional samples but the material has been compacted, the Contracting Agency will take and test cores from the roadway as described in Section 5-04.3(11)D. The additional samples and the original

sublot will be evaluated as an independent lot in accordance with Section 1-06.2(2).

5-04.3(11)F Rejection - A Lot in Progress (Mixture or Compaction)
The Contractor shall shut down operations and shall not resume HMA placement until such time as the Engineer is satisfied that material conforming to the Specifications can be produced when:

1. the Composite Pay Factor (CPF) of a mixture or compaction lot in progress drops below 1.00 and the Contractor is taking no corrective action, or

2. the Pay Factor (PF_i) for any constituent of a mixture or compaction lot in progress drops below 0.95 and the Contractor is taking no corrective action, or

3. either the PF_i for any constituent (or the CPF) of a mixture or compaction lot in progress is less than 0.75.

5-04.3(11)G Rejection – An Entire Lot (Mixture or Compaction)
An entire lot with a CPF of less than 0.75 will be rejected.

5-04.3(12) Joints

5-04.3(12)A HMA Joints

5-04.3(12)A1 Transverse Joints
Conduct operations such that placement of the top or wearing course is a continuous operation or as close to continuous as possible. Unscheduled transverse joints will be allowed, but the roller may pass over the unprotected end of the freshly laid HMA only when the placement of the course is discontinued for such a length of time that the HMA will cool below compaction temperature. When the Work is resumed, cut back the previously compacted HMA to produce a slightly beveled edge for the full thickness of the course.

Construct a temporary wedge of HMA on a 50H:1V where a transverse joint as a result of paving or planing is open to traffic. Separate the HMA in the temporary wedge from the permanent HMA upon which it is placed by strips of heavy wrapping paper or other methods approved by the Engineer. Remove the wrapping paper and trim the joint to a slightly beveled edge for the full thickness of the course prior to resumption of paving.

Waste the material that is cut away and place new HMA against the cut. Use rollers or tamping irons to seal the joint.

5-04.3(12)A2 Longitudinal Joints
Offset the longitudinal joint in any one course from the course immediately below by not more than 6 inches nor less than 2 inches. Locate all longitudinal joints constructed in the wearing course at a lane line or an edge line of the Traveled Way. Construct a notched wedge joint along all longitudinal joints in the wearing surface of new HMA unless otherwise approved by the Engineer. The notched

wedge joint shall have a vertical edge of not less than the maximum aggregate size nor more than ½ of the compacted lift thickness, and then taper down on a slope not steeper than 4H:1V. Uniformly compact the sloped portion of the HMA notched wedge joint.

On one-lane ramps a longitudinal joint may be constructed at the center of the traffic lane, subject to approval by the Engineer, if:

1. The ramp must remain open to traffic, or

2. The ramp is closed to traffic and a hot-lap joint is constructed.

    a. Two paving machines shall be used to construct the hot-lap joint.

    b. The pavement within 6 inches of the hot-lap joint will not be excluded from random location selection for compaction testing.

    c. Construction equipment other than rollers shall not operate on any uncompacted HMA.

When HMA is placed adjacent to cement concrete pavement, construct longitudinal joints between the HMA and the cement concrete pavement. Saw the joint to the dimensions shown on Standard Plan A-40.10 and fill with joint sealant meeting the requirements of Section 9-04.2.

5-04.3(12)B Bridge Paving Joint Seals

5-04.3(12)B1 HMA Sawcut and Seal

Prior to placing HMA on the bridge deck, establish sawcut alignment points at both ends of the bridge paving joint sealsto be placed at the bridge ends, and at interior joints within the bridge deck when and where shown in the Plans. Establish the sawcut alignment points in a manner that they remain functional for use in aligning the sawcut after placing the HMA overlay.

Submit a Type 1 Working Drawing consisting of the sealant manufacturer's application procedure.

Construct the bridge paving joint seal as specified in the Plans and in accordance with the detail shown in the Standard Plans. Construct the sawcut in accordance with Section 5-05.3(8). Apply the sealant in accordance with Section 5-05.3(8)B and the manufacturer's application procedure.

5-04.3(12)B2 Paved Panel Joint Seal

Construct the paved panel joint seal in accordance with the requirements specified in Section 5-04.3(12)B1 and the following requirement:

1. Clean and seal the existing joint between concrete panels in accordance with Section 5-01.3(8) and the details shown in the Standard Plans.

5-04.3(13) Surface Smoothness

The completed surface of all courses shall be of uniform texture, smooth, uniform as to crown and grade, and free from defects of all kinds. The completed surface of the wearing course shall not vary more than ⅛ inch from the lower edge of a 10-foot straightedge placed on the surface parallel to the centerline. The transverse slope of the completed surface of the wearing course shall vary not more than ¼ inch in 10 feet from the rate of transverse slope shown in the Plans.

When deviations in excess of the above tolerances are found that result from a high place in the HMA, correct the pavement surface by one of the following methods:

1. Remove material from high places by grinding with an approved grinding machine, or

2. Remove and replace the wearing course of HMA, or

3. By other method approved by the Engineer.

Correct defects until there are no deviations anywhere greater than the allowable tolerances.

Deviations in excess of the above tolerances that result from a low place in the HMA and deviations resulting from a high place where corrective action, in the opinion of the Engineer, will not produce satisfactory results will be accepted with a price adjustment. The Engineer shall deduct from monies due or that may become due to the Contractor the sum of $500.00 for each and every section of single traffic lane 100 feet in length in which any excessive deviations described above are found.

When portland cement concrete pavement is to be placed on HMA, the surface tolerance of the HMA shall be such that no surface elevation lies above the Plan grade minus the specified Plan depth of portland cement concrete pavement. Prior to placing the portland cement concrete pavement, bring any such irregularities to the required tolerance by grinding or other means approved by the Engineer.

When utility appurtenances such as manhole covers and valve boxes are located in the Traveled Way, pave the Roadway before the utility appurtenances are adjusted to the finished grade.

5-04.3(14) Planing Bituminous Pavement

Plane in such a manner that the underlying pavement is not torn, broken, or otherwise damaged by the planing operation. Delamination or raveling of the underlying pavement will not be construed as damage due to the Contractor's operations. Pavement outside the limits shown in the Plans or designated by the Engineer that is damaged by the Contractor's operations shall be repaired

to the satisfaction of the Engineer at no additional cost to the Contracting Agency.

For mainline planing operations, use equipment with automatic controls and with sensors for either or both sides of the equipment. The controls shall be capable of sensing the grade from an outside reference line, or a mat-referencing device. The automatic controls shall have a transverse slope controller capable of maintaining the mandrel at the desired transverse slope (expressed as a percentage) within plus or minus 0.1 percent.

Remove all loose debris from the planed surface before opening the planed surface to traffic. The planings and other debris resulting from the planing operation shall become the property of the Contractor and be disposed of in accordance with Section 2-03.3(7)C, or as otherwise allowed by the Contract.

5-04.3(15) Sealing Pavement Surfaces

Apply a fog seal where shown in the Plans. Construct the fog seal in accordance with Section 5-02.3. Unless otherwise approved by the Engineer, apply the fog seal prior to opening to traffic.

5-04.3(16) HMA Road Approaches

Construct HMA approaches at the locations shown in the Plans or where staked by the Engineer, in accordance with Section 5-04.

5-04.4 Measurement

HMA Cl. ___ PG ___, HMA for ___ Cl. ___ PG ___, and Commercial HMA will be measured by the ton in accordance with Section 1-09.2, with no deduction being made for the weight of asphalt binder, mineral filler, or any other component of the HMA. If the Contractor elects to remove and replace HMA as allowed by Section 5-04.3(11), the material removed will not be measured.

Roadway cores will be measured per each for the number of cores taken.

Crack Sealing-LF will be measured by the linear foot along the line of the crack.

Soil residual herbicide will be measured by the mile for the stated width to the nearest 0.01 mile or by the square yard, whichever is designated in the Proposal.

Pavement repair excavation will be measured by the square yard of surface marked prior to excavation.

Asphalt for fog seal will be measured by the ton, as provided in Section 5-02.4.

Longitudinal joint seals between the HMA and cement concrete pavement will be measured by the linear foot along the line and slope of the completed joint seal.

HMA sawcut and seal, and paved panel joint seal, will be measured by the linear foot along the line and slope of the completed joint seal.

Planing bituminous pavement will be measured by the square yard.

Temporary pavement marking will be measured by the linear foot as provided in Section 8-23.4.

Water will be measured by the M gallon as provided in Section 2-07.4.

5-04.5 Payment

Payment will be made for each of the following Bid items that are included in the Proposal:

"HMA Cl. ___ PG ___", per ton.
"HMA for Approach Cl. ___ PG ___", per ton.
"HMA for Preleveling Cl. ___ PG ___", per ton.
"HMA for Pavement Repair Cl. ___ PG ___", per ton.
"Commercial HMA", per ton.
The unit Contract price per ton for "HMA Cl. ___ PG ___", "HMA for Approach Cl. ___ PG ___", "HMA for Preleveling Cl. ___ PG ___", "HMA for Pavement Repair Cl. ___ PG ___", and "Commercial HMA" shall be full compensation for all costs, including anti-stripping additive, incurred to carry out the requirements of Section 5-04 except for those costs included in other items which are included in this Subsection and which are included in the Proposal.

"Crack Sealing-FA", by force account.
"Crack Sealing-FA" will be paid for by force account as specified in Section 1-09.6. For the purpose of providing a common Proposal for all Bidders, the Contracting Agency has entered an amount in the Proposal to become a part of the total Bid by the Contractor.

"Crack Sealing-LF", per linear foot.
The unit Contract price per linear foot for "Crack Sealing-LF" shall be full payment for all costs incurred to perform the Work described in Section 5-04.3(4)A.

"Soil Residual Herbicide ____ ft. Wide", per mile, or
"Soil Residual Herbicide", per square yard.
The unit Contract price per mile or per square yard for "Soil Residual Herbicide" shall be full payment for all costs incurred to obtain, provide and install herbicide in accordance with Section 5-04.3(4)B.

"Pavement Repair Excavation Incl. Haul", per square yard.
The unit Contract price per square yard for "Pavement Repair Excavation Incl. Haul" shall be full payment for all costs incurred to perform the Work described in Section 5-04.3(4)C with the exception, however, that all costs involved in the placement of HMA shall be included in the unit Contract price per ton for "HMA for Pavement Repair Cl. ___ PG ___", per ton.

"Asphalt for Fog Seal", per ton.
Payment for "Asphalt for Fog Seal" is described in Section 5-02.5.

"Longitudinal Joint Seal", per linear foot.
The unit Contract price per linear foot for "Longitudinal Joint Seal" shall be full payment for all costs incurred to construct the longitudinal joint between HMA and cement concrete pavement, as described in Section 5-04.3(12)B.

"HMA Sawcut And Seal", per linear foot.
The unit Contract price per linear foot for "HMA Sawcut And Seal" shall be full payment for all costs incurred to perform the Work described in Section 5-04.3(12)B1.

"Paved Panel Joint Seal", per linear foot.
The unit Contract price per linear foot for "Paved Panel Joint Seal" shall be full payment for all costs incurred to perform the Work described in Section 5-04.3(12)B2.

"Planing Bituminous Pavement", per square yard.
The unit Contract price per square yard for "Planing Bituminous Pavement" shall be full payment for all costs incurred to perform the Work described in Section 5-04.3(14).

"Temporary Pavement Marking", per linear foot.
Payment for "Temporary Pavement Marking" is described in Section 8-23.5.

"Water", per M gallon.
Payment for "Water" is described in Section 2-07.5.

"Job Mix Compliance Price Adjustment", by calculation.
"Job Mix Compliance Price Adjustment" will be calculated and paid for as described in Section 5-04.3(9)B6, 5-04.3(9)C3, and 5-04.3(9)D1.

"Compaction Price Adjustment", by calculation.
"Compaction Price Adjustment" will be calculated and paid for as described in Section 5-04.3(10)C3.

"Roadway Core", per each.
The Contractor's costs for all other Work associated with the coring (e.g., traffic control) shall be incidental and included within the unit Bid price per each and no additional payments will be made.

"Cyclic Density Price Adjustment", by calculation.
"Cyclic Density Price Adjustment" will be calculated and paid for as described in Section 5-04.3(10)B.

5-05.AP5

Section 5-05, Cement Concrete Pavement
August 1, 2016

5-05.3(3)B Mixing Equipment

The last sentence of item number 4 is revised to read:

Plant-mixed concrete may be transported in nonagitated vehicles provided that the concrete is in a workable condition when placed and:

a. discharge is completed within 45 minutes after the introduction of mixing water to the cement and aggregates, or

b. discharge is completed within 60 minutes after the introduction of mixing water to the cement and aggregates, provided the concrete mix temperature is 70 F or below during placement, or

c. discharge is completed within 60 minutes after the introduction of mixing water to the cement and aggregates, provided the mix contains an approved set retarder at the manufacturer's minimum dosage rate.

5-05.3(6) Subgrade

This section, including title, is revised to read:

5-05.3(6) Surface Preparation

The Subgrade surface shall be prepared and compacted a minimum of 3 feet beyond each edge of the area which is to receive concrete pavement in order to accommodate the slip-form equipment.

Concrete shall not be placed during a heavy rainfall. Prior to placing concrete:

1. The surface shall be moist;

2. Excess water (e.g., standing, pooling or flowing) shall be removed from the surface.

3. The surface shall be clean and free of any deleterious materials.

4. The surface temperature shall not exceed 120°F or be frozen.

5-05.3(7)A Slip-Form Construction

The second sentence of the first paragraph is revised to read:

The alignment and elevation of the paver shall be regulated from outside reference lines established for this purpose, or by an electronic control system capable of controlling the line and grade within required tolerances.

6-02.AP6

Section 6-02, Concrete Structures
August 1, 2016

6-02.3(2)A Contractor Mix Design

The following new sentence is inserted after the first sentence of the third paragraph:

The mix design submittal shall also include test results no older than one year showing that the Aggregates do not contain Deleterious Substances in accordance with Section 9-03.

6-02.3(2)A1 Contractor Mix Design for Concrete Class 4000D

The following new sentence is inserted after the second sentence of the last paragraph:

Mix designs using shrinkage reducing admixture shall state the specific quantity required.

The following new sentence is inserted before the last sentence of the last paragraph:

Testing samples of mixes using shrinkage reducing admixture shall use the admixture amount specified in the mix design submittal.

6-02.3(2)B Commercial Concrete

The last sentence of the first paragraph is revised to read:

Commercial concrete does not require mix design or source approvals for cement, aggregate, and other admixtures.

6-02.3(6)A1 Hot Weather Protection

This section is revised to read:

The Contractor shall provide concrete within the specified temperature limits. Cooling of the coarse aggregate piles by sprinkling with water is permitted provided the moisture content is monitored and the mixing water is adjusted for the free water in the aggregate. Shading or cooling aggregate piles (sprinkling of fine aggregate piles with water is not allowed). If sprinkling of the coarse aggregates is to be used, the piles moisture content shall be monitored and the mixing water adjusted for the free water in the aggregate. In addition, when removing the coarse aggregate, it shall be removed from at least 1 foot above the bottom of the pile. Refrigerating mixing water; or replacing all or part of the mixing water with crushed ice, provided the ice is completely melted by placing time.

If air temperature exceeds 90°F, the Contractor shall use water spray or other accepted methods to cool all concrete-contact surfaces to less than 90°F. These surfaces include forms, reinforcing steel, steel beam flanges, and any others that touch the mix.

6-02.3(6)A2 Cold Weather Protection

This section is revised to read:

Concrete shall be maintained at or above a temperature of 40°F during the first seven days of the Cold Weather Protection Period and at or above a temperature of 35°F during the remainder of the Cold Weather Protection Period. Cold weather protection requirements do not apply to concrete placed below the ground line.

Prior to placing concrete in cold weather, the Contractor shall submit a Type 2 Working Drawing with a written procedure for cold weather concreting. The procedure shall detail how the Contractor will adequately cure the concrete and prevent the concrete temperature from falling below the minimum temperature. Extra protection shall be provided for areas especially vulnerable to freezing (such as exposed top surfaces, corners and edges, thin sections, and concrete placed into steel forms). Concrete placement will only be allowed if the Contractor's cold weather protection plan has been accepted by the Engineer.

Prior to concrete placement, the Contractor shall review the 7-day temperature predictions for the job site from the Western Region Headquarters of the National Weather Service (www.wrh.noaa.gov). When temperatures below 35°F are predicted, the Contractor shall:

1. Install temperature data loggers in each concrete pour. One data logger shall be installed for every 100 yards of concrete placed. Data loggers shall be installed at locations directed by the Engineer, and shall be placed 1.5 inches from the face of concrete.

2. Immediately after concrete placement, temperature data loggers shall be installed on the concrete surface at locations directed by the Engineer. One data logger shall be installed for every 100 yards of concrete placed.

The data loggers shall be operated continuously during the Cold Weather Protection Period. Temperatures shall be measured, recorded and stored a minimum of every 30 minutes. Temperature date shall be submitted to the Engineer as a Type 1 Working Drawing within three days following the end of the Cold Weather Protection Period.

If the concrete temperature falls below 40°F during the first seven days of the Cold Weather Protection Period, no curing time is awarded for that day and the Cold Weather Protection Period is extended for one additional day. If the concrete temperature falls below 35°F during Cold Weather Protection Period, the concrete may be rejected by the Engineer.

6-02.3(17)N Removal of Falsework and Forms

The fifth paragraph is deleted.

6-02.3(25)J Horizontal Alignment

The last two sentences of the third paragraph are revised to read the following single sentence:

Any girder that exceeds on offset of $^{1}/_{8}$ inch for each 10 feet of girder length shall be corrected at the job site to the $^{1}/_{8}$ inch maximum offset per 10 feet of girder length before concrete is placed into the diaphragms.

6-02.3(26)D2 Test Block Dimensions

The first sentence is revised to read:

The dimensions of the test block perpendicular to the tendon in each direction shall be the smaller of twice the minimum edge distance or the minimum spacing specified by the special anchorage device manufacturer, with the stipulation that the concrete cover over any confining reinforcing steel or supplementary skin reinforcement shall be appropriate for the project-specific application and circumstances.

6-02.3(26)E2 Ducts for External Exposed Installation

In the first paragraph, “ASTM D3350” is revised to read “ASTM D3035”.

In the fourth paragraph, "ASTM D3505" is revised to read "ASTM D3035".

6-02.3(26)G Tensioning

Item number 1 of the second paragraph is revised to read:

1. All concrete has reached a compressive strength of at least 4,000 psi or the strength specified in the Plans. When tensioning takes place prior to 28-day compressive strength testing on concrete sampled in accordance with Section 6-

02.3(25)H, compressive strength shall be verified on field cured cylinders in accordance with the FOP for AASHTO T23.

6-02.3(27)A Use of Self-Consolidating Concrete for Precast Units

Item number 2 of the first paragraph is revised to read:

2. Precast reinforced concrete three-sided structures, box culverts and split box culverts in accordance with Section 7-02.3(6).

6-05.AP6

Section 6-05, Piling
August 1, 2016

In this section, the words “capacity” and “capacities” are replaced with the words “resistance” and “resistances”, respectively.

6-05.3(1) Piling Terms

The third paragraph is revised to read:

Overdriving – Over-driving of piles occurs when the ultimate bearing resistance calculated from the equation in Section 6-05.3(12), or the wave equation driving criteria if applicable, exceeds the ultimate bearing resistance required in the Contract in order to reach the minimum tip elevation specified in the Contract, or as required by the Engineer.

The first sentence of the last paragraph is revised to read:

Minimum Tip Elevation – The minimum tip elevation is the elevation to which the pile tip shall be driven.

6-05.3(3)A Casting and Stressing

The last sentence of the third paragraph is revised to read:

If the corrective action is not acceptable to the Engineer, the piling(s) will be subject to rejection by the Engineer.

6-05.3(5) Manufacture of Steel Piles

This section is supplemented with the following new paragraph:

At least 14-days prior to the start of production of the piling, the Contractor shall advise the Engineer of the production schedule. The Contractor shall give the Inspector safe and free access to the Work. If the Inspector observes any nonspecification Work or unacceptable quality control practices, the Inspector will advise the plant manager. If the corrective action is not acceptable to the Engineer, the piling(s) will be subject to rejection by the Engineer.

6-05.3(9)A Pile Driving Equipment Approval

The first sentence of the second paragraph is revised to read:

The Contractor shall submit Type 2E Working Drawings consisting of a wave equation analysis for all pile driving systems used to drive piling with required maximum driving resistances of greater than 300 tons.

6-07.AP6

Section 6-07, Painting
August 1, 2016

6-07.3(10)F Collecting, Testing, and Disposal of Containment Waste

The third, fourth and fifth paragraphs are deleted and replaced with the following two new paragraphs:

Containment waste is defined as all paint chips and debris removed from the steel surface and all abrasive blast media, as contained by the containment system. After all waste from the containment system has been collected, the Contractor shall collect representative samples of the components that field screening indicates are lead-contaminated material. The Contractor shall collect at least one representative sample from each container. The Contractor may choose to collect a composite sample of each container, but the composite sample must consist of several collection points (a minimum of 3 random samples) that are representative of the entire contents of the container and representative of the characteristics of the type of waste in the container. In accordance with WAC 173–303-040, a representative sample means “a sample which can be expected to exhibit the average properties of the sample source.”

The debris shall be tested for metals using the Toxicity Characteristics Leaching Procedure (TCLP) and EPA Methods 1311 and 6010. At a minimum, the materials should be analyzed for the Resource Conservation and Recovery Act (RCRA) 8 Metals (arsenic, barium, cadmium, chromium, lead, mercury, selenium, and silver). Pursuant to the Dangerous Waste (DW) Regulations Chapter 173-303-90(8)(c) WAC, “Any waste that contains contaminants which occur at concentrations at or above the DW threshold must be designated as DW.” All material within each individual container or containment system that designates as DW shall be disposed of at a legally permitted Subtitle C Hazardous Waste Landfill. All material within each individual container or containment system that designate below the DW threshold, will be designated as “Solid Waste” and shall be disposed of at a legally permitted Subtitle D Landfill. Disposal shall be in accordance with WAC 173-303 for waste designated “Dangerous Waste” and pursuant to WAC 173-350 for waste designated as “Solid Waste”.

6-09.AP6

Section 6-09, Modified Concrete Overlays
April 4, 2016

6-09.3(8)A Quality Assurance for Microsilica Modified and Fly Ash Modified Concrete Overlays

The first sentence of the first paragraph is revised to read the following two new sentences:

The Engineer will perform slump, temperature, and entrained air tests for acceptance in accordance with Section 6-02.3(5)D and as specified in this Section after the Contractor has turned over the concrete for acceptance testing. Concrete samples for testing shall be supplied to the Engineer in accordance with Section 6-02.3(5)E.

The last paragraph is deleted.

6-09.3(8)B Quality Assurance for Latex Modified Concrete Overlays

The first two paragraphs are deleted and replaced with the following:

> The Engineer will perform slump, temperature, and entrained air tests for acceptance in accordance with Section 6-02.3(5)D and as specified in this Section after the Contractor has turned over the concrete for acceptance testing. The Engineer will perform testing as the concrete is being placed. Samples shall be taken on the first charge through each mobile mixer and every other charge thereafter. The sample shall be taken after the first 2 minutes of continuous mixer operation. Concrete samples for testing shall be supplied to the Engineer in accordance with Section 6-02.3(5)E.

The second to last sentence of the last paragraph is revised to read:

> Recommendations made by the technical representative on or off the jobsite shall be adhered to by the Contractor.

6-10.AP6

Section 6-10, Concrete Barrier
August 1, 2016

6-10.3(5) Temporary Concrete Barrier

This section title is revised to read:

> **Temporary Barrier**

The first paragraph is revised to read:

> For temporary barrier, the Contractor may use precast concrete barrier or temporary steel barrier. Temporary concrete barrier shall comply with Standard Plan requirements and cross-sectional dimensions, except that: (1) it may be made in other lengths than those shown in the Standard Plan, and (2) it may have permanent lifting holes no larger than 4 inches in diameter or lifting loops. Temporary steel barrier shall be certified that it meets NCHRP 350 or MASH crash test requirements and shall be installed in accordance with the manufacturer's recommendations.

6-10.4 Measurement

The first sentence of the second paragraph is revised to read:

> Temporary barrier will be measured by the linear foot along the completed line and slope of the barrier, one time only for each setup of barrier protected area.

6-10.5 Payment

The Bid item "Temporary Conc. Barrier", per linear foot, and the paragraph following this Bid item, is revised to read:

> "Temporary Barrier", per linear foot.

The unit Contract price per linear foot for “Temporary Barrier” shall be full pay for all costs, including furnishing, installing, connecting, anchoring, maintaining, temporary storage, and final removal of the temporary barrier.

6-14.AP6

Section 6-14, Geosynthetic Retaining Walls
January 4, 2016

6-14.5 Payment

The bid item “Concrete Fascia Panel”, per square foot, and the paragraph following this bid item are revised to read:

> “Concrete Fascia Panel For Geosynthetic Wall”, per square foot.
>
> All costs in connection with constructing the concrete fascia panels as specified shall be included in the unit Contract price per square foot for “Concrete Fascia Panel For Geosynthetic Wall”, including all steel reinforcing bars, premolded joint filler, polyethylene bond breaker strip, joint sealant, PVC pipe for weep holes, exterior surface finish, and pigmented sealer (when specified), constructing and placing the concrete footing, edge beam, anchor beam, anchor rod assembly, and backfill.

6-19.AP6

Section 6-19, Shafts
August 1, 2016

6-19.3 Construction Requirements

This section is supplemented with the following new subsection:

> **6-19.3(10) Engineer’s Final Acceptance of Shafts**
> The Engineer will determine final acceptance of each shaft, based on the nondestructive QA test results and analysis for the tested shafts, and will provide a response to the Contractor within 3 working days after receiving the test results and analysis submittal.

6-19.3(1)B Nondestructive Testing of Shafts

This section’s content is deleted and replaced with the following new subsections:

> **6-19.3(1)B1 Nondestructive Quality Assurance (QA) Testing of Shafts**
> Unless otherwise specified in the Special Provisions, the Contractor shall perform nondestructive QA testing of shafts, except for those constructed completely in the dry. Either crosshole sonic log (CSL) testing in accordance with ASTM D 6760 or thermal integrity profiling (TIP) testing in accordance with ASTM D 7949 shall be used.
>
> **6-19.3(1)B2 Nondestructive Quality Verification (QV) Testing of Shafts**
> The Contracting Agency may perform QV nondestructive testing of shafts that have been QA tested by the Contractor. The Contracting Agency may test up to ten percent of the shafts. The Engineer will identify the shafts selected for QV testing and the testing method the Contracting Agency will use.
>
> The Contractor shall accommodate the Contracting Agency’s nondestructive testing.

6-19.3(2) Shaft Construction Submittal

This section is revised to read:

The shaft construction submittal shall be comprised of the following four components: construction experience; shaft installation narrative; shaft slurry technical assistance; and nondestructive QA testing personnel. The submittals shall be Type 2 Working Drawings, except the shaft slurry technical assistance and nondestructive QA testing personnel submittals shall be Type 1.

This section is supplemented with the following new subsection:

6-19.3(2)D Nondestructive QA Testing Organization and Personnel

The Contractor shall submit the names of the testing organizations, and the names of the personnel who will conduct nondestructive QA testing of shafts. The submittal shall include documentation that the qualifications specified below are satisfied. For TIP testing, the testing organization is the group that performs the data analysis and produces the final report. The testing organizations and the testing personnel shall meet the following minimum qualifications:

1. The testing organization shall have performed nondestructive tests on a minimum of three deep foundation projects in the last two years.

2. Personnel conducting the tests for the testing organization shall have a minimum of one year experience in nondestructive testing and interpretation.

3. The experience requirements for the organization and personnel shall be consistent with the testing methods the Contractor has selected for nondestructive testing of shafts.

4. Personnel preparing test reports shall be a Professional Engineers, licensed under Title 18 RCW, State of Washington, and in accordance with WAC 196-23-020.

6-19.3(3) Shaft Excavation

The second paragraph is revised to read:

Shaft excavation shall not be started until the Contractor has received the Engineer acceptance for the reinforcing steel centralizers required when the casing is to be pulled during concrete placement.

This section is supplemented with the following:

Except as otherwise noted, the Contractor shall not commence subsequent shaft excavations until receiving the Engineer's acceptance of the first shaft, based on the results and analysis of the nondestructive testing for the first shaft. The Contractor may commence subsequent shaft excavations prior to receiving the Engineer's acceptance of the first shaft, provided the following condition is satisfied:

The Engineer permits continuing with shaft construction based on the Engineer's observations of the construction of the first shaft, including, but not limited to, conformance to the shaft installation narrative in accordance with Section 6-

19.3(2)B, and the Engineer's review of Contractor's daily reports and Inspector's daily logs concerning excavation, steel reinforcing bar placement, and concrete placement.

6-19.3(6) Access Tubes for Crosshole Sonic Log (CSL) Testing

This section title is revised to read:

6-19.3(6) Contractor Furnished Accessories for Nondestructive QA Testing

This section is supplemented with the following three new subsections:

6-19.3(6)D Shafts Requiring Thermal Wire

The Contractor shall furnish and install thermal wire in all shafts receiving the thermal wire method of TIP testing, except as otherwise noted in Section 6-19.3(1)B1.

6-19.3(6)E Thermal Wire and Thermal Access Points (TAPs)

The thermal wire and associated couplers shall be obtained from the source specified in the Special Provisions.

The Contractor shall securely attach the thermal wire to the interior of the reinforcement cage of the shaft in conformance with the supplier's instructions. At a minimum, one thermal wire shall be furnished and installed for each foot of shaft diameter, rounded to the nearest whole number, as shown in the Plans. The number of thermal wires for shaft diameters specified as "X feet 6 inches" shall be rounded up to the next higher whole number. The thermal wires shall be placed around the shaft, inside the spiral or hoop reinforcement, and tied to the vertical reinforcement with plastic "zip" ties at a maximum spacing of 2-feet. Steel tie wire shall not be used.

The thermal wire shall be installed in straight alignment and taut, but with enough slack to not be damaged during reinforcing cage lofting. The wires shall be as near to parallel to the vertical axis of the reinforcement cage as possible. The thermal wire shall extend from the bottom of the reinforcement cage to the top of the shaft, with 15-feet of slack wire provided above the top of shaft. Care shall be taken to prevent damaging the thermal wires during reinforcement cage installation and concrete placement operations in the shaft excavation.

After completing shaft reinforcement cage fabrication at the site and prior to installation of the cage into the shaft excavation, the Contractor shall install and connect thermal access points (TAPs) to the thermal wires. The TAPs shall record data for at least one hour after the cage is placed in the excavation to measure the slurry temperature and enable the steel and slurry temperatures to equilibrate prior to placing concrete in the shaft. The TAPs shall record and store data every 15 minutes. The TAPs shall remain active for a minimum of 36 hours.

Prior to beginning concrete placement the TAPs shall be checked to ensure they are recording data and that the wires have not been damaged. If a TAP unit is not functioning due to a damaged wire, the Contractor shall repair or replace the wire. If a TAP unit fails or a wire breaks after concrete placement has started, the Contractor shall not stop the concrete placement operation to repair the wire.

6-19.3(6)F Use of Access Tubes for TIP Testing Under the Thermal Probe Method
The Contractor may use access tubes for TIP testing under the thermal probe method. Access tubes shall be cared for in accordance with Section 6-19.3(6)C. Prior to TIP testing under the thermal probe method, the water in each tube shall be removed, collected, and stored in an insulated container. The access tube shall be blown dry and swabbed to remove residual water. After TIP testing, the collected and stored tube water shall be introduced back into the access tube. New potable water may be used, provided the water temperature is not more than 10°F cooler than the average concrete temperature measured by the probe.

6-19.3(6)A Shafts Requiring CSL Access Tubes

This section, including title, is revised to read:

6-19.3(6)A Shafts Requiring Access Tubes
The Contractor shall furnish and install access tubes in all shafts receiving CSL testing or the thermal probe method of TIP testing, except as otherwise noted in Section 6-19.3(1)B1.

6-19.3(6)B Orientation and Assembly of the CSL Access Tubes

This section's title is revised to read:

6-19.3(6)B Orientation and Assembly of the Access Tubes

6-19.3(6)C Care for CSL Access Tubes from Erection through CSL Testing

This section's title is revised to read:

6-19.3(6)C Care for Access Tubes from Erection Through Nondestructive QA Testing

The second sentence is revised to read:

The Contractor shall keep all of a shaft's access tubes full of water through the completion of nondestructive QA testing of that shaft.

6-19.3(7)I Requirements for Placing Concrete Above the Top of Shaft

This section is revised to read:

Concrete shall not be placed above the top of shaft (for column splice zones, columns, footings, or shaft caps) until the Contractor receives the Engineer's acceptance of nondestructive QA testing, if performed at that shaft, and acceptance of the shaft.

6-19.3(9) Nondestructive Testing of Shafts (Crosshole Sonic Log (CSL) Testing)

This section, including title, is revised to read:

6-19.3(9) Nondestructive QA Testing of Shafts
The Contractor shall provide nondestructive QA testing and analysis on all shafts with access tubes or thermal wires and TAPs facilitating the testing (See Section 6-19.3(1)B). The testing and analysis shall be performed by the testing organizations identified by the Contractor's submittal in accordance with Section 6-19.3(2)D.

The Engineer may direct that additional testing be performed at a shaft if anomalies or a soft bottom are detected by the Contractor's testing. If additional testing at a shaft confirms the presence of a defect(s) in the shaft, the testing costs and the delay costs resulting from the additional testing shall be borne by the Contractor in accordance with Section 1-05.6. If the additional testing indicates that the shaft has no defect, the testing costs and the delay costs resulting from the additional testing will be paid by the Contracting Agency in accordance with Section 1-05.6, and, if the shaft construction is on the critical path of the Contractor's schedule, a time extension equal to the delay created by the additional testing will be granted in accordance with Section 1-08.8.

6-19.3(9)A Schedule of CSL Testing

This section, including title, is revised to read:

6-19.3(9)A TIP Testing Using Thermal Probes or CSL Testing

If selected as the nondestructive QA testing method by the Contractor, TIP testing using thermal probes, or CSL testing shall be performed after the shaft concrete has cured at least 96 hours. Additional curing time prior to testing may be required if the shaft concrete contains admixtures, such as set retarding admixture or water-reducing admixture, added in accordance with Section 6-02.3(3). The additional curing time prior to testing required under these circumstances shall not be grounds for additional compensation or extension of time to the Contractor in accordance with Section 1-08.8.

6-19.3(9)B Inspection of CSL Access Tubes

This section's title is revised to read:

6-19.3(9)B Inspection of Access Tubes

6-19.3(9)C Engineer's Final Acceptance of Shafts

This section, including title, is revised to read:

6-19.3(9)C TIP Testing With Thermal Wires and TAPs

If selected as the nondestructive QA testing method by the Contractor, TIP testing with thermal wires and TAPs (See Section 6-19.3(6)E) shall be performed. The TIP testing shall commence at the beginning of the concrete placement operation, recording temperature readings at 15-minute intervals until the peak temperature is captured in the data. Additional curing time may be required if the shaft concrete contains admixtures, such as set retarding admixture or water-reducing admixture, added in accordance with Section 6-02.3(3). The additional curing time required under these circumstances shall not be grounds for additional compensation or extension of time to the Contractor in accordance with Section 1-08.8.

TIP testing shall be conducted at all shafts in which thermal wires and TAPs have been installed for thermal wire analysis (Section 6-19.3(6)A).

6-19.3(9)D Requirements to Continue Shaft Excavation Prior to Acceptance of First Shaft

This section, including title, is revised to read:

6-19.3(9)D Nondestructive QA Testing Results Submittal

The Contractor shall submit the results and analysis of the nondestructive QA testing for each shaft tested. The Contractor shall submit the test results within three working days of testing. Results shall be a Type 1 Working Drawing presented in a written report.

TIP reports shall include:

1. A map or plot of the wire/tube location within the shaft and their position relative to a known and identifiable location, such as North.

2. Graphical displays of temperature measurements versus depth of each wire or tube for the analysis time selected, overall average temperature with depth, shaft radius or diameter with depth, concrete cover versus cage position with depth, and effective radius.

3. The report shall identify unusual temperatures, particularly significantly cooler local deviations from the overall average.

4. The report shall identify the location and extent where satisfactory or questionable concrete is identified.

    a. Satisfactory (S) - 0 to 6% Effective Radius Reduction and Cover Criteria Met

    b. Questionable (Q) - Effective Local Radius Reduction > 6%, Effective Local Average Diameter Reduction > 4%, or Cover Criteria Not Met

5. Variations in temperature between wire/tubes (at each depth) which in turn correspond to variations in cage alignment.

6. Where shaft specific construction information is available (e.g. elevations of the top of shaft, bottom of casing, bottom of shaft, etc.), these values shall be noted on all pertinent graphical displays.

CSL reports shall include:

1. A map or plot of the tube location within the shaft and their position relative to a known and identifiable location, such as North.

2. Graphical displays of CSL Energy versus Depth and CSL signal arrival time versus depth or velocity versus depth.

3. The report shall identify the location and extent where good, questionable, and poor concrete is identified, where no signal was received, or where water is present.

    a. Good (G) - No signal distortion and decrease in signal velocity of 10% or less is indicative of good quality concrete.

    b. Questionable (Q) - Minor signal distortion and a lower signal amplitude with a decrease in signal velocity between 10% and 20%.

    c. Poor (P) - Severe signal distortion and much lower signal amplitude with a decrease in signal velocity of 20% or more.

    d. No Signal (NS) - No signal was received.

e. Water (W) - A measured signal velocity of nominally V = 4,800 to 5,000 fps.

All QA test reports will provide a recommendation to accept the shaft as-is, recommendation for further review by the Engineer, or will provide a plan for further testing, investigation or repair to address any deficiencies identified by the testing.

6-19.3(9)E Additional CSL Testing

This section, including title, is revised to read:

6-19.3(9)E Vacant

6-19.3(9)I Requirements for CSL Access Tubes and Cored Holes After CSL Testing

This section's title is revised to read:

6-19.3(9)I Requirements for Access Tubes and Cored Holes After CSL Testing

6-19.4 Measurement

This section is revised to read:

Constructing shafts will be measured by the linear foot. The linear foot measurement will be calculated using the top of shaft elevation and the bottom of shaft elevation for each shaft as shown in the Plans.

Rock excavation for shaft, including haul, will be measured by the linear foot of shaft excavated. The linear feet measurement will be computed using the top of the rock line, defined as the highest bedrock point within the shaft diameter, and the bottom elevation shown in the Plans.

QA shaft test will be measured once per shaft tested.

6-19.5 Payment

This section is revised to read:

Payment will be made for the following Bid items when they are included in the Proposal:

"Constructing___Diam. Shaft", per linear foot.
The unit Contract price per linear foot for "Constructing___Diam. Shaft" shall be full pay for performing the Work as specified, including:

1. Soil excavation for shaft, including all costs in connection with furnishing, mixing, placing, maintaining, containing, collecting, and disposing of all mineral, synthetic and water slurry, and disposing of groundwater collected by the excavated shaft.

2. Furnishing and placing temporary shaft casing, including temporary casing in addition to the required casing specified in the Special Provisions, and including all costs in connection with completely removing the casing after completing shaft construction.

3. Furnishing permanent casing for shaft.

4. Placing permanent casing for shaft.

5. Casing shoring, including all costs in connection with furnishing and installing casing shoring above the specified upper limit for casing shoring but necessary to provide for sufficient water head pressure to resist artesian water pressure present in the shaft excavation, removing casing shoring, and placing seals when required.

6. Furnishing and placing steel reinforcing bar and epoxy-coated steel reinforcing bar, including furnishing and installing steel reinforcing bar centralizers.

7. Installation of CSL tubes or thermal wires.

8. Furnishing, placing and curing Concrete Class 4000P to the top of shaft or to the construction joint at the base of the shaft-column splice zone as applicable.

Payment for "Constructing___Diam. Shaft" will be made upon Engineer acceptance of the shaft, including completion of satisfactory QA shaft tests as applicable.

"Rock Excavation For Shaft Including Haul", per linear foot.
When rock excavation is encountered, payment for rock excavation is in addition to the unit Contract price per linear foot for "Constructing___Diam. Shaft"

"Shoring Or Extra Excavation Cl. A - ___", lump sum.
The lump sum Contract price for "Shoring Or Extra Excavation Cl. A - ___" shall be full pay for performing the Work as specified, including all costs in connection with all excavation outside the limits specified for soil and rock excavation for shaft including haul, all temporary telescoping casings, and all temporary casings beyond the limits of required temporary casing specified in the Special Provisions.

"QA Shaft Test", per each.
The unit Contract price per each for "QA Shaft Test" shall be full pay for performing the Work as specified, including operating all associated accessories necessary to record and process data and develop the summary QA test reports. Section 1-04.6 does not apply to this bid item.

"Removing Shaft Obstructions", estimated.
Payment for removing, breaking-up, or pushing aside shaft obstructions, as defined in Section 6-19.3(3)E, will be made for the changes in shaft construction methods necessary to deal with the obstruction. The Contractor and the Engineer shall evaluate the effort made and reach agreement on the equipment and employees utilized, and the number of hours involved for each. Once these cost items and their duration have been agreed upon, the payment amount will be determined using the rate and markup methods specified in Section 1-09.6. For the purpose of providing a common proposal for all Bidders, the Contracting Agency has entered an amount for the item "Removing Shaft Obstructions" in the Bid Proposal to become a part of the total Bid by the Contractor.

If drilled shaft tools, cutting teeth, casing or Kelly bar is damaged as a result of the obstruction removal work, the Contractor will be compensated for the costs to repair this equipment in accordance with Section 1-09.6.

If shaft construction equipment is idled as a result of the Work required to deal with the obstruction and cannot be reasonably reassigned within the project, then standby payment for the idled equipment will be added to the payment calculations. If labor is idled as a result of the Work required to deal with the obstruction and cannot be reasonably reassigned within the project, then all labor costs resulting from Contractor labor agreements and established Contractor policies will be added to the payment calculations.

The Contractor shall perform the amount of obstruction Work estimated by the Contracting Agency within the original time of the Contract. The Engineer will consider a time adjustment and additional compensation for costs related to the extended duration of the shaft construction operations, provided:

1. The dollar amount estimated by the Contracting Agency has been exceeded, and

2. The Contractor shows that the obstruction removal Work represents a delay to the completion of the project based on the current progress schedule provided in accordance with Section 1-08.3.

7-02.AP7

Section 7-02, Culverts
August 1, 2016

7-02.2 Materials

The following three new items are inserted after the item “Aggregate for Portland Cement Concrete:

Gravel Backfill for Pipe Zone Bedding	9-03.12(3)
Butyl Rubber Sealant	9-04.11
External Sealing Band	9-04.12

The last paragraph is deleted.

7-02.3(6) Precast Reinf. Conc. Three Sided Structures, Box Culverts and Split Box Culverts

This section is supplemented with the following new paragraph:

When the Plans include a complete set of design details for a Structure (defining panel shapes and dimensions, concrete strength requirements, and steel reinforcing bar, joint, and connection details), the design and load rating preparation and calculation submittal requirements of Sections 7-02.3(6)A1 and 7-02.3(6)A2 do not apply for the components shown in the Plans, but all other requirements of this Section remain in effect. The Contractor may propose alternate concrete culvert designs, accommodating the same rise, span, and length as shown in the Plans, to replace the Structure details shown in

the Plans. If an alternate concrete culvert design is proposed, all of the requirements of this Section, including design and load rating preparation and calculation submittal, apply.

7-02.3(6)A General

This section is supplemented with the following two new paragraphs:

Tolerances for PRCTSS shall be as follows:

1. Internal Dimensions – The internal dimension shall not vary more than 1 percent or 2 inches, whichever is less, from the Plan dimensions. The haunch dimensions shall not vary more than $^{3}/_{4}$ inch from the Plan dimensions.

2. Slab and Wall Thickness – The slab and wall thickness shall not be less than that shown in the Plans by more than 5 percent or ½ inch, whichever is greater. A thickness more than that required in the Plans will not be a cause for rejection if proper joining is not affected.

3. Length of Opposite Surfaces – Variations in lengths of two opposite surfaces of the three-sided section shall not be more than $^{3}/_{4}$ inch unless beveled sections are being used to accommodate a curve in the alignment.

4. Reinforcing steel placement shall meet the tolerances specified in Section 6-02.3(24)C.

Tolerances for PRCBC and PRCSBC shall be as follows:

1. Internal Dimensions – The internal dimensions shall not vary more than 1 percent from the Plan dimensions. If haunches are used, the haunch dimensions shall not vary more than ¼ inch from the Plan dimensions.

2. Slab and Wall Thickness – The slab and wall thickness shall not be less than that shown in the Plans by more than 5 percent or $^{3}/_{16}$ inch, whichever is greater. A thickness more than that required in the Plans will not be a cause for rejection.

3. Length of Opposite Box Segments – Variations in lengths of two opposite surfaces of the box segments shall not be more than $^{1}/_{8}$ inch per foot of internal span, with a maximum of $^{5}/_{8}$ inch for all sizes through 7 feet internal span, and a maximum of ¾ inch for internal spans greater than 7 feet, except where beveled sections are being used to accommodate a curve in the alignment.

4. Length of Box Segments – The underrun in length of a segment shall not be more than $^{1}/_{8}$ inch per foot of length with a maximum of $^{1}/_{2}$ inch in any box segment.

5. Length of Legs and Slabs – The variation in length of the legs shall not be more than $^{1}/_{8}$ inch per foot of the rise of the leg per leg with a maximum of $^{5}/_{8}$ inches. The differential length between opposing legs of the same segment shall not be more than $^{1}/_{2}$ inch. Length of independent top slab spans shall

not vary by more than 1/8 inch per foot of span of the top slab, with a maximum of 5/8 inches.

6. Reinforcing steel placement shall meet the tolerances specified in Section 6-02.3(24)C.

This section is supplemented with the following new subsection:

7-02.3(6)A5 Wingwalls and Retaining Walls

Wingwalls and retaining walls (including cutoff walls and headwalls) shall be constructed in accordance with the Contractor's design and Working Drawing submittal or when the Plans include a complete set of design details for a wall (defining panel shapes and dimensions, concrete strength requirements, and steel reinforcing bar, joint, and connection details),the details shown in the Plans.

Precast concrete construction shall conform to Sections 6-02.3(28) and 6-11.3(3).

Culvert bedding material shall be furnished, placed, and compacted in accordance with Section 7-02.3(6)A4.

7-02.3(6)A1 Design Criteria

The first sentence of the last paragraph is revised to read:

Whenever the minimum finished backfill or surfacing depth above the top of the Structure is less than 1'-0" (except when the top of the Structure is directly exposed to vehicular traffic), either all steel reinforcing bars in the span unit shall be epoxy-coated with 2" minimum concrete cover from the face of concrete to the face of the top mat of steel reinforcing bars, or the minimum concrete cover shall be 2½".

The last sentence of the last paragraph is revised to read:

Concrete cover from the face of any concrete surface to the face of any steel reinforcement shall be 1-inch minimum end clearance at all joints, and 2-inches minimum at all other locations.

7-02.3(6)A2 Submittals

The first paragraph is revised to read:

The Contractor shall submit shop drawings of the precast Structures. Fabrication shop drawings replicating complete design details when shown in the Plans shall be Type 2 Working Drawings. Submittals completing the design based on the schematic geometric requirements shown in the Plans, or proposing a Contractor designed alternative concrete culvert Structure shall be Type 2E Working Drawings with supporting design calculations.

The last paragraph is revised to read:

For precast Structures with a span length greater than 20-feet (as defined in Section 7-02.3(6)A1), except when the depth of fill above the top of culvert exceeds the Structure span length, a Type 2E Working Drawing shall be submitted consisting of a load rating report prepared in accordance with the AASHTO Manual for Bridge Evaluation and WSDOT Bridge Design Manual LRFD M 23-50 Chapter 13. Soil pressures used shall

include effects from the backfill material and compaction methods, and shall be in accordance with the WSDOT Geotechnical Design Manual M 46-03 and the geotechnical report prepared for the project.

7-02.3(6)A3 Casting

This section is revised to read:

Concrete shall conform to Section 6-02.3(28)B, with a 28-day compressive strength as specified in the Plans or the Working Drawings submittal.

7-02.3(6)A4 Excavation and Bedding Preparation

The last paragraph is revised to read:

The upper layer of bedding course shall be a 6-inch minimum thickness layer of culvert bedding material, defined as granular material either conforming to Section 9-03.12(3) or to AASHTO Grading No. 57 as specified in Section 9-03.1(4)C. The plan limits of the culvert bedding material shall extend 1-foot beyond the plan limits of the culvert or the Structure footing as applicable. The culvert bedding material shall be compacted in accordance with the Section 2-09.3(1)E requirements for gravel backfill for drains. After compaction, the culvert bedding material shall be screeded transversely to the specified line and grade. Voids in the screeded culvert bedding material shall be filled and then rescreeded prior to erecting the precast Structure.

7-02.3(6)B3 Erection

The following sentence is inserted after the first sentence of the last paragraph:

The weld-tie anchor spacing shall not exceed 6’-0”.

The last sentence of the last paragraph is revised to read:

Keyways shall be filled with grout conforming to Section 9-20.3(2).

7-02.3(6)C1 Casting

This section is revised to read:

PRCSBC shall consist of lid elements and “U” shaped base elements. The vertical legs of the “U” shaped base elements shall be full height matching the rise of the culvert, except as otherwise specified for culvert spans greater than 20-feet. For PRCSBC spans greater than 20-feet (as defined in Section 7-02.3(6)A1), the lid elements may include vertical legs of a maximum length of 4-feet.

All vertical and horizontal joints of PRCBC and PRCSBC elements shall be tongue and groove type joints, except PRCBC and PRCSBC of 20-foot span or less may have keyway joints connected by weld-tie anchors in accordance with Section 6-02.3(25)O. The weld-tie anchor spacing shall not exceed 6’-0”. There shall be at least two galvanized steel tie plates across each top unit tongue and groove joint and each tongue and groove joint between upper and lower units, unless otherwise shown in the Plans or required by the seismic designed completed in accordance with Section 7-02.3(6)A1.

7-02.3(6)C3 Erection

This section is revised to read:

PRCBC and PRCSBC shall be erected and backfilled in accordance with the erection sequence specified in the Working Drawing submittal, and the construction equipment restrictions specified in Section 6-02.3(25)O.

The Contractor shall install a continuous strip of butyl rubber sealant within all tongue and groove joints prior to connecting the precast elements together. The butyl rubber sealant shall have a minimum cross section of $^{1}\square_{2}$-inch by $1^{1}\square_{2}$-inch, unless otherwise shown in the Plans.

After connecting the joints with weld-tie anchors, the Contractor shall paint the exposed metal surfaces with one coat of field primer conforming to Section 9-08.1(2)F. Keyways shall be filled with grout conforming to Section 9-20.3(2).

The Contractor shall wrap all exterior joints along the top and sides of the PRCBC and PRCSBC with a 12-inch wide strip of external sealing band centered about the joint and adhesively bonded to the concrete surface.

Backfill beside the PRCBC and PRCSBC shall be brought up in sequential layers, compacted concurrently. The difference in backfill height on opposing sides of the Structure shall not exceed 2-feet.

7-02.4 Measurement

This section is supplemented with the following:

Culvert bedding material will be measured by the cubic yard of material placed.

7-02.5 Payment

This section is supplemented with the following:

"Culvert Bedding Material", per cubic yard.

8-01.AP8

Section 8-01, Erosion Control and Water Pollution Control
August 1, 2016

8-01.2 Materials

This section is supplemented with the following new paragraph:

Recycled concrete, in any form, shall not be used for any Work defined in Section 8-01.

8-01.3(7) Stabilized Construction Entrance

The last sentence of the first paragraph is revised to read:

Material used for stabilized construction entrance shall be free of extraneous materials that may cause or contribute to track out.

8-01.3(8) Street Cleaning

This section is revised to read:

Self-propelled street sweepers shall be used to remove and collect sediment and other debris from the Roadway, whenever required by the Engineer. The street sweeper shall effectively collect these materials and prevent them from being washed or blown off the Roadway or into waters of the State. Street sweepers shall not generate fugitive dust and shall be designed and operated in compliance with applicable air quality standards.

Material collected by the street sweeper shall be disposed of in accordance with Section 2-03.3(7)C.

Street washing with water will require the concurrence of the Engineer.

8-10.AP8

Section 8-10, Guide Posts
January 4, 2016

8-10.3 Construction Requirements
The last sentence of the second paragraph is deleted.

8-11.AP8

Section 8-11, Guardrail
August 1, 2016

8-11.3(1)F Removing and Resetting Beam Guardrail
The last sentence of the first paragraph is deleted.

8-11.5 Payment
The paragraph following the Bid item “Removing and Resetting Beam Guardrail”, per linear foot is revised to read:

The unit Contract price per linear foot for “Removing and Resetting Beam Guardrail” shall be full payment for all costs to perform the Work as described in Section 8-11.3(1)F, except for replacement posts and blocks.

The paragraph following the Bid item “Raising Existing Beam Guardrail”, per linear foot is revised to read:

The unit Contract price per linear foot for “Raising Existing Beam Guardrail” shall be full payment for all costs to perform the Work as described in Section 8-11.3(1)E, except for replacement posts and blocks.

8-20.AP8

Section 8-20, Illumination, Traffic Signal Systems, Intelligent Transportation Systems, and Electrical
April 4, 2016

8-20.3(5)A General
The last paragraph is revised to read:

Immediately after the sizing mandrel has been pulled through, install an equipment grounding conductor if applicable (see Section 8-20.3(9)) and any new or existing wire or cable as specified in the Plans. Where conduit is installed for future use, install a 200-pound minimum tensile strength pull string with the equipment grounding conductor. The pull string shall be attached to duct plugs or caps at both ends of the conduit.

8-20.3(5)A1 Fiber Optic Conduit

The last paragraph is deleted.

8-20.3(5)D Conduit Placement

Item number 2 is revised to read:

2. 24-inches below the top of the untreated surfacing on a Roadbed.

8-20.3(9) Bonding, Grounding

The following two new paragraphs are inserted after the first paragraph:

Install an equipment grounding conductor in all new conduit, whether or not the equipment grounding conductor is called for in the wire schedule.

For each new conduit with innerduct install an equipment grounding conductor in only one of the innerducts unless otherwise required by the NEC or the Plans.

The fourth paragraph (after the preceding Amendments are applied) is revised to read:

Bonding jumpers and equipment grounding conductors meeting the requirements of Section 9-29.3(2)A3 shall be minimum #8 AWG, installed in accordance with the NEC. Where existing conduits are used for the installation of new circuits, an equipment grounding conductor shall be installed unless an existing equipment ground conductor, which is appropriate for the largest circuit, is already present in the existing raceway. The equipment ground conductor between the isolation switch and the sign lighter fixtures shall be minimum #14 AWG stranded copper conductor. Where parallel circuits are enclosed in a common conduit, the equipment-grounding conductor shall be sized by the largest overcurrent device serving any circuit contained within the conduit.

The second sentence of the fifth paragraph (after the preceding Amendments are applied) is revised to read:

A non-insulated stranded copper conductor, minimum #8 AWG with a full circle crimp on connector (crimped with a manufacturer recommended crimper) shall be connected to the junction box frame or frame bonding stud, the other end shall be crimped to the equipment bonding conductor, using a “C” type crimp connector.

The last two sentences of the sixth paragraph (after the preceding Amendments are applied) are revised to read:

For light standards, signal standards, cantilever and sign bridge Structures the supplemental grounding conductor shall be #4 AWG non-insulated stranded copper conductor. For steel sign posts which support signs with sign lighting or flashing beacons the supplemental grounding conductor shall be #6 AWG non insulated stranded copper conductor.

The fourth to last paragraph is revised to read:

> Install a two grounding electrode system at each service entrance point, at each electrical service installation and at each separately derived power source. The service entrance grounding electrode system shall conform to the “Service Ground” detail in the Standard Plans. If soil conditions make vertical grounding electrode installation impossible an alternate installation procedure as described in the NEC may be used. Maintain a minimum of 6 feet of separation between any two grounding electrodes within the grounding system. Grounding electrodes shall be bonded copper, ferrous core materials and shall be solid rods not less than 10 feet in length if they are ½ inch in diameter or not less than 8 feet in length if they are ⅝ inch or larger in diameter.

8-22.AP8

Section 8-22, Pavement Marking
January 4, 2016

8-22.4 Measurement

The first two sentences of the fourth paragraph are revised to read:

> The measurement for “Painted Wide Lane Line”, “Plastic Wide Lane Line”, “Profiled Plastic Wide Lane Line”, “Painted Barrier Center Line”, “Plastic Barrier Center Line”, “Painted Stop Line”, “Plastic Stop Line”, “Painted Wide Dotted Entry Line”, or “Plastic Wide Dotted Entry Line” will be based on the total length of each painted, plastic or profiled plastic line installed. No deduction will be made for the unmarked area when the marking includes a broken line such as, wide broken lane line, drop lane line, wide dotted lane line or wide dotted entry line.

8-22.5 Payment

The following two new Bid items are inserted after the Bid item “Plastic Crosshatch Marking”, per linear foot:

> “Painted Wide Dotted Entry Line”, per linear foot.
>
> “Plastic Wide Dotted Entry Line”, per linear foot.

9-03.AP9

Section 9-03, Aggregates
August 1, 2016

9-03.1(1) General Requirements

This first paragraph is supplemented with the following:

> Reclaimed aggregate may be used if it complies with the specifications for Portland Cement Concrete. Reclaimed aggregate is aggregate that has been recovered from plastic concrete by washing away the cementitious materials.

9-03.1(2) Fine Aggregate for Portland Cement Concrete

This section is revised to read:

Fine aggregate shall consist of natural sand or manufactured sand, or combinations thereof, accepted by the Engineer, having hard, strong, durable particles free from adherent coating. Fine aggregate shall be washed thoroughly to meet the specifications.

9-03.1(2)A Deleterious Substances

This section is revised to read:

The amount of deleterious substances in the washed aggregate shall be tested in accordance with AASHTO M 6 and not exceed the following values:

Material finer than No. 200 Sieve	2.5 percent by weight
Clay lumps and friable particles	3.0 percent by weight
Coal and lignite	0.25 percent by weight
Particles of specific gravity less than 2.00	1.0 percent by weight.

Organic impurities shall be tested in accordance with AASHTO T 21 by the glass color standard procedure and results darker than organic plate no. 3 shall be rejected. A darker color results from AASHTO T 21 may be used provided that when tested for the effect of organic impurities on strength of mortar, the relative strength at 7 days, calculated in accordance with AASHTO T 71, is not less than 95 percent.

9-03.1(4) Coarse Aggregate for Portland Cement Concrete

This section is revised to read:

Coarse aggregate for concrete shall consist of gravel, crushed gravel, crushed stone, or combinations thereof having hard, strong, durable pieces free from adherent coatings. Coarse aggregate shall be washed to meet the specifications.

9-03.1(4)A Deleterious

This section, including title, is revised to read:

9-03.1(4)A Deleterious Substances

The amount of deleterious substances in the washed aggregate shall be tested in accordance with AASHTO M 80 and not exceed the following values:

Material finer than No. 200	1.0[1] percent by weight
Clay lumps and Friable Particles	2.0 percent by weight
Shale	2.0 percent by weight
Wood waste	0.05 percent by weight
Coal and Lignite	0.5 percent by weight
Sum of Clay Lumps, Friable Particles, and Chert (Less Than 2.40 specific gravity SSD)	3.0 percent by weight

[1]If the material finer than the No. 200 sieve is free of clay and shale, this percentage may be increased to 1.5.

9-03.1(4)C Grading

The following new sentence is inserted at the beginning of the last pargraph:

Where coarse aggregate size 467 is used, the aggregate may be furnished in at least two separate sizes.

9-03.1(5) Combined Aggregate Gradation for Portland Cement Concrete

This section is revised to read:

As an alternative to using the fine aggregate sieve grading requirements in Section 9-03.1(2)B, and coarse aggregate sieve grading requirements in Section 9-03.1(4)C, a combined aggregate gradation conforming to the requirements of Section 9-03.1(5)A may be used.

9-03.1(5)A Deleterious Substances

This section is revised to read:

The amount of deleterious substances in the washed aggregates $^{3}\square_{8}$ inch or larger shall not exceed the values specified in Section 9-03.1(4)A and for aggregates smaller than $^{3}\square_{8}$ inch they shall not exceed the values specified in Section 9-03.1(2)A.

9-03.1(5)B Grading

The first paragraph is deleted.

9-03.8(7) HMA Tolerances and Adjustments

In the table in item 1, the last column titled “Commercial Evaluation” is revised to read “Visual Evaluation”.

9-03.11(1) Streambed Sediment

The following three new sentences are inserted after the first sentence of the first paragraph:

Alternate gradations may be used if proposed by the Contractor and accepted by the Engineer. The Contractor shall submit a Type 2 Working Drawing consisting of 0.45 power maximum density curve of the proposed gradation. The alternate gradation shall closely follow the maximum density line and have Nominal Aggregate Size of no less than 1½ inches or no greater than 3 inches.

9-03.21(1)B Concrete Rubble

This section, including title, is revised to read:

9-03.21(1)B Recycled Concrete Aggregate

Recycled concrete aggregates are coarse aggregates manufactured from hardened concrete mixtures. Recycled concrete aggregate may be used as coarse aggregate or blended with coarse aggregate for Commercial Concrete. Recycled concrete aggregate shall meet all of the requirements for coarse aggregate contained in Section 9-03.1(4) or 9-03.1(5). In addition to the requirements of Section 9-03.1(4) or 9-03.1(5), recycled concrete shall:

1. Contain an aggregated weight of less than 1 percent of adherent fines, vegetable matter, plastics, plaster, paper, gypsum board, metals, fabrics, wood, tile, glass, asphalt (bituminous) materials, brick, porcelain or other deleterious substance(s) not otherwise noted;
2. Be free of harmful components such as chlorides and reactive materials unless mitigation measures are taken to prevent recurrence in the new concrete;

3. Have an absorption of less than 10 percent when tested in accordance with AASHTO T 85.

Recycled concrete aggregate shall be in a saturated condition prior to mixing.

Recycled concrete aggregate shall not be placed below the ordinary high water mark of any water of the State.

9-03.21(1)D Recycled Steel Furnace Slag

This section title is revised to read:

Steel Furnace Slag

9-03.21(1)E Table on Maximum Allowable Percent (By Weight) of Recycled Material

The following new row is inserted after the second row:

Coarse Aggregate for Commercial Concrete	9-03.1(4)	0	100	0	0

9-04.AP9

Section 9-04, Joint and Crack Sealing Materials
August 1, 2016

This section is supplemented with the following two new subsections:

9-04.11 Butyl Rubber Sealant
Butyl rubber sealant shall conform to ASTM C 990.

9-04.12 External Sealing Band
External sealing band shall by Type III B conforming to ASTM C 877.

9-04.2(1) Hot Poured Joint Sealants

This section's content is deleted and replaced with the following new subsections:

9-04.2(1)A Hot Poured Sealant
Hot poured sealant shall be sampled in accordance with ASTM D5167 and tested in accordance with ASTM D5329.

9-04.2(1)A1 Hot Poured Sealant for Cement Concrete Pavement
Hot poured sealant for cement concrete pavement shall meet the requirements of ASTM D6690 Type IV, except for the following:

1. The Cone Penetration at 25°C shall be 130 maximum.

2. The extension for the Bond, non-immersed, shall be 100 percent.

9-04.2(1)A2 Hot Poured Sealant for Bituminous Pavement
Hot poured sealant for bituminous pavement shall meet the requirements of ASTM D6690 Type I or Type II.

9-04.2(1)B Sand Slurry for Bituminous Pavement

Sand slurry is mixture consisting of the following components measured by total weight:

1. Twenty percent CSS-1 emulsified asphalt,

2. Two percent portland cement, and

3. Seventy-eight percent fine aggregate meeting the requirements of 9-03.1(2)B Class 2. Fine aggregate may be damp (no free water).

9-04.2(2) Poured Rubber Joint Sealer

The last paragraph is deleted.

9-04.4(1) Rubber Gaskets for Aluminum or Steel Drain Pipe

“AASHTO M198” is revised to read “ASTM C 990”.

9-04.4(3) Gaskets for Aluminum or Steel Culvert or Storm Sewer Pipe

In the last sentence, “AASHTO M198” is revised to read “ASTM C 990”.

9-07.AP9

Section 9-07, Reinforcing Steel
August 1, 2016

9-07.1(1)A Acceptance of Materials

The first sentence of the first paragraph is revised to read:

> Reinforcing steel rebar manufacturers shall comply with the National Transportation Product Evaluation Program (NTPEP) Work Plan for Reinforcing Steel (rebar) Manufacturers.

The first sentence of the second paragraph is revised to read:

> Steel reinforcing bar manufacturers use either English or a Metric size designation while stamping rebar.

9-07.1(2) Bending

The first two sentences of the first paragraph are deleted and replaced with the following two new sentences:

> Steel reinforcing bars shall be cut and bent cold to the shapes shown on the Plans. Fabrication tolerances shall be in accordance with ACI 315.

9-10.AP9

Section 9-10, Piling
August 1, 2016

9-10.3 Cast-In-Place Concrete Piling

This section is revised to read:

Reinforcement for cast-in-place concrete piles shall conform to Section 9-07.2.

9-35.AP9

Section 9-35, Temporary Traffic Control Materials
August 1, 2016

9-35.12 Transportable Attenuator

The second sentence of the first paragraph is revised to read:

> The transportable attenuator shall be mounted on, or attached to, a host vehicle that complies with the manufacturer's recommended weight range.

SPECIAL PROVISIONS

INTRODUCTION TO THE SPECIAL PROVISIONS

(August 14, 2013 APWA GSP)

The work on this project shall be accomplished in accordance with the *Standard Specifications for Road, Bridge and Municipal Construction*, 2016 edition, as issued by the Washington State Department of Transportation (WSDOT) and the American Public Works Association (APWA), Washington State Chapter (hereafter "Standard Specifications"). The Standard Specifications, as modified or supplemented by the Amendments to the Standard Specifications and these Special Provisions, all of which are made a part of the Contract Documents, shall govern all of the Work.

These Special Provisions are made up of both General Special Provisions (GSPs) from various sources, which may have project-specific fill-ins; and project-specific Special Provisions. Each Provision either supplements, modifies, or replaces the comparable Standard Specification, or is a new Provision. The deletion, amendment, alteration, or addition to any subsection or portion of the Standard Specifications is meant to pertain only to that particular portion of the section, and in no way should it be interpreted that the balance of the section does not apply.

The project-specific Special Provisions are not labeled as such. The GSPs are labeled under the headers of each GSP, with the effective date of the GSP and its source. For example:

(March 8, 2013 APWA GSP)
(April 1, 2013 WSDOT GSP)
(May 1, 2013 NWR GSP)

Also incorporated into the Contract Documents by reference are:

- *Manual on Uniform Traffic Control Devices for Streets and Highways*, currently adopted edition, with Washington State modifications, if any
- *Standard Plans for Road, Bridge and Municipal Construction*, WSDOT/APWA, current edition
- City of Fife Standards and Details

Contractor shall obtain copies of these publications, at Contractor's own expense.

Division 1
General Requirements

DESCRIPTION OF WORK

(March 13, 1995)
This Contract provides for the improvement of *** 70th Avenue including traffic signal modifications, striping *** and other work, all in accordance with the attached Contract Plans, these Contract Provisions, and the Standard Specifications.

DEFINITION AND TERMS

1-01.3 DEFINITIONS

(January 4, 2016 APWA GSP)

Delete the heading **Completion Dates** and the three paragraphs that follow it, and replace them with the following:

Dates

Bid Opening Date
The date on which the Contracting Agency publicly opens and reads the Bids.

Award Date
The date of the formal decision of the Contracting Agency to accept the lowest responsible and responsive Bidder for the Work.

Contract Execution Date
The date the Contracting Agency officially binds the Agency to the Contract.

Notice to Proceed Date
The date stated in the Notice to Proceed on which the Contract time begins.

Substantial Completion Date
The day the Engineer determines the Contracting Agency has full and unrestricted use and benefit of the facilities, both from the operational and safety standpoint, any remaining traffic disruptions will be rare and brief, and only minor incidental work, replacement of temporary substitute facilities, plant establishment periods, or correction or repair remains for the Physical Completion of the total Contract.

Physical Completion Date
The day all of the Work is physically completed on the project. All documentation required by the Contract and required by law does not necessarily need to be furnished by the Contractor by this date.

Completion Date
The day all the Work specified in the Contract is completed and all the obligations of the Contractor under the contract are fulfilled by the Contractor. All documentation required by the Contract and required by law must be furnished by the Contractor before establishment of this date.

Final Acceptance Date
The date on which the Contracting Agency accepts the Work as complete.

Supplement this Section with the following:

All references in the Standard Specifications, Amendments, or WSDOT General Special Provisions, to the terms “Department of Transportation”, “Washington State Transportation Commission”, “Commission”, “Secretary of Transportation”, “Secretary”, “Headquarters”, and “State Treasurer” shall be revised to read “Contracting Agency”.

All references to the terms “State” or “state” shall be revised to read “Contracting Agency” unless the reference is to an administrative agency of the State of Washington, a State statute or regulation, or the context reasonably indicates otherwise.

All references to “State Materials Laboratory” shall be revised to read “Contracting Agency designated location”.

All references to "final contract voucher certification" shall be interpreted to mean the Contracting Agency form(s) by which final payment is authorized, and final completion and acceptance granted.

Additive
A supplemental unit of work or group of bid items, identified separately in the Bid Proposal, which may, at the discretion of the Contracting Agency, be awarded in addition to the base bid.

Alternate
One of two or more units of work or groups of bid items, identified separately in the Bid Proposal, from which the Contracting Agency may make a choice between different methods or material of construction for performing the same work.

Business Day
A business day is any day from Monday through Friday except holidays as listed in Section 1-08.5.

Contract Bond
The definition in the Standard Specifications for "Contract Bond" applies to whatever bond form(s) are required by the Contract Documents, which may be a combination of a Payment Bond and a Performance Bond.

Contract Documents
See definition for "Contract".

Contract Time
The period of time established by the terms and conditions of the Contract within which the Work must be physically completed.

Notice of Award
The written notice from the Contracting Agency to the successful Bidder signifying the Contracting Agency's acceptance of the Bid Proposal.

Notice to Proceed
The written notice from the Contracting Agency or Engineer to the Contractor authorizing and directing the Contractor to proceed with the Work and establishing the date on which the Contract time begins.

Traffic
Both vehicular and non-vehicular traffic, such as pedestrians, bicyclists, wheelchairs, and equestrian traffic.

1-02 BID PROCEDURES AND CONDITIONS

1-02.1 Prequalification of Bidders

Delete this section and replace it with the following:

1-02.1 Qualifications of Bidder

(January 24, 2011 APWA GSP)

Before award of a public works contract, a bidder must meet at least the minimum qualifications of RCW 39.04.350(1) to be considered a responsible bidder and qualified to be awarded a public works project.

1-02.2 PLANS AND SPECIFICATIONS

(June 27, 2011 APWA GSP)

Delete this section and replace it with the following:

Information as to where Bid Documents can be obtained or reviewed can be found in the Call for Bids (Advertisement for Bids) for the work.

After award of the contract, plans and specifications will be issued to the Contractor at no cost as detailed below:

To Prime Contractor	No. of Sets	Basis of Distribution
Reduced plans (11" x 17")	3	Furnished automatically upon award.
Contract Provisions	1	Furnished automatically upon award.
Large plans (e.g., 22" x 34")	1	Furnished only upon request.

Additional plans and Contract Provisions may be obtained by the Contractor from the source stated in the Call for Bids, at the Contractor's own expense.

EXAMINATION OF PLANS, SPECIFICATIONS AND SITE OF WORK

1-02.4(2) Subsurface Information

(March 8, 2013 APWA GSP)

The second sentence in the first paragraph is revised to read:

The Summary of Geotechnical Conditions and the boring logs, <u>if and when included</u> as an appendix to the Special Provisions, shall be considered as part of the Contract.

1-02.5 PROPOSAL FORMS

(June 27, 2011 APWA GSP)

Delete this section and replace it with the following:

The Proposal Form will identify the project and its location and describe the work. It will also list estimated quantities, units of measurement, the items of work, and the materials to be furnished at the unit bid prices. The bidder shall complete spaces on the proposal form that call for, but are not limited to, unit prices; extensions; summations; the total bid amount; signatures; date; and, where applicable, retail sales taxes and acknowledgment of addenda; the bidder's name, address, telephone number, and signature; the bidder's D/M/WBE commitment, if applicable; a State of Washington Contractor's Registration Number; and a Business License Number, if applicable. Bids shall be completed by typing or shall be printed in ink by hand, preferably in black ink. The required certifications are included as part of the Proposal Form.

The Contracting Agency reserves the right to arrange the proposal forms with alternates and additives, if such be to the advantage of the Contracting Agency. The bidder shall bid on all alternates and additives set forth in the Proposal Form unless otherwise specified.

1-02.6 PREPARATION OF PROPOSAL

(June 27, 2011 APWA GSP)

Supplement the second paragraph with the following:

4. If a minimum bid amount has been established for any item, the unit or lump sum price must equal or exceed the minimum amount stated.
5. Any correction to a bid made by interlineation, alteration, or erasure, shall be initialed by the signer of the bid.

Delete the last paragraph, and replace it with the following:

The Bidder shall make no stipulation on the Bid Form, nor qualify the bid in any manner.

A bid by a corporation shall be executed in the corporate name, by the president or a vice president (or other corporate officer accompanied by evidence of authority to sign).

A bid by a partnership shall be executed in the partnership name, and signed by a partner. A copy of the partnership agreement shall be submitted with the Bid Form if any D/M/WBE requirements are to be satisfied through such an agreement.

A bid by a joint venture shall be executed in the joint venture name and signed by a member of the joint venture. A copy of the joint venture agreement shall be submitted with the Bid Form if any D/W/MBE requirements are to be satisfied through such an agreement.

The fourth paragraph of Section 1-02.6 is revised to read:

(May 7, 2012)

The Bidder shall submit with the Bid a completed Disadvantaged Business Enterprise (DBE) Utilization Certification, when required by the Special Provisions. For each and every DBE firm listed on the Bidder's completed Disadvantaged Business Enterprise Utilization Certification, the Bidder shall submit written confirmation from that DBE firm that the DBE is in agreement with the DBE participation commitment that the Bidder has made in the Bidder's completed Disadvantaged Business Enterprise Utilization Certification. WSDOT Form 422 031 EF (Disadvantaged Business Enterprise Written Confirmation Document) is to be used for this purpose. Bidder must submit good faith effort documentation only in the event the bidder's efforts to solicit sufficient DBE participation have been unsuccessful. Directions for delivery of the Disadvantaged Business Enterprise Written Confirmation Documents and Disadvantaged Business Enterprise Good Faith Effort documentation are included in Sections 1-02.9.

(August 2, 2004)
The fifth and sixth paragraphs of Section 1-02.6 are deleted.

1-02.7 BID DEPOSIT

(March 8, 2013 APWA GSP)

Supplement this section with the following:

Bid bonds shall contain the following:

1. Contracting Agency-assigned number for the project;
2. Name of the project;
3. The Contracting Agency named as obligee;
4. The amount of the bid bond stated either as a dollar figure or as a percentage which represents five percent of the maximum bid amount that could be awarded;
5. Signature of the bidder's officer empowered to sign official statements. The signature of the person authorized to submit the bid should agree with the signature on the bond, and the title of the person must accompany the said signature;
6. The signature of the surety's officer empowered to sign the bond and the power of attorney.

If so stated in the Contract Provisions, bidder must use the bond form included in the Contract Provisions.

If so stated in the Contract Provisions, cash will not be accepted for a bid deposit.

1-02.9 DELIVERY OF PROPOSAL

(August 15, 2012 APWA GSP, Option A)

Delete this section and replace it with the following:

Each proposal shall be submitted in a sealed envelope, with the Project Name and Project Number as stated in the Call for Bids clearly marked on the outside of the envelope, or as otherwise required in the Bid Documents, to ensure proper handling and delivery.

If the project has FHWA funding and requires DBE Written Confirmation Documents or Good Faith Effort Documentation, then to be considered responsive, the Bidder shall submit with their Bid Proposal, written Confirmation Documentation from each DBE firm listed on the Bidder's completed DBE Utilization Certification, form 272-056A EF, as required by Section 1-02.6.

The Contracting Agency will not open or consider any Bid Proposal that is received after the time specified in the Call for Bids for receipt of Bid Proposals, or received in a location other than that specified in the Call for Bids.

1-02.10 WITHDRAWING, REVISING, OR SUPPLEMENTING PROPOSAL

(July 23, 2015 APWA GSP)

Delete this section, and replace it with the following:

After submitting a physical Bid Proposal to the Contracting Agency, the Bidder may withdraw, revise, or supplement it if:

1. The Bidder submits a written request signed by an authorized person and physically delivers it to the place designated for receipt of Bid Proposals, and
2. The Contracting Agency receives the request before the time set for receipt of Bid Proposals, and
3. The revised or supplemented Bid Proposal (if any) is received by the Contracting Agency before the time set for receipt of Bid Proposals.

If the Bidder's request to withdraw, revise, or supplement its Bid Proposal is received before the time set for receipt of Bid Proposals, the Contracting Agency will return the unopened Proposal package to the Bidder. The Bidder must then submit the revised or supplemented package in its entirety. If the Bidder does not submit a revised or supplemented package, then its bid shall be considered withdrawn.

Late revised or supplemented Bid Proposals or late withdrawal requests will be date recorded by the Contracting Agency and returned unopened. Mailed, emailed, or faxed requests to withdraw, revise, or supplement a Bid Proposal are not acceptable.

1-02.12 PUBLIC OPENING OF PROPOSALS

Section 1-02.12 is supplemented with the following:

Date of Opening Bids

Sealed bids are to be received at the following location prior to the time specified:

The bid opening location, date, and time for this project will be found in the Call for bids (Advertisement for bids) for this work.

1-02.13 IRREGULAR PROPOSALS

(January 4, 2016 APWA GSP)

Delete this section and replace it with the following:

1. A proposal will be considered irregular and will be rejected if:
   a. The Bidder is not prequalified when so required;
   b. The authorized proposal form furnished by the Contracting Agency is not used or is altered;
   c. The completed proposal form contains any unauthorized additions, deletions, alternate Bids, or conditions;
   d. The Bidder adds provisions reserving the right to reject or accept the award, or enter into the Contract;
   e. A price per unit cannot be determined from the Bid Proposal;
   f. The Proposal form is not properly executed;
   g. The Bidder fails to submit or properly complete a Subcontractor list, if applicable, as required in Section 1-02.6;
   h. The Bidder fails to submit or properly complete a Disadvantaged Business Enterprise Certification, if applicable, as required in Section 1-02.6;
   i. The Bidder fails to submit written confirmation from each DBE firm listed on the Bidder's completed DBE Utilization Certification that they are in agreement with the bidders DBE participation commitment, if applicable, as required in Section 1-02.6, or if the written confirmation that is submitted fails to meet the requirements of the Special Provisions;
   j The Bidder fails to submit DBE Good Faith Effort documentation, if applicable, as required in Section 1-02.6, or if the documentation that is submitted fails to demonstrate that a Good Faith Effort to meet the Condition of Award was made;
   k. The Bid Proposal does not constitute a definite and unqualified offer to meet the material terms of the Bid invitation; or
   l. More than one proposal is submitted for the same project from a Bidder under the same or different names.

2. A Proposal may be considered irregular and may be rejected if:
   a. The Proposal does not include a unit price for every Bid item;
   b. Any of the unit prices are excessively unbalanced (either above or below the amount of a reasonable Bid) to the potential detriment of the Contracting Agency;
   c. Receipt of Addenda is not acknowledged;
   d. A member of a joint venture or partnership and the joint venture or partnership submit Proposals for the same project (in such an instance, both Bids may be rejected); or
   e. If Proposal form entries are not made in ink.

1-02.14 DISQUALIFICATION OF BIDDERS

(March 8, 2013 APWA GSP, Option B)

Delete this section and replace it with the following:

A Bidder will be deemed not responsible if the Bidder does not meet the mandatory bidder responsibility criteria in RCW 39.04.350(1), as amended; or does not meet the following Supplemental Criteria:

1. **Delinquent State Taxes**

   A Criterion: The Bidder shall not owe delinquent taxes to the Washington State Department of Revenue without a payment plan approved by the Department of Revenue.

   B. Documentation: The Bidder shall not be listed on the Washington State Department of Revenue's "Delinquent Taxpayer List" website: http://dor.wa.gov/content/fileandpaytaxes/latefiling/dtlwest.aspx , or if they are so listed, they must submit a written payment plan approved by the Department of Revenue, to the Contracting Agency by the deadline listed below.

2. **Federal Debarment**

   A Criterion: The Bidder shall not currently be debarred or suspended by the Federal government.

   B. Documentation: The Bidder shall not be listed as having an "active exclusion" on the U.S. government's "System for Award Management" database (www.sam.gov).

3. **Subcontractor Responsibility**

   A Criterion: The Bidder's standard subcontract form shall include the subcontractor responsibility language required by RCW 39.06.020, and the Bidder shall have an established procedure which it utilizes to validate the responsibility of each of its subcontractors. The Bidder's subcontract form shall also include a requirement that each of its subcontractors shall have and document a similar procedure to determine whether the sub-tier subcontractors with whom it contracts are also "responsible" subcontractors as defined by RCW 39.06.020.

   B. Documentation: The Bidder, if and when required as detailed below, shall submit a copy of its standard subcontract form for review by the Contracting Agency, and a written description of its procedure for validating the responsibility of subcontractors with which it contracts.

4. **Prevailing Wages**

   A Criterion: The Bidder shall not have a record of prevailing wage violations as determined by WA Labor & Industries in the five years prior to the bid submittal date, that demonstrates a pattern of failing to pay workers prevailing wages, unless there are extenuating circumstances and such circumstances are deemed acceptable to the Contracting Agency.

B. Documentation: The Bidder, if and when required as detailed below, shall submit a list of all prevailing wage violations in the five years prior to the bid submittal date, along with an explanation of each violation and how it was resolved. The Contracting Agency will evaluate these explanations and the resolution of each complaint to determine whether the violation demonstrate a pattern of failing to pay its workers prevailing wages as required.

5. **Claims Against Retainage and Bonds**

A Criterion: The Bidder shall not have a record of excessive claims filed against the retainage or payment bonds for public works projects in the three years prior to the bid submittal date, that demonstrate a lack of effective management by the Bidder of making timely and appropriate payments to its subcontractors, suppliers, and workers, unless there are extenuating circumstances and such circumstances are deemed acceptable to the Contracting Agency.

B. Documentation: The Bidder, if and when required as detailed below, shall submit a list of the public works projects completed in the three years prior to the bid submittal date that have had claims against retainage and bonds and include for each project the following information:

- Name of project
- The owner and contact information for the owner;
- A list of claims filed against the retainage and/or payment bond for any of the projects listed;
- A written explanation of the circumstances surrounding each claim and the ultimate resolution of the claim.

6. **Public Bidding Crime**

A Criterion: The Bidder and/or its owners shall not have been convicted of a crime involving bidding on a public works contract in the five years prior to the bid submittal date.

B. Documentation: The Bidder, if and when required as detailed below, shall sign a statement (on a form to be provided by the Contracting Agency) that the Bidder and/or its owners have not been convicted of a crime involving bidding on a public works contract.

7. **Termination for Cause / Termination for Default**

A Criterion: The Bidder shall not have had any public works contract terminated for cause or terminated for default by a government agency in the five years prior to the bid submittal date, unless there are extenuating circumstances and such circumstances are deemed acceptable to the Contracting Agency.

B. Documentation: The Bidder, if and when required as detailed below, shall sign a statement (on a form to be provided by the Contracting Agency) that the Bidder has not had any public works contract terminated for cause or terminated for

default by a government agency in the five years prior to the bid submittal date; or if Bidder was terminated, describe the circumstances. .

8. **Lawsuits**

A Criterion: The Bidder shall not have lawsuits with judgments entered against the Bidder in the five years prior to the bid submittal date that demonstrate a pattern of failing to meet the terms of contracts, unless there are extenuating circumstances and such circumstances are deemed acceptable to the Contracting Agency

B. Documentation: The Bidder, if and when required as detailed below, shall sign a statement (on a form to be provided by the Contracting Agency) that the Bidder has not had any lawsuits with judgments entered against the Bidder in the five years prior to the bid submittal date that demonstrate a pattern of failing to meet the terms of contracts, or shall submit a list of all lawsuits with judgments entered against the Bidder in the five years prior to the bid submittal date, along with a written explanation of the circumstances surrounding each such lawsuit. The Contracting Agency shall evaluate these explanations to determine whether the lawsuits demonstrate a pattern of failing to meet of terms of construction related contracts

As evidence that the Bidder meets the mandatory and supplemental responsibility criteria stated above, the apparent two lowest Bidders must submit to the Contracting Agency by 12:00 P.M. (noon) of the second business day following the bid submittal deadline, a written statement verifying that the Bidder meets all of the mandatory and supplemental criteria together with supporting documentation including but not limited to that detailed above (sufficient in the sole judgment of the Contracting Agency) demonstrating compliance with all mandatory and supplemental responsibility criteria. The Contracting Agency reserves the right to request such documentation from other Bidders as well, and to request further documentation as needed to assess Bidder responsibility. The Contracting Agency also reserves the right to obtain information from third-parties and independent sources of information concerning a Bidder's compliance with the mandatory and supplemental criteria, and to use that information in their evaluation. The Contracting Agency may (but is not required to) consider mitigating factors in determining whether the Bidder complies with the requirements of the supplemental criteria.

The basis for evaluation of Bidder compliance with these mandatory and supplemental criteria shall include any documents or facts obtained by Contracting Agency (whether from the Bidder or third parties) including but not limited to: (i) financial, historical, or operational data from the Bidder; (ii) information obtained directly by the Contracting Agency from others for whom the Bidder has worked, or other public agencies or private enterprises; and (iii) any additional information obtained by the Contracting Agency which is believed to be relevant to the matter.

If the Contracting Agency determines the Bidder does not meet the bidder responsibility criteria above and is therefore not a responsible Bidder, the Contracting Agency shall notify the Bidder in writing, with the reasons for its determination. If the Bidder

disagrees with this determination, it may appeal the determination within two (2) business days of the Contracting Agency's determination by presenting its appeal and any additional information to the Contracting Agency. The Contracting Agency will consider the appeal and any additional information before issuing its final determination. If the final determination affirms that the Bidder is not responsible, the Contracting Agency will not execute a contract with any other Bidder until at least two business days after the Bidder determined to be not responsible has received the Contracting Agency's final determination.

Request to Change Supplemental Bidder Responsibility Criteria Prior To Bid: Bidders with concerns about the relevancy or restrictiveness of the Supplemental Bidder Responsibility Criteria may make or submit requests to the Contracting Agency to modify the criteria. Such requests shall be in writing, describe the nature of the concerns, and propose specific modifications to the criteria. Bidders shall submit such requests to the Contracting Agency no later than five (5) business days prior to the bid submittal deadline and address the request to the Project Engineer or such other person designated by the Contracting Agency in the Bid Documents.

1-02.15 PRE AWARD INFORMATION
(August 14, 2013 APWA GSP)

Revise this section to read:

Before awarding any contract, the Contracting Agency may require one or more of these items or actions of the apparent lowest responsible bidder:

1. A complete statement of the origin, composition, and manufacture of any or all materials to be used,
2. Samples of these materials for quality and fitness tests,
3. A progress schedule (in a form the Contracting Agency requires) showing the order of and time required for the various phases of the work,
4. A breakdown of costs assigned to any bid item,
5. Attendance at a conference with the Engineer or representatives of the Engineer,
6. <u>Obtain, and furnish a copy of, a business license to do business in the city or county where the work is located.</u>
7. Any other information or action taken that is deemed necessary to ensure that the bidder is the lowest responsible bidder.

1-03 AWARD AND EXECUTION OF CONTRACT

1-03.1 CONSIDERATION OF BIDS
(January 23, 2006 APWA GSP)

Revise the first paragraph to read:

After opening and reading proposals, the Contracting Agency will check them for correctness of extensions of the prices per unit and the total price. If a discrepancy exists between the price per unit and the extended amount of any bid item, the price per unit will control. <u>If a minimum bid amount has been established for any item and the</u>

bidder's unit or lump sum price is less than the minimum specified amount, the Contracting Agency will unilaterally revise the unit or lump sum price, to the minimum specified amount and recalculate the extension. The total of extensions, corrected where necessary, including sales taxes where applicable and such additives and/or alternates as selected by the Contracting Agency, will be used by the Contracting Agency for award purposes and to fix the Awarded Contract Price amount and the amount of the contract bond.

1-03.3 EXECUTION OF CONTRACT

(October 1, 2005 APWA GSP)

Revise this section to read:

Copies of the Contract Provisions, including the unsigned Form of Contract, will be available for signature by the successful bidder on the first business day following award. The number of copies to be executed by the Contractor will be determined by the Contracting Agency.

Within 10 calendar days after the award date, the successful bidder shall return the signed Contracting Agency-prepared contract, an insurance certification as required by Section 1-07.18, and a satisfactory bond as required by law and Section 1-03.4. Before execution of the contract by the Contracting Agency, the successful bidder shall provide any pre-award information the Contracting Agency may require under Section 1-02.15.

Until the Contracting Agency executes a contract, no proposal shall bind the Contracting Agency nor shall any work begin within the project limits or within Contracting Agency-furnished sites. The Contractor shall bear all risks for any work begun outside such areas and for any materials ordered before the contract is executed by the Contracting Agency.

If the bidder experiences circumstances beyond their control that prevents return of the contract documents within the calendar days after the award date stated above, the Contracting Agency may grant up to a maximum of 7 additional calendar days for return of the documents, provided the Contracting Agency deems the circumstances warrant it.

1-03.4 CONTRACT BOND

(July 23, 2015 APWA GSP)

Delete the first paragraph and replace it with the following:

The successful bidder shall provide executed payment and performance bond(s) for the full contract amount. The bond may be a combined payment and performance bond; or be separate payment and performance bonds. In the case of separate payment and performance bonds, each shall be for the full contract amount. The bond(s) shall:

1. Be on Contracting Agency-furnished form(s);
2. Be signed by an approved surety (or sureties) that:
    a. Is registered with the Washington State Insurance Commissioner, and

b. Appears on the current Authorized Insurance List in the State of Washington published by the Office of the Insurance Commissioner,

3. Guarantee that the Contractor will perform and comply with all obligations, duties, and conditions under the Contract, including but not limited to the duty and obligation to indemnify, defend, and protect the Contracting Agency against all losses and claims related directly or indirectly from any failure:
   a. Of the Contractor (or any of the employees, subcontractors, or lower tier subcontractors of the Contractor) to faithfully perform and comply with all contract obligations, conditions, and duties, or
   b. Of the Contractor (or the subcontractors or lower tier subcontractors of the Contractor) to pay all laborers, mechanics, subcontractors, lower tier subcontractors, material person, or any other person who provides supplies or provisions for carrying out the work;
4. Be conditioned upon the payment of taxes, increases, and penalties incurred on the project under titles 50, 51, and 82 RCW; and
5. Be accompanied by a power of attorney for the Surety's officer empowered to sign the bond; and
6. Be signed by an officer of the Contractor empowered to sign official statements (sole proprietor or partner). If the Contractor is a corporation, the bond(s) must be signed by the president or vice president, unless accompanied by written proof of the authority of the individual signing the bond(s) to bind the corporation (i.e., corporate resolution, power of attorney, or a letter to such effect signed by the president or vice president).

1-03.7 JUDICIAL REVIEW

(July 23, 2015 APWA GSP)

Revise this section to read:

Any decision made by the Contracting Agency regarding the Award and execution of the Contract or Bid rejection shall be conclusive subject to the scope of judicial review permitted under Washington Law. Such review, if any, shall be timely filed in the Superior Court of <u>the county where the Contracting Agency headquarters is located, provided that where an action is asserted against a county, RCW 36.01.05 shall control venue and jurisdiction</u>.

1-04 SCOPE OF THE WORK

1-04.4 CHANGES

This section is supplemented with the following:

The Contractor is responsible for determining all work, scheduling and cost impacts caused by changes, and shall include such when proposing the price and time for the change. No subsequent requests for compensation or time will be accepted once the change has been approved or the protest period [section 1-04.5] expires.

1-04.6 VARIATION IN ESTIMATED QUANTITIES

This section is supplemented with the following:

If more or fewer materials are needed when the constructed quantity is within plus or minus 25% of the bid quantity, costs for restocking of unused materials, or delivery and

handling costs on additional materials shall be incidental to the bid price and no additional payment will be made.

1-04.7 DIFFERING SITE CONDITIONS (CHANGED CONDITIONS)

This section is supplemented with the following:

The Contractor is responsible for determining all work, scheduling and cost impacts caused by differing site conditions, and shall include such in the proposed price and time for the change. No subsequent requests for compensation or time will be accepted once the change has been approved or the protest period [section 1-04.5] expires.

1-04.11 FINAL CLEANUP

This section is supplemented with the following:

All areas impacted by the work shall be restored to at least original condition, unless specifically identified otherwise in the plans or specifications. All costs are incidental.

1-05 CONTROL OF WORK

CONFORMITY WITH AND DEVIATIONS FROM PLANS AND STAKES

Section 1-05.4 is supplemented with the following:

Contractor Surveying - Roadway

Copies of the Contracting Agency provided primary survey control data are available for the bidder's inspection at the office of the Project Engineer.

The Contractor shall be responsible for setting, maintaining, and resetting all alignment stakes, slope stakes, and grades necessary for the construction of the roadbed, drainage, surfacing, paving, channelization and pavement marking, illumination and signals, guardrails and barriers, and signing. Except for the survey control data to be furnished by the Contracting Agency, calculations, surveying, and measuring required for setting and maintaining the necessary lines and grades shall be the Contractor's responsibility.

The Contractor shall inform the Engineer when monuments are discovered that were not identified in the Plans and construction activity may disturb or damage the monuments. All monuments noted on the plans “DO NOT DISTURB” shall be protected throughout the length of the project or be replaced at the Contractors expense.

Detailed survey records shall be maintained, including a description of the work performed on each shift, the methods utilized, and the control points used. The record shall be adequate to allow the survey to be reproduced. A copy of each day's record shall be provided to the Engineer within three working days after the end of the shift.

The meaning of words and terms used in this provision shall be as listed in "Definitions of Surveying and Associated Terms" current edition, published by the American Congress on Surveying and Mapping and the American Society of Civil Engineers.

The survey work shall include but not be limited to the following:

1. Verify the primary horizontal and vertical control furnished by the Contracting Agency, and expand into secondary control by adding stakes and hubs as well as additional survey control needed for the project. Provide descriptions of secondary control to the Contracting Agency. The description shall include coordinates and elevations of all secondary control points.

2. Establish, the centerlines of all alignments, by placing hubs, stakes, or marks on centerline or on offsets to centerline at all curve points (PCs, PTs, and PIs) and at points on the alignments spaced no further than 50 feet.

3. Establish clearing limits, placing stakes at all angle points and at intermediate points not more than 50 feet apart. The clearing and grubbing limits shall be 5 feet beyond the toe of a fill and 10 feet beyond the top of a cut unless otherwise shown in the Plans.

4. Establish grading limits, placing slope stakes at centerline increments not more than 50 feet apart. Establish offset reference to all slope stakes. If Global Positioning Satellite (GPS) Machine Controls are used to provide grade control, then slope stakes may be omitted at the discretion of the Contractor

5. Establish the horizontal and vertical location of all drainage features, placing offset stakes to all drainage structures and to pipes at a horizontal interval not greater than 25 feet.

6. Establish roadbed and surfacing elevations by placing stakes at the top of subgrade and at the top of each course of surfacing. Subgrade and surfacing stakes shall be set at horizontal intervals not greater than 50 feet in tangent sections, 25 feet in curve sections with a radius less than 300 feet, and at 10-foot intervals in intersection radii with a radius less than 10 feet. Transversely, stakes shall be placed at all locations where the roadway slope changes and at additional points such that the transverse spacing of stakes is not more than 12 feet. If GPS Machine Controls are used to provide grade control, then roadbed and surfacing stakes may be omitted at the discretion of the Contractor.

7. Establish intermediate elevation benchmarks as needed to check work throughout the project.

8. For all other types of construction included in this provision, (including but not limited to channelization and pavement marking, illumination and signals, guardrails and barriers, and signing) provide staking and layout as necessary to adequately locate, construct, and check the specific construction activity.

9. Contractor shall determine if changes are needed to the profiles or roadway sections shown in the Contract Plans in order to achieve proper smoothness and drainage where matching into existing features, such as a smooth transition from new pavement to existing pavement. The Contractor shall submit these changes to the Project Engineer for review and approval 10 days prior to the beginning of work.

The Contractor shall provide the Contracting Agency copies of any calculations and staking data when requested by the Engineer.

To facilitate the establishment of these lines and elevations, the Contracting Agency will provide the Contractor with primary survey control information consisting of descriptions of two primary control points used for the horizontal and vertical control, and descriptions of two additional primary control points for every additional three miles of project length. Primary control points will be described by reference to the project alignment and the coordinate system and elevation datum utilized by the project. In addition, the Contracting Agency will supply horizontal coordinates for the beginning and ending points and for each Point of Intersection (PI) on each alignment included in the project.

The Contractor shall ensure a surveying accuracy within the following tolerances:

	Vertical	Horizontal
Slope stakes	±0.10 feet	±0.10 feet
Subgrade grade stakes set 0.04 feet below grade	±0.01 feet	±0.5 feet (parallel to alignment) ±0.1 feet (normal to alignment)
Stationing on roadway	N/A	±0.1 feet
Alignment on roadway	N/A	±0.04 feet
Surfacing grade stakes	±0.01 feet	±0.5 feet (parallel to alignment) ±0.1 feet (normal to alignment)
Roadway paving pins for surfacing or paving	±0.01 feet	±0.2 feet (parallel to alignment) ±0.1 feet (normal to alignment)

The Contracting Agency may spot-check the Contractor's surveying. These spot-checks will not change the requirements for normal checking by the Contractor.

When staking roadway alignment and stationing, the Contractor shall perform independent checks from different secondary control to ensure that the points staked are within the specified survey accuracy tolerances.

The Contractor shall calculate coordinates for the alignment. The Contracting Agency will verify these coordinates prior to issuing approval to the Contractor for commencing with the work. The Contracting Agency will require up to seven calendar days from the date the data is received.

Contract work to be performed using contractor-provided stakes shall not begin until the stakes are approved by the Contracting Agency. Such approval shall not relieve the Contractor of responsibility for the accuracy of the stakes.

Stakes shall be marked in accordance with Standard Plan A10.10. When stakes are needed that are not described in the Plans, then those stakes shall be marked, at no additional cost to the Contracting Agency as ordered by the Engineer.

Payment

Payment will be made in accordance with Section 1-04.1 for the following bid item when included in the proposal:

"Roadway Surveying", lump sum.

The lump sum contract price for "Roadway Surveying" shall be full pay for all labor, equipment, materials, and supervision utilized to perform the Work specified, including any resurveying, checking, correction of errors, replacement of missing or damaged stakes, and coordination efforts.

1-05.7 REMOVAL OF DEFECTIVE AND UNAUTHORIZED WORK

(October 1, 2005 APWA GSP)

Supplement this section with the following:

If the Contractor fails to remedy defective or unauthorized work within the time specified in a written notice from the Engineer, or fails to perform any part of the work required by the Contract Documents, the Engineer may correct and remedy such work as may be identified in the written notice, with Contracting Agency forces or by such other means as the Contracting Agency may deem necessary.

If the Contractor fails to comply with a written order to remedy what the Engineer determines to be an emergency situation, the Engineer may have the defective and unauthorized work corrected immediately, have the rejected work removed and replaced, or have work the Contractor refuses to perform completed by using Contracting Agency or other forces. An emergency situation is any situation when, in the opinion of the Engineer, a delay in its remedy could be potentially unsafe, or might cause serious risk of loss or damage to the public.

Direct or indirect costs incurred by the Contracting Agency attributable to correcting and remedying defective or unauthorized work, or work the Contractor failed or refused to perform, shall be paid by the Contractor. Payment will be deducted by the Engineer from monies due, or to become due, the Contractor. Such direct and indirect costs shall include in particular, but without limitation, compensation for additional professional services required, and costs for repair and replacement of work of others destroyed or damaged by correction, removal, or replacement of the Contractor's unauthorized work.

No adjustment in contract time or compensation will be allowed because of the delay in the performance of the work attributable to the exercise of the Contracting Agency's rights provided by this Section.

The rights exercised under the provisions of this section shall not diminish the Contracting Agency's right to pursue any other avenue for additional remedy or damages with respect to the Contractor's failure to perform the work as required.

1-05.11 Final Inspection

Delete this section and replace it with the following:

1-05.11 Final Inspections and Operational Testing

(October 1, 2005 APWA GSP)

1-05.11(1) Substantial Completion Date

When the Contractor considers the work to be substantially complete, the Contractor shall so notify the Engineer and request the Engineer establish the Substantial Completion Date. The Contractor's request shall list the specific items of work that remain to be completed in order to reach physical completion. The Engineer will schedule an inspection of the work with the Contractor to determine the status of completion. The Engineer may also establish the Substantial Completion Date unilaterally.

If, after this inspection, the Engineer concurs with the Contractor that the work is substantially complete and ready for its intended use, the Engineer, by written notice to the Contractor, will set the Substantial Completion Date. If, after this inspection the Engineer does not consider the work substantially complete and ready for its intended use, the Engineer will, by written notice, so notify the Contractor giving the reasons therefor.

Upon receipt of written notice concurring in or denying substantial completion, whichever is applicable, the Contractor shall pursue vigorously, diligently and without unauthorized interruption, the work necessary to reach Substantial and Physical Completion. The Contractor shall provide the Engineer with a revised schedule indicating when the Contractor expects to reach substantial and physical completion of the work.

The above process shall be repeated until the Engineer establishes the Substantial Completion Date and the Contractor considers the work physically complete and ready for final inspection.

1-05.11(2) Final Inspection and Physical Completion Date

When the Contractor considers the work physically complete and ready for final inspection, the Contractor by written notice, shall request the Engineer to schedule a final inspection. The Engineer will set a date for final inspection. The Engineer and the Contractor will then make a final inspection and the Engineer will notify the Contractor in writing of all particulars in which the final inspection reveals the work incomplete or unacceptable. The Contractor shall immediately take such corrective measures as are

necessary to remedy the listed deficiencies. Corrective work shall be pursued vigorously, diligently, and without interruption until physical completion of the listed deficiencies. This process will continue until the Engineer is satisfied the listed deficiencies have been corrected.

If action to correct the listed deficiencies is not initiated within 7 days after receipt of the written notice listing the deficiencies, the Engineer may, upon written notice to the Contractor, take whatever steps are necessary to correct those deficiencies pursuant to Section 1-05.7.
The Contractor will not be allowed an extension of contract time because of a delay in the performance of the work attributable to the exercise of the Engineer's right hereunder.

Upon correction of all deficiencies, the Engineer will notify the Contractor and the Contracting Agency, in writing, of the date upon which the work was considered physically complete. That date shall constitute the Physical Completion Date of the contract, but shall not imply acceptance of the work or that all the obligations of the Contractor under the contract have been fulfilled.

1-05.11(3) Operational Testing

It is the intent of the Contracting Agency to have at the Physical Completion Date a complete and operable system. Therefore when the work involves the installation of machinery or other mechanical equipment; street lighting, electrical distribution or signal systems; irrigation systems; buildings; or other similar work it may be desirable for the Engineer to have the Contractor operate and test the work for a period of time after final inspection but prior to the physical completion date. Whenever items of work are listed in the Contract Provisions for operational testing they shall be fully tested under operating conditions for the time period specified to ensure their acceptability prior to the Physical Completion Date. During and following the test period, the Contractor shall correct any items of workmanship, materials, or equipment which prove faulty, or that are not in first class operating condition. Equipment, electrical controls, meters, or other devices and equipment to be tested during this period shall be tested under the observation of the Engineer, so that the Engineer may determine their suitability for the purpose for which they were installed. The Physical Completion Date cannot be established until testing and corrections have been completed to the satisfaction of the Engineer.

The costs for power, gas, labor, material, supplies, and everything else needed to successfully complete operational testing, shall be included in the unit contract prices related to the system being tested, unless specifically set forth otherwise in the proposal.

Operational and test periods, when required by the Engineer, shall not affect a manufacturer's guaranties or warranties furnished under the terms of the contract.

1-05.13 SUPERINTENDENTS, LABOR AND EQUIPMENT OF CONTRACTOR

(August 14, 2013 APWA GSP)

Delete the sixth and seventh paragraphs of this section.

1-05.15 METHOD OF SERVING NOTICES

(March 25, 2009 APWA GSP)
Revise the second paragraph to read:

> All correspondence from the Contractor shall be directed to the Project Engineer. All correspondence from the Contractor constituting any notification, notice of protest, notice of dispute, or other correspondence constituting notification required to be furnished under the Contract, must be in paper format, hand delivered or sent via mail delivery service to the Project Engineer's office. Electronic copies such as e-mails or electronically delivered copies of correspondence will not constitute such notice and will not comply with the requirements of the Contract.

Add the following new section:

1-05.16 Water and Power

(October 1, 2005 APWA GSP)

The Contractor shall make necessary arrangements, and shall bear the costs for power and water necessary for the performance of the work, unless the contract includes power and water as a pay item.

Add the following new section:

1-05.18 Record Drawings

The Contractor shall maintain one set of full size plans for Record Drawings, updated with clear and accurate red-lined field revisions on a daily basis, and within 2 business days after receipt of information that a change in Work has occurred. The Contractor shall not conceal any work until the required information is recorded.

This Record Drawing set shall be used for this purpose alone, shall be kept separate from other Plan sheets, and shall be clearly marked as Record Drawings. These Record Drawings shall be kept on site at the Contractor's field office, and shall be available for review by the Contracting Agency at all times. The Contractor shall bring the Record Drawings to each progress meeting for review.

The preparation and upkeep of the Record Drawings is to be the assigned responsibility of a single, experienced, and qualified individual. The quality of the Record Drawings, in terms of accuracy, clarity, and completeness, is to be adequate to allow the Contracting Agency to modify the computer-aided drafting (CAD) Contract Drawings to produce a complete set of Record Drawings for the Contracting Agency without further investigative effort by the Contracting Agency.

The Record Drawing markups shall document all changes in the Work, both concealed and visible. Items that must be shown on the markups include but are not limited to:

- Actual dimensions, arrangement, and materials used when different than shown in the Plans.
- Changes made by Change Order or Field Order.
- Changes made by the Contractor.
- Accurate locations of storm sewer, sanitary sewer, water mains and other water appurtenances, structures, conduits, light standards, vaults, width of roadways, sidewalks, landscaping areas, building footprints, channelization and pavement markings, etc. Include pipe invert elevations, top of castings (manholes, inlets, etc.).

When the Contract calls for the Contractor to do the surveying/staking, the applicable tolerance limits include, but are not limited to the following:

	Vertical	Horizontal
As-built sanitary & storm invert and grate elevations	± 0.01 foot	± 0.01 foot
As-built monumentation	± 0.001 foot	± 0.001 foot
As-built waterlines, inverts, valves, hydrants	± 0.10 foot	± 0.10 foot
As-built ponds/swales/water features	± 0.10 foot	± 0.10 foot
As-built buildings (fin. Floor elev.)	± 0.01 foot	± 0.10 foot
As-built gas lines, power, TV, Tel, Com	± 0.10 foot	± 0.10 foot
As-built signs, signals, etc.	N/A	± 0.10 foot

Making Entries on the Record Drawings:

- Use erasable colored pencil (not ink) for all markings on the Record Drawings, conforming to the following color code:
- Additions - Red
- Deletions - Green
- Comments - Blue
- Dimensions - Graphite
- Provide the applicable reference for all entries, such as the change order number, the request for information (RFI) number, or the approved shop drawing number.
- Date all entries.
- Clearly identify all items in the entry with notes similar to those in the Contract Drawings (such as pipe symbols, centerline elevations, materials, pipe joint abbreviations, etc.).

The Contractor shall certify on the Record Drawings that said drawings are an accurate depiction of built conditions, and in conformance with the requirements detailed above. The Contractor shall submit final Record Drawings to the Contracting Agency. Contracting Agency acceptance of the Record Drawings is one of the requirements for achieving Physical Completion.

This work shall be incidental to the Contract.

Final pay estimate will not be paid until Record Drawings are provided.

1-05.19 Warranty

The CONTRACTOR shall guarantee the improvements for a period of one year from the date of acceptance against defects in the work as described in the construction drawings and project specifications and otherwise set forth in the contract documents. Contractor shall start work to remedy such defects within seven (7) days of mailing notice of discovery thereof by Owner and shall complete such work within a reasonable time. In emergencies where damage may result from delay or where loss of service may result, such corrections may be made by Owner, in which case the cost shall be borne by Contractor. In the event Contractor does not accomplish corrections at the time specified, the work will be otherwise accomplished and the cost of same shall be paid by Contractor. The CONTRACTOR shall be liable for any and all losses resulting there from including actual damages, engineering, inspection, court costs and attorney's fees in the event the same shall be incurred.

1-06 CONTROL OF MATERIAL

1-06.1 APPROVAL OF MATERIALS PRIOR TO USE

Section 1-06.1 is supplemented with the following:

The Contractor shall submit 2 copies of all QPL's, RAM's, and shop drawings to:
RH2 Engineering, Inc.
300 Simon Street SE, Suite 5
East Wenatchee, Washington 98802
Attn: Erik Howe

1-06.1(4) Fabrication Inspection Expense

(June 27, 2011 APWA GSP)

Delete this section in its entirety.

1-07 LEGAL RELATIONS AND RESPONSIBILITIES TO THE PUBLIC

1-07.1 LAWS TO BE OBSERVED

(October 1, 2005 APWA GSP)

Supplement this section with the following:

In cases of conflict between different safety regulations, the more stringent regulation shall apply.

The Washington State Department of Labor and Industries shall be the sole and paramount administrative agency responsible for the administration of the provisions of the Washington Industrial Safety and Health Act of 1973 (WISHA).

The Contractor shall maintain at the project site office, or other well known place at the project site, all articles necessary for providing first aid to the injured. The Contractor shall establish, publish, and make known to all employees, procedures for ensuring immediate removal to a hospital, or doctor's care, persons, including employees, who may have been injured on the project site. Employees should not be permitted to work on the project site before the Contractor has established and made known procedures for removal of injured persons to a hospital or a doctor's care.

The Contractor shall have sole responsibility for the safety, efficiency, and adequacy of the Contractor's plant, appliances, and methods, and for any damage or injury resulting from their failure, or improper maintenance, use, or operation. The Contractor shall be solely and completely responsible for the conditions of the project site, including safety for all persons and property in the performance of the work. This requirement shall apply continuously, and not be limited to normal working hours. The required or implied duty of the Engineer to conduct construction review of the Contractor's performance does not, and shall not, be intended to include review and adequacy of the Contractor's safety measures in, on, or near the project site.

1-07.2 State Taxes

Delete this section, including its sub-sections, in its entirety and replace it with the following:

1-07.2 State Sales Tax

(June 27, 2011 APWA GSP)

The Washington State Department of Revenue has issued special rules on the State sales tax. Sections 1-07.2(1) through 1-07.2(3) are meant to clarify those rules. The Contractor should contact the Washington State Department of Revenue for answers to questions in this area. The Contracting Agency will not adjust its payment if the Contractor bases a bid on a misunderstood tax liability.

The Contractor shall include all Contractor-paid taxes in the unit bid prices or other contract amounts. In some cases, however, state retail sales tax will not be included. Section 1-07.2(2) describes this exception.

The Contracting Agency will pay the retained percentage (or release the Contract Bond if a FHWA-funded Project) only if the Contractor has obtained from the Washington State Department of Revenue a certificate showing that all contract-related taxes have been paid (RCW 60.28.051). The Contracting Agency may deduct from its payments to the Contractor any amount the Contractor may owe the Washington State Department of Revenue, whether the amount owed relates to this contract or not. Any amount so deducted will be paid into the proper State fund.

1-07.2(1) State Sales Tax — Rule 171

WAC 458-20-171, and its related rules, apply to building, repairing, or improving streets, roads, etc., which are owned by a municipal corporation, or political subdivision of the state, or by the United States, and which are used primarily for foot or vehicular traffic.

This includes storm or combined sewer systems within and included as a part of the street or road drainage system and power lines when such are part of the roadway lighting system. For work performed in such cases, the Contractor shall include Washington State Retail Sales Taxes in the various unit bid item prices, or other contract amounts, including those that the Contractor pays on the purchase of the materials, equipment, or supplies used or consumed in doing the work.

1-07.2(2) State Sales Tax — Rule 170

WAC 458-20-170, and its related rules, apply to the constructing and repairing of new or existing buildings, or other structures, upon real property. This includes, but is not limited to, the construction of streets, roads, highways, etc., owned by the state of Washington; water mains and their appurtenances; sanitary sewers and sewage disposal systems unless such sewers and disposal systems are within, and a part of, a street or road drainage system; telephone, telegraph, electrical power distribution lines, or other conduits or lines in or above streets or roads, unless such power lines become a part of a street or road lighting system; and installing or attaching of any article of tangible personal property in or to real property, whether or not such personal property becomes a part of the realty by virtue of installation.

For work performed in such cases, the Contractor shall collect from the Contracting Agency, retail sales tax on the full contract price. The Contracting Agency will automatically add this sales tax to each payment to the Contractor. For this reason, the Contractor shall not include the retail sales tax in the unit bid item prices, or in any other contract amount subject to Rule 170, with the following exception.

Exception: The Contracting Agency will not add in sales tax for a payment the Contractor or a subcontractor makes on the purchase or rental of tools, machinery, equipment, or consumable supplies not integrated into the project. Such sales taxes shall be included in the unit bid item prices or in any other contract amount.

1-07.2(3) Services

The Contractor shall not collect retail sales tax from the Contracting Agency on any contract wholly for professional or other services (as defined in Washington State Department of Revenue Rules 138 and 244).

ENVIRONMENTAL REGULATIONS

Section 1-07.5 is supplemented with the following:

(September 20, 2010)
Environmental Commitments
The following Provisions summarize the requirements, in addition to those required elsewhere in the Contract, imposed upon the Contracting Agency by the various documents referenced in the Special Provision **Permits and Licenses**. Throughout the work, the Contractor shall comply with the following requirements:

(August 3, 2009)

Payment

All costs to comply with this special provision for the environmental commitments and requirements are incidental to the contract and are the responsibility of the Contractor. The Contractor shall include all related costs in the associated bid prices of the contract.

PERMITS AND LICENSES

Section 1-07.6 is supplemented with the following:

(September 20, 2010)
The Contracting Agency has obtained the below-listed permit(s) for this project. A copy of the permit(s) is attached as an appendix for informational purposes. All contacts with the permitting agency concerning the below-listed permit(s) shall be through the Engineer. The Contractor shall obtain additional permits as necessary. All costs to obtain and comply with additional permits shall be included in the applicable bid items for the work involved. Copies of these permits are required to be onsite at all times.

*** City of Fife Right of Way Permit ***

LOAD LIMITS

Section 1-07.7 is supplemented with the following:

(March 13, 1995)
If the sources of materials provided by the Contractor necessitates hauling over roads other than State Highways, the Contractor shall, at the Contractor's expense, make all arrangements for the use of the haul routes.

CONTRACTOR'S RESPONSIBILITY FOR WORK

Repair of Damage

Section 1-07.13(4) is revised to read:

(August 6, 2001)
The Contractor shall promptly repair all damage to either temporary or permanent work as directed by the Engineer. For damage qualifying for relief under Sections 1-07.13(1), 1-07.13(2) or 1-07.13(3), payment will be made in accordance with Section 1-04.4. Payment will be limited to repair of damaged work only. No payment will be made for delay or disruption of work.

UTILITIES AND SIMILAR FACILITIES

Section 1-07.17 is supplemented with the following:

Locations and dimensions shown in the Plans for existing facilities are in accordance with available information obtained without uncovering, measuring, or other verification.

The Contractor shall attend a mandatory utility preconstruction meeting with the Engineer, all affected Subcontractors, and all utility owners and their Contractors prior to beginning onsite work.

The following addresses and telephone numbers of utility companies or their Contractors that will be adjusting, relocating, replacing or constructing utilities within the project limits are supplied for the Contractor's use:

Outside Agencies

1.	Comcast	(253) 864-4293
2.	Qwest	(253) 597-5192
3.	PSE	(253) 476-6037
4.	Tacoma Power	(253) 502-8600

City of Fife

1.	Utility Maintenance and Operations	(253) 896-8210
2.	Water Department	(253) 896-8210
3.	Sewer/Storm Water Department	(253) -6037

1-07.18 Public Liability and Property Damage Insurance

Delete this section in its entirety, and replace it with the following:

1-07.18 Insurance
(January 4, 2016 APWA GSP)

1-07.18(1) General Requirements

A. The Contractor shall procure and maintain the insurance described in all subsections of section 1-07.18 of these Special Provisions, from insurers with a current A. M. Best rating of not less than A-: VII and licensed to do business in the State of Washington. The Contracting Agency reserves the right to approve or reject the insurance provided, based on the insurer's financial condition.

B. The Contractor shall keep this insurance in force without interruption from the commencement of the Contractor's Work through the term of the Contract and for thirty (30) days after the Physical Completion date, unless otherwise indicated below.

C. If any insurance policy is written on a claims made form, its retroactive date, and that of all subsequent renewals, shall be no later than the effective date of this Contract. The policy shall state that coverage is claims made, and state the retroactive date. Claims-made form coverage shall be maintained by the Contractor for a minimum of 36 months following the Completion Date or earlier termination of this Contract, and the Contractor shall annually provide the Contracting Agency with proof of renewal. If renewal of the claims made form of coverage becomes unavailable, or economically prohibitive, the Contractor shall purchase an extended reporting period ("tail") or execute another form of guarantee acceptable to the Contracting Agency to assure financial responsibility for liability for services performed.

D. The Contractor's Automobile Liability, Commercial General Liability and Excess or Umbrella Liability insurance policies shall be primary and non-contributory insurance as respects the Contracting Agency's insurance, self-insurance, or self-insured pool coverage. Any insurance, self-insurance, or self-insured pool coverage maintained by the Contracting Agency shall be excess of the Contractor's insurance and shall not contribute with it.

E. The Contractor shall provide the Contracting Agency and all additional insureds with written notice of any policy cancellation, within two business days of their receipt of such notice.

F. The Contractor shall not begin work under the Contract until the required insurance has been obtained and approved by the Contracting Agency

G. Failure on the part of the Contractor to maintain the insurance as required shall constitute a material breach of contract, upon which the Contracting Agency may, after giving five business days' notice to the Contractor to correct the breach, immediately terminate the Contract or, at its discretion, procure or renew such insurance and pay any and all premiums in connection therewith, with any sums so expended to be repaid to the Contracting Agency on demand, or at the sole discretion of the Contracting Agency, offset against funds due the Contractor from the Contracting Agency.

H. All costs for insurance shall be incidental to and included in the unit or lump sum prices of the Contract and no additional payment will be made.

1-07.18(2) Additional Insured
All insurance policies, with the exception of Workers Compensation, and of Professional Liability and Builder's Risk (if required by this Contract) shall name the following listed entities as additional insured(s) using the forms or endorsements required herein:

- the Contracting Agency and its officers, elected officials, employees, agents, and volunteers
- RH2 Engineering

The above-listed entities shall be additional insured(s) for the full available limits of liability maintained by the Contractor, irrespective of whether such limits maintained by the Contractor are greater than those required by this Contract, and irrespective of whether the Certificate of Insurance provided by the Contractor pursuant to 1-07.18(4) describes limits lower than those maintained by the Contractor.

For Commercial General Liability insurance coverage, the required additional insured endorsements shall be at least as broad as ISO forms CG 20 10 10 01 for ongoing operations and CG 20 37 10 01 for completed operations.

1-07.18(3) Subcontractors
The Contractor shall cause each Subcontractor of every tier to provide insurance coverage that complies with all applicable requirements of the Contractor-provided insurance as set

forth herein, except the Contractor shall have sole responsibility for determining the limits of coverage required to be obtained by Subcontractors.

The Contractor shall ensure that all Subcontractors of every tier add all entities listed in 1-07.18(2) as additional insureds, and provide proof of such on the policies as required by that section as detailed in 1-07.18(2) using an endorsement as least as broad as ISO CG 20 10 10 01 for ongoing operations and CG 20 37 10 01 for completed operations.

Upon request by the Contracting Agency, the Contractor shall forward to the Contracting Agency evidence of insurance and copies of the additional insured endorsements of each Subcontractor of every tier as required in 1-07.18(4) Verification of Coverage.

1-07.18(4) Verification of Coverage
The Contractor shall deliver to the Contracting Agency a Certificate(s) of Insurance and endorsements for each policy of insurance meeting the requirements set forth herein when the Contractor delivers the signed Contract for the work. Failure of Contracting Agency to demand such verification of coverage with these insurance requirements or failure of Contracting Agency to identify a deficiency from the insurance documentation provided shall not be construed as a waiver of Contractor's obligation to maintain such insurance.

Verification of coverage shall include:

1. An ACORD certificate or a form determined by the Contracting Agency to be equivalent.
2. Copies of all endorsements naming Contracting Agency and all other entities listed in 1-07.18(2) as additional insured(s), showing the policy number. The Contractor may submit a copy of any blanket additional insured clause from its policies instead of a separate endorsement.
3. Any other amendatory endorsements to show the coverage required herein.
4. A notation of coverage enhancements on the Certificate of Insurance shall <u>not</u> satisfy these requirements – actual endorsements must be submitted.

Upon request by the Contracting Agency, the Contractor shall forward to the Contracting Agency a full and certified copy of the insurance policy(s). If Builders Risk insurance is required on this Project, a full and certified copy of that policy is required when the Contractor delivers the signed Contract for the work.

1-07.18(5) Coverages and Limits
The insurance shall provide the minimum coverages and limits set forth below. Contractor's maintenance of insurance, its scope of coverage, and limits as required herein shall not be construed to limit the liability of the Contractor to the coverage provided by such insurance, or otherwise limit the Contracting Agency's recourse to any remedy available at law or in equity.

All deductibles and self-insured retentions must be disclosed and are subject to approval by the Contracting Agency. The cost of any claim payments falling within the deductible or self-insured retention shall be the responsibility of the Contractor. In the event an additional insured incurs a liability subject to any policy's deductibles or self-insured retention, said deductibles or self-insured retention shall be the responsibility of the Contractor.

1-07.18(5)A Commercial General Liability
Commercial General Liability insurance shall be written on coverage forms at least as broad as ISO occurrence form CG 00 01, including but not limited to liability arising from premises, operations, stop gap liability, independent contractors, products-completed operations, personal and advertising injury, and liability assumed under an insured contract. There shall be no exclusion for liability arising from explosion, collapse or underground property damage.

The Commercial General Liability insurance shall be endorsed to provide a per project general aggregate limit, using ISO form CG 25 03 05 09 or an equivalent endorsement.

Contractor shall maintain Commercial General Liability Insurance arising out of the Contractor's completed operations for at least three years following Substantial Completion of the Work.

Such policy must provide the following minimum limits:

$1,000,000	Each Occurrence
$2,000,000	General Aggregate
$2,000,000	Products & Completed Operations Aggregate
$1,000,000	Personal & Advertising Injury each offence
$1,000,000	Stop Gap / Employers' Liability each accident

1-07.18(5)B Automobile Liability
Automobile Liability shall cover owned, non-owned, hired, and leased vehicles; and shall be written on a coverage form at least as broad as ISO form CA 00 01. If the work involves the transport of pollutants, the automobile liability policy shall include MCS 90 and CA 99 48 endorsements.

Such policy must provide the following minimum limit:

$1,000,000	Combined single limit each accident

1-07.18(5)C Workers' Compensation
The Contractor shall comply with Workers' Compensation coverage as required by the Industrial Insurance laws of the State of Washington.

PUBLIC CONVENIENCE AND SAFETY

Construction Under Traffic

Section 1-07.23(1) is supplemented with the following:

(January 2, 2012)
Work Zone Clear Zone
The Work Zone Clear Zone (WZCZ) applies during working and nonworking hours. The WZCZ applies only to temporary roadside objects introduced by the Contractor's operations and does not apply to preexisting conditions or permanent Work. Those work operations that are actively in progress shall be

in accordance with adopted and approved Traffic Control Plans, and other contract requirements.

During nonworking hours equipment or materials shall not be within the WZCZ unless they are protected by permanent guardrail or temporary concrete barrier. The use of temporary concrete barrier shall be permitted only if the Engineer approves the installation and location.

During actual hours of work, unless protected as described above, only materials absolutely necessary to construction shall be within the WZCZ and only construction vehicles absolutely necessary to construction shall be allowed within the WZCZ or allowed to stop or park on the shoulder of the roadway.

The Contractor's nonessential vehicles and employees private vehicles shall not be permitted to park within the WZCZ at any time unless protected as described above.

Deviation from the above requirements shall not occur unless the Contractor has requested the deviation in writing and the Engineer has provided written approval.

Minimum WZCZ distances are measured from the edge of traveled way and will be determined as follows:

Regulatory Posted Speed	Distance From Traveled Way (Feet)
35 mph or less	10 *
40 mph	15
45 to 55 mph	20
60 mph or greater	30

* or 2-feet beyond the outside edge of sidewalk

Minimum Work Zone Clear Zone Distance

Add the following new section:

1-07.23(3) Temporary Road Closures

Closures to through traffic on the 70th Avenue will not be allowed unless approved by the Engineer.

The Contractor shall phase work to allow at least one pedestrian accessible route along 26th and 70th Avenue at all times.

Local access to the businesses, individual residences and emergency vehicle access shall be maintained at all times. The Contractor shall maintain all necessary construction signs during non-working hours.

The Contractor shall maintain driveway approach access to adjacent businesses and properties at all times. This includes temporary construction and maintenance of gravel approaches as well as construction of concrete driveway approaches half at a time (unless otherwise agreed upon by the property owner and Engineer) with sufficient cure time between concrete pours as defined in the standard specifications. The Contractor shall coordinate construction of driveway approaches with individual property owners and provide a minimum of 2 business days notice prior to driveway approach construction.

1-07.24 RIGHTS OF WAY

(July 23, 2015 APWA GSP)

Delete this section and replace it with the following:

Street Right of Way lines, limits of easements, and limits of construction permits are indicated in the Plans. The Contractor's construction activities shall be confined within these limits, unless arrangements for use of private property are made.

Generally, the Contracting Agency will have obtained, prior to bid opening, all rights of way and easements, both permanent and temporary, necessary for carrying out the work. Exceptions to this are noted in the Bid Documents or will be brought to the Contractor's attention by a duly issued Addendum.

Whenever any of the work is accomplished on or through property other than public Right of Way, the Contractor shall meet and fulfill all covenants and stipulations of any easement agreement obtained by the Contracting Agency from the owner of the private property. Copies of the easement agreements may be included in the Contract Provisions or made available to the Contractor as soon as practical after they have been obtained by the Engineer.

Whenever easements or rights of entry have not been acquired prior to advertising, these areas are so noted in the Plans. The Contractor shall not proceed with any portion of the work in areas where right of way, easements or rights of entry have not been acquired until the Engineer certifies to the Contractor that the right of way or easement is available or that the right of entry has been received. If the Contractor is delayed due to acts of omission on the part of the Contracting Agency in obtaining easements, rights of entry or right of way, the Contractor will be entitled to an extension of time. The Contractor agrees that such delay shall not be a breach of contract.

Each property owner shall be given 48 hours notice prior to entry by the Contractor. This includes entry onto easements and private property where private improvements must be adjusted.

The Contractor shall be responsible for providing, without expense or liability to the Contracting Agency, any additional land and access thereto that the Contractor may desire for temporary construction facilities, storage of materials, or other Contractor needs. However, before using any private property, whether adjoining the work or not, the Contractor shall file with the Engineer a written permission of the private property

owner, and, upon vacating the premises, a written release from the property owner of each property disturbed or otherwise interfered with by reasons of construction pursued under this contract. The statement shall be signed by the private property owner, or proper authority acting for the owner of the private property affected, stating that permission has been granted to use the property and all necessary permits have been obtained or, in the case of a release, that the restoration of the property has been satisfactorily accomplished. The statement shall include the parcel number, address, and date of signature. Written releases must be filed with the Engineer before the Completion Date will be established.

1-08 PROSECUTION AND PROGRESS

Add the following new section:

1-08.0 Preliminary Matters

(May 25, 2006 APWA GSP)

Add the following new section:

1-08.0(1) Preconstruction Conference

(October 10, 2008 APWA GSP)

Prior to the Contractor beginning the work, a preconstruction conference will be held between the Contractor, the Engineer and such other interested parties as may be invited. The purpose of the preconstruction conference will be:

1. To review the initial progress schedule;
2. To establish a working understanding among the various parties associated or affected by the work;
3. To establish and review procedures for progress payment, notifications, approvals, submittals, etc.;
4. To establish normal working hours for the work;
5. To review safety standards and traffic control; and
6. To discuss such other related items as may be pertinent to the work.

The Contractor shall prepare and submit at the preconstruction conference the following:

1. A breakdown of all lump sum items;
2. A preliminary schedule of working drawing submittals; and
3. A list of material sources for approval if applicable.

Add the following new section:

1-08.0(2) Hours of Work

(December 8, 2014 APWA GSP)

Except in the case of emergency or unless otherwise approved by the Engineer, the normal working hours for the Contract shall be any consecutive 8-hour period between 7:00 a.m. and 6:00 p.m. Monday through Friday, exclusive of a lunch break. If the Contractor desires different than the normal working hours stated above, the request

must be submitted in writing prior to the preconstruction conference, subject to the provisions below. The working hours for the Contract shall be established at or prior to the preconstruction conference.

All working hours and days are also subject to local permit and ordinance conditions (such as noise ordinances).

If the Contractor wishes to deviate from the established working hours, the Contractor shall submit a written request to the Engineer for consideration. This request shall state what hours are being requested, and why. Requests shall be submitted for review no later than ***two (2) working days*** prior to the day(s) the Contractor is requesting to change the hours.

If the Contracting Agency approves such a deviation, such approval may be subject to certain other conditions, which will be detailed in writing. For example:

1. On non-Federal aid projects, requiring the Contractor to reimburse the Contracting Agency for the costs in excess of straight-time costs for Contracting Agency representatives who worked during such times. (The Engineer may require designated representatives to be present during the work. Representatives who may be deemed necessary by the Engineer include, but are not limited to: survey crews; personnel from the Contracting Agency's material testing lab; inspectors; and other Contracting Agency employees or third party consultants when, in the opinion of the Engineer, such work necessitates their presence.)
2. Considering the work performed on Saturdays, Sundays, and holidays as working days with regard to the contract time.
3. Considering multiple work shifts as multiple working days with respect to contract time even though the multiple shifts occur in a single 24-hour period.
4. If a 4-10 work schedule is requested and approved the non working day for the week will be charged as a working day.
5. If Davis Bacon wage rates apply to this Contract, all requirements must be met and recorded properly on certified payroll

1-08.4 PROSECUTION OF WORK

Delete this section and replace it with the following:

1-08.4 Notice to Proceed and Prosecution of Work

(July 23, 2015 APWA GSP)

Notice to Proceed will be given after the contract has been executed and the contract bond and evidence of insurance have been approved and filed by the Contracting Agency. The Contractor shall not commence with the work until the Notice to Proceed has been given by the Engineer. The Contractor shall commence construction activities on the project site within ten days of the Notice to Proceed Date, unless otherwise approved in writing. The Contractor shall diligently pursue the work to the physical completion date within the time specified in the contract. Voluntary shutdown or slowing

of operations by the Contractor shall not relieve the Contractor of the responsibility to complete the work within the time(s) specified in the contract.

When shown in the Plans, the first order of work shall be the installation of high visibility fencing to delineate all areas for protection or restoration, as described in the Contract. Installation of high visibility fencing adjacent to the roadway shall occur after the placement of all necessary signs and traffic control devices in accordance with 1-10.1(2). Upon construction of the fencing, the Contractor shall request the Engineer to inspect the fence. No other work shall be performed on the site until the Contracting Agency has accepted the installation of high visibility fencing, as described in the Contract.

The first sentence of Section 1-08.4 is revised to read:

(August 7, 2006)
The Contractor shall begin work no earlier than the begin work date stated in the written notice provided by the Engineer. The Engineer will provide a minimum of 10 calendar days written notice for the date identified as the first working day.

1-08.5 TIME FOR COMPLETION

(August 14, 2013 APWA GSP, Option A)

Revise the third and fourth paragraphs to read:

Contract time shall begin on the first working day following <u>the Notice to Proceed Date</u>.

Each working day shall be charged to the contract as it occurs, until the contract work is physically complete. If substantial completion has been granted and all the authorized working days have been used, charging of working days will cease. Each week the Engineer will provide the Contractor a statement that shows the number of working days: (1) charged to the contract the week before; (2) specified for the physical completion of the contract; and (3) remaining for the physical completion of the contract. The statement will also show the nonworking days and any partial or whole day the Engineer declares as unworkable. Within 10 calendar days after the date of each statement, the Contractor shall file a written protest of any alleged discrepancies in it. To be considered by the Engineer, the protest shall be in sufficient detail to enable the Engineer to ascertain the basis and amount of time disputed. By not filing such detailed protest in that period, the Contractor shall be deemed as having accepted the statement as correct. <u>If the Contractor is approved to work 10 hours a day and 4 days a week (a 4-10 schedule) and the fifth day of the week in which a 4-10 shift is worked would ordinarily be charged as a working day then the fifth day of that week will be charged as a working day whether or not the Contractor works on that day.</u>

Revise the sixth paragraph to read:

The Engineer will give the Contractor written notice of the completion date of the contract after all the Contractor's obligations under the contract have been performed by

the Contractor. The following events must occur before the Completion Date can be established:

1. The physical work on the project must be complete; and
2. The Contractor must furnish all documentation required by the contract and required by law, to allow the Contracting Agency to process final acceptance of the contract. The following documents must be received by the Project Engineer prior to establishing a completion date:
   a. Certified Payrolls (per Section 1-07.9(5)).
   b. Material Acceptance Certification Documents
   c. Quarterly Reports of Amounts Credited as DBE Participation, as required by the Contract Provisions.
   d. Final Contract Voucher Certification
   e. Copies of the approved "Affidavit of Prevailing Wages Paid" for the Contractor and all Subcontractors
   f. Property owner releases per Section 1-07.24

Section 1-08.5 is supplemented with the following:

(March 13, 1995)
This project shall be physically completed within *** $$ 40 $$ *** working days.

1-08.6 SUSPENSION OF WORK

Section 1-08.6 is supplemented with the following:

Contract time may be suspended for the procurement of critical materials (Procurement Suspension). The City is providing the signal cabinet and controller. If this equipment is not available at the time the Contractor intends to install this equipment, a Procurement Suspension will be issued by the Contracting Agency.

Charging of Contract time will resume upon the delivery of the critical materials to the Contractor or notification that the critical materials are ready for delivery to the Contractor is provided by the Contracting Agency.

1-09 MEASUREMENT AND PAYMENT

WEIGHING EQUIPMENT

1-09.2(1) GENERAL REQUIREMENTS FOR WEIGHING EQUIPMENT

(July 23, 2015 APWA GSP, Option 2)

Revise item 4 of the fifth paragraph to read:

4. Test results and scale weight records for each day's hauling operations are provided to the Engineer daily. Reporting shall utilize WSDOT form 422-027, Scaleman's Daily Report, unless the printed ticket contains the same information that is on the

Scaleman's Daily Report Form. The scale operator must provide AM and/or PM tare weights for each truck on the printed ticket.

1-09.6 FORCE ACCOUNT

(October 10, 2008 APWA GSP)

Supplement this section with the following:

The Contracting Agency has estimated and included in the Proposal, dollar amounts for all items to be paid per force account, only to provide a common proposal for Bidders. All such dollar amounts are to become a part of Contractor's total bid. However, the Contracting Agency does not warrant expressly or by implication, that the actual amount of work will correspond with those estimates. Payment will be made on the basis of the amount of work actually authorized by Engineer.

1-09.9 PAYMENTS

(March 13, 2012 APWA GSP)

Delete the first four paragraphs and replace them with the following:

The basis of payment will be the actual quantities of Work performed according to the Contract and as specified for payment.

The Contractor shall submit a breakdown of the cost of lump sum bid items at the Preconstruction Conference, to enable the Project Engineer to determine the Work performed on a monthly basis. A breakdown is not required for lump sum items that include a basis for incremental payments as part of the respective Specification. Absent a lump sum breakdown, the Project Engineer will make a determination based on information available. The Project Engineer's determination of the cost of work shall be final.

Progress payments for completed work and material on hand will be based upon progress estimates prepared by the Engineer. A progress estimate cutoff date will be established at the preconstruction conference.

The initial progress estimate will be made not later than 30 days after the Contractor commences the work, and successive progress estimates will be made every month thereafter until the Completion Date. Progress estimates made during progress of the work are tentative, and made only for the purpose of determining progress payments. The progress estimates are subject to change at any time prior to the calculation of the final payment.

The value of the progress estimate will be the sum of the following:

1. Unit Price Items in the Bid Form — the approximate quantity of acceptable units of work completed multiplied by the unit price.
2. Lump Sum Items in the Bid Form — based on the approved Contractor's lump sum breakdown for that item, or absent such a breakdown, based on the Engineer's determination.

3. Materials on Hand — 100 percent of invoiced cost of material delivered to Job site or other storage area approved by the Engineer.
4. Change Orders — entitlement for approved extra cost or completed extra work as determined by the Engineer.

Progress payments will be made in accordance with the progress estimate less:
1. Retainage per Section 1-09.9(1), on non FHWA-funded projects;
2. The amount of progress payments previously made; and
3. Funds withheld by the Contracting Agency for disbursement in accordance with the Contract Documents.

Progress payments for work performed shall not be evidence of acceptable performance or an admission by the Contracting Agency that any work has been satisfactorily completed. The determination of payments under the contract will be final in accordance with Section 1-05.1.

1-10 TEMPORARY TRAFFIC CONTROL

TRAFFIC CONTROL MANAGEMENT

Section 1-10.2(1) is supplemented with the following:

(January 8, 2016)
Only training with WSDOT TCS card and WSDOT training curriculum is recognized in the State of Washington. The Traffic Control Supervisor shall be certified by one of the following:

The Northwest Laborers-Employers Training Trust
27055 Ohio Ave.
Kingston, WA 98346
(360) 297-3035

Evergreen Safety Council
12545 135th Ave. NE
Kirkland, WA 98034-8709
1-800-521-0778 or
(425) 814-3930

The American Traffic Safety Services Association
15 Riverside Parkway, Suite 100
Fredericksburg, Virginia 22406-1022
Training Dept. Toll Free (877) 642-4637
Phone: (540) 368-1701

1-10.2(1)B Traffic Control Supervisor

The last paragraph is revised to read:
The TCS may perform the Work described in Section 1-10.3(1)A Flaggers or in Section 1-10.3(1)B Other Traffic Control Labor, however, all compensation shall be

included in the lump sum bid price for Traffic Control Supervisor. If TCS duties are not be performed to the satisfaction of the Engineer, this provision will be revoked.

TRAFFIC CONTROL LABOR, PROCEDURES AND DEVICES

1-10.3(1)B Other Traffic Control Labor

This section is supplemented with the following:

Personnel needed to ensure construction equipment is operating without encroaching into traveled ways and/or needed to guide construction equipment through the workzone shall be incidental to the project.

MEASUREMENT

Section 1-10.4(1) is supplemented with the following:

(August 2, 2004)

The proposal contains the item “Project Temporary Traffic Control”, lump sum. The provisions of Section 1-10.4(1) shall apply.

END DIVISION 1

DIVISION 2
EARTHWORK

2-02 REMOVAL OF STRUCTURES AND OBSTRUCTIONS

2-02.3 Construction Requirements

Section 2-02.3 is supplemented with the following:

Removal of Obstructions

This work shall consist of removing and disposing of, or salvaging various existing improvements within the construction limits shown on the plans including, but not limited to:

Item
Existing vegetation or hardscape within trench limits
Removing conflicting pavement markings
Existing signal equipment no longer needed after signal modifications

Unless otherwise noted, all existing utilities in conflict of the proposed improvements shall be taken out of service and removed from the project site.

Where it is required that an existing utility pipe be abandoned in place, the pipe ends shall be plugged in accordance with Section 7-08.3(4). All utility structures shall be removed or abandoned in accordance with Section 7-05.3(2).

Salvage of Removed Structure Items

Unless otherwise indicated on the Plans or in the Special Provisions, the following shall be carefully salvaged and stored for the Contracting Agency to pick up.

1. Signal equipment
2. Signs
3. Other material of recoverable value as determined by the Engineer.

Materials and items deemed of no value by the Engineer shall be removed and become property of the Contractor.

2-02.3(3) Removal of Pavement, Sidewalks, Curbs, and Gutters

Item 1 of Section 2-02.3(3) is replaced with the following:

> Arrange to dispose of waste at no expense to the Contracting Agency and any such disposal shall meet the requirement of section 2-03.3(7)C of the Standard Specifications.

2-07 WATERING

2-07.1 Description

Section 2-07.1 is supplemented with the following:

The Contractor shall take special precautions to control dust at all times throughout the entire project. This also includes watering on weekends and holidays. Watering, or other approved dust control measures will be required whenever dust conditions are present on the roadway, on adjacent streets when dust results from construction activities, and on cut and fill slopes as determined by the Engineer. The contractor shall obtain his own source of water at their expense.

2-07.2 Watering for Compaction

Add the following new section:

Contractor shall provide watering as necessary to achieve optimal moisture content for compaction. Cost for watering shall be incidental to the contract. The Contractor shall coordinate with the water purveyor to provide a meter setup for construction water, if a source is available. The maximum flow rate allowed from this meter may be restricted at the purveyor's discretion. The Contractor is responsible for protection of the meter assembly from theft, vandalism, damage, and freezing.

2-07.5 Payment

Section 2-07.5 is supplemented with the following:

All costs for watering shall be included in the other Contract pay items. Water for force account work shall only be included as it applies to the specific force account item (i.e. compaction). Water for dust control shall NOT be included as a force account item.

2-09 STRUCTURE EXCAVATION

2-09.5 Payment

Section 2-09.5 is supplemented with the following:

"Structure Excavation Class B"

All costs for Structure Excavation Class B shall be included in the unit contract price for the various drainage and utility items included in the contract.

END DIVISION 2

DIVISION 8
MISCELLANEOUS CONSTRUCTION

8-01 EROSION CONTROL AND WATER POLLUTION CONTROL

8-01.1 Description

Section 8-01.1 is SUPPLEMENTED with the following:

Watering for dust control shall NOT be considered erosion control and water pollution control. See Section 2-07 in these Special Provisions.

The Contractor shall install and maintain all temporary and permanent erosion control measures and Best Management Practices (BMPs) in accordance with the Bid Documents, Plans, Standard Specifications, Permit Conditions and as directed by the City.

The Contractor shall submit his or her own Temporary Erosion / Water Pollution Control Plan to the City for review and approval prior to the commencement of clearing, grubbing or grading activities.

The Contractor shall design the project specific TEWPC Plan utilizing the BMP's described in the WSDOT Highway Runoff Manual (2004) or City Standards, whichever are more stringent. Provide one-week minimum for City review and approval of the Plan. Clearing activities may not commence until the Plan has been approved by the City. All costs associated with preparing the TESC Plan shall be considered incidental to and included in other Bid items.

8-01.3 Construction Requirements

Section 8-01.3 is SUPPLEMENTED with the following:

The Contractor shall bear sole responsibility for damage to completed portions of the project and to property located off the project caused by erosion, siltation, runoff, or other related items during the construction of the project. The Contractor shall also bear sole responsibility for any pollution of rivers, streams, groundwater, or other water that may occur as a result of construction operations. Any area not covered with established, stable vegetation where no further work is anticipated for a period of 15 days, shall be immediately stabilized with the approved erosion and sedimentation control methods (e.g., seeding and mulching, straw, plastic sheet). Where seeding for temporary erosion control is required, fast germinating grasses shall be applied at an appropriate rate (e.g., perennial rye applied at approximately 80 pounds per acre). At no time shall more than one foot of sediment be allowed to accumulate within a catch basin. All catch basins and conveyance lines shall be cleaned at a time designated by the City Construction Inspector. The cleaning operation shall not flush sediment-laden water into the downstream system. The cleaning shall be conducted using an approved vacuum truck capable of jet rodding the lines. The collection and disposal of the sediment shall be the responsibility of the Contractor at no cost to the City of Fife.

If at any time during the life of this Contract the Contractor requests to suspend work due to weather conditions or other constraints, it shall be the Contractor's responsibility to

meet the Temporary Erosion/Water Pollution Control requirements of the Bid Documents, including maintenance and repair of BMPs already installed, at all times during suspension.

8-01.3(8) Street Cleaning

Section 8-01.3(8) is supplemented with the following:
The roadway shall be swept daily and as needed. Flushing will not be permitted. Roadway sweeping and cleaning shall be considered included in the lump sum "Erosion/Water Pollution Control" and no additional payment will be made.

8-01.3(9)D Inlet Protection

Section 8-01.3(9)D is supplemented with the following:
Inlet protection can be in the form of internal devices and shall be installed prior to clearing, grubbing or earthwork activities. Catch Basin Inserts shall be installed on existing catch basins within the project area and those immediately downstream of the project site that could possibly receive sediment laden runoff for the site. They shall be installed and meet the requirements specified on the Plans. Simply placing a piece of geotextile under the catch basin grate is not acceptable. When the depth of accumulated sediment and debris reaches approximately one-half the height of an internal device or one-third the height of the external device (or less if so specified by the manufacturers), the deposits shall be removed. Contractor shall be responsible for removing catch basin inserts upon completion of the project.

8-01.3(16) Removal

Section 8-01.3(16) is supplemented with the following:
The Contractor shall removal all Temporary Erosion/Water Pollution Control BMPs within twenty (20) days after final slope stabilization, landscape restoration, or after the BMPs are no longer needed. Trapped sediment shall be removed or stabilized on site.

8-01.4 Measurement

Section 8-01.4 is supplemented with the following:
No unit of measurement shall apply to the lump sum item for "Erosion/Water Pollution Control".

8-01.5 Payment

Section 8-01.5 is supplemented with the following:
"Erosion/Water Pollution Control", lump sum.
The lump sum bid price for "Erosion/Water Pollution Control" shall constitute full pay for all labor, materials, tools, and equipment necessary and incidental to the installation of erosion and sediment control facilities including, but not limited to, Erosion and sedimentation control installation and maintenance replacement and removal as required until project completion and approval; Maintenance of catch basins, storm drains, ditches, and other drainage courses, including immediate removal and disposal of accumulated sedimentation; Developing an approved Temporary Erosion/Water Pollution Control Plan.

8-02 ROADSIDE RESTORATION

8-02.3 Construction Requirements

Section 8-02.3 is SUPPLEMENTED with the following:

Contractor shall restore all disturbed areas to existing or better condition with like materials.

8-02.5 Payment

Section 8-02.5 is SUPPLEMENTED with the following:

All costs for restoring disturbed areas shall be incidental to the Contract.

8-20 ILLUMINATION, TRAFFIC SIGNAL SYSTEMS, AND ELECTRICAL

8-20.2 Materials

Section 8-20.2 is supplemented with the following:

Conduit, Innerduct, and Outerduct

Section 9-29.1 is supplemented with the following:
(NWR August 10, 2009)

Conduit Sealing

Mechanical plugs for cabinet conduit sealing shall be one of the following:

1. Tyco Electronics - TDUX
2. Jackmoon – Triplex Duct Plugs
3. O-Z Gedney – Conduit Sealing Bushings

The mechanical plug shall withstand a minimum of 5 psi of pressure.

Rigid Metal Conduit Fittings and Appurtenances

Section 9-29.1(2) is supplemented with the following:

(August 10, 2009)

Conduit Coatings

Electroplated couplings are not allowed.

(NWR March 4, 2009)

Surface Mounting Conduit Attachment Components

Channel supports and all fastening hardware components shall be Type 304 stainless steel. Conduit clamps shall be one piece, two bolt units with lock washers.

Junction Boxes, Cable Vaults, and Pull Boxes

Standard Duty Junction Boxes

Section 9-29.2(1)A is supplemented with the following:

(January 7, 2013)
Concrete Junction Boxes
Both the slip-resistant lid and slip-resistant frame shall be treated with Mebac#1 as manufactured by IKG industries, or SlipNOT Grade 3-coarse as manufactured by W.S. Molnar Co. Where the exposed portion of the frame is ½ inch wide or less the slip-resistant treatment may be omitted on that portion of the frame. The slip-resistant lid shall be identified with permanent marking on the underside indicating the type of surface treatment ("M1" for Mebac#1; or "S3" for SlipNOT Grade 3-coarse) and the year manufactured. The permanent marking shall be $^1/_8$ inch line thickness formed with a stainless steel weld bead.

Standard Duty Cable Vaults and Pull Boxes
Section 9-29.2(2)A is supplemented with the following:

(January 7, 2013)
Both the slip-resistant lid and slip-resistant frame shall be treated with Mebac#1 as manufactured by IKG industries, or SlipNOT Grade 3-coarse as manufactured by W.S. Molnar Co. Where the exposed portion of the frame is ½ inch wide or less the slip-resistant treatment may be omitted on that portion of the frame. The slip-resistant lid shall be identified with permanent marking on the underside indicating the type of surface treatment ("M1" for Mebac#1; or "S3" for SlipNOT Grade 3-coarse) and the year manufactured. The permanent marking shall be $^1/_8$ inch line thickness formed with a stainless steel weld bead.

Cover Markings
Section 9-29.2(4) is supplemented with the following:

Junction Box Identification
Junction boxes, pull boxes and cable vaults containing only Traffic Signal Interconnect (fiber optics) cable shall be marked or embossed with the legend "COMM".

Light And Signal Standards
Section 9-29.6 is supplemented with the following:

Traffic Signal Standards
Traffic signal standards shall be furnished and installed in accordance with the methods and materials noted in the applicable Standard Plans, pre-approved plans, or special design plans.

All welds shall comply with the latest AASHTO Standard Specifications for Structural Supports for Highway Signs, Luminaires and Traffic Signals. Welding inspection shall comply with Section 6-03.3(25)A Welding Inspection.

Hardened washers shall be used with all signal arm connecting bolts instead of lockwashers. All signal arm ASTM A 325 connecting bolts tightening shall comply with Section 6-03.3(33).

Traffic signal standard types and applicable characteristics are as follows:

Type PPB Pedestrian push button posts shall conform to Standard Plan J-20.10 or to one of the following pre-approved plans:

Fabricator	Drawing No.
Northwest Signal Supply Inc.	NWS 3565
Valmont Ind. Inc.	DB00655 Rev. L Sheet's 1, 2 & 3 of 3
Ameron Pole Prod. Div.	WA10TR-1 Rev. F and WAPPBPBA Rev. B
Union Metal Corp.	TA-10035 Rev. R8 Sht. 1
West Coast Engineering Group	WSDOT-PP-01 Rev. 1
KW Industries	10-200-PED-1 Rev. 9, Sheets 1, 2 and 3

Type PS Pedestrian signal standards shall conform to Standard Plan J-20.16 or to one of the following pre-approved plans:

Fabricator	Drawing No.
Northwest Signal Supply Inc.	NWS 3540 Rev. 4 and NWS 3540B Rev. 4
Valmont Ind. Inc.	DB00655 Rev. L Sht. 1, 2 & 3 of 3
Ameron Pole Prod. Div.	WA10TR-1 Rev. F and WA10TR-2 Rev. C
Union Metal Corp.	TA-10025 Rev. R18 Sht. 1 & 2
West Coast Engineering Group	WSDOT-PP-02 Rev. 1
American Pole Structures, Inc.	WS-PP-03 Rev. 1D
KW Industries	10-200-PED-1

Rev. 9, Sheets 1, 2 and 3

Foundations for various types of standards shall be as follows:

Type PPB	As noted on Standard Plan J-20.10
Type PS	As noted on Standard Plan J-21.10

Steel Light and Signal Standards
Section 9-29.6(1) is supplemented with the following:

(NWR May 1, 2006)
Light and Signal Standard Painting
Galvanized steel light and signal standards shall not be painted.

Electrical Splice Materials

Traffic Signal Splice Material
Section 9-29.12(2) is supplemented with the following:

(NWR March 1, 2011)
Induction loop splices shall be either the heat shrink type or the re-enterable type with end cap seals.

Controller Cabinet Assemblies

Emergency Preemption
Section 9-29.13(6) is supplemented with the following:

(NWR August 10, 2009)
Preemption:
The system shall be capable of preempting the controller to the phases shown in the Plans when a signal is received from the field detector.

Pre-emption equipment shall be either Opticom or Tomar.

Opticom
If Opticom pre-emption equipment is used, the Contractor shall furnish and install the following:

1. Pre-emption detectors shall be Opticom Model 711.

2. Discriminators shall be four-channel model 454 units. One is required at each controller.

In addition, where auxiliary Opticom pre-emption is used, the Contractor shall furnish and install the following:

3. A 757 auxiliary optical detector wiring harness where more than one detector is called for per channel.

4. A twelve position terminal block of the barrier type rated for 20A at 600 volts RMS minimum and meeting the requirements of Chapter 11 of the Type 170 Hardware Specification, FHWA IP-78-16 as currently amended.

Tomar
Tomar equipment is allowed provided that it is able to receive and respond to Opticom emitter signals.

If Tomar equipment is used, the Contractor shall furnish and install the following:

1. Pre-emption detectors shall be Tomar Model 2091-SD complete with mount and mounting hardware.

2. Discriminators shall be Tomar Model 3080 four-channel units. One is required per controller.

3. The Contractor shall make all initial range adjustments.

4. The pre-emption function operation tests shall be performed using an Opticom emitter.

(NWR November 16, 1995)
Emergency Preemption Hardwire:
Emergency preemption hardwire equipment installed by this contract shall activate the Emergency Preemption Logic in the traffic signal controller when a signal is received from a dry contact closure.

The contact closure shall be activated by a 120-volt input that is isolated from all controller circuitry.

The equipment used to provide the contact closure shall be housed in a separate enclosure located within the controller cabinet.

NEMA, Type 170E, 2070 Controllers and Cabinets

Section 9-29.13(10)Ais supplemented with the following:

NEMA Traffic Actuated Controllers

The Contracting agency will provide the signal controller for the Contractor to install.

NEMA Controller Cabinets
Section 9-29.13(10)C is supplemented with the following:

The Contracting Agency will provide the signal cabinet for the Contractor to install.

1. Cabinet and components will be NEMA TS1P cabinet with backdoor, Western Systems constructed part #2510015000 after WSDOT Olympic Region Standards.

Vehicular Signal Heads, Displays and Housing

Section 9-29.16 is supplemented with the following:

(NWR February 11, 2013)
Back Plate
Back plates shall be constructed of louvered anodized aluminum.

(NWR March 8, 2000)
Fiber Optic Signal Head
A 12-inch fiber optic signal section capable of alternately displaying a yellow arrow and a green arrow shall be furnished and installed where specified in the Plans.

Conventional Traffic Signal Heads

Optical Units
Section 9-29.16(2)A is supplemented with the following:

(NWR March 8, 2004)
LED Signal Displays
All traffic signal displays shall be the Light Emitting Diode (LED) type and shall be from one of the following manufacturers:

Dialight Corporation
1913 Atlantic Avenue
Manasquan, NJ 08736
Telephone: (732) 223-9400
Fax: (732) 223-8788

GELcore, LLC
6810 Halle Drive
Valley View, OH 44125
Telephone: (216) 606-6555
Fax: (216) 606-6556

Precision Solar Controls, Inc.
2960 Market Street
Garland, TX 75041

Telephone: (972) 278-0553
Fax: (972) 271-9583

Each LED signal module shall be designed to be installed in the door frame of a standard traffic signal housing. The lamp socket, reflector holder and lens used with an incandescent lamp shall not be used in a signal section in which a LED signal module is installed. The installation of a LED signal module shall not require any modification to the housing. The LED signal module shall be a single, self-contained device, not requiring onsite assembly for installation into an existing traffic signal housing.

All red and yellow LED signal modules shall be manufactured with a matrix of AlInGaP LED light sources and green LED signal modules shall be manufactured with a matrix of InGaN LED light sources. The LED traffic signal module shall be operationally compatible with controllers and conflict monitors on this project. The LED lamp unit shall contain a disconnect that will show an open switch to the conflict monitor when less than 60% of the LEDs in the unit are operational.

Each LED module shall conform to the current standards in Institute of Transportation Engineers (ITE) VTCSH Part 2 and a Certificate of Compliance with these standards shall be submitted by the manufacturer for each type of signal head. The certificate shall state that the lot of signal heads meets the current ITE specification. A label shall be placed on each LED signal module certifying conformance to this specification. The manufacturer's name, trademark, serial number and other necessary identification shall be permanently marked on the backside of the LED signal module. LED signal modules used on this project shall be from the same manufacturer. A label shall be provided on the LED housing and the Contractor shall mark the label with a permanent marker to note the installation date.

The manufacturer shall provide a written warranty against defects in materials and workmanship for the LED signal modules for a period of 60 months after the installation of the modules. All warranty documentation shall be given to the Engineer prior to installation.

Traffic Signal Cover
Section 9-29.16(4) is supplemented with the following:

(NWR August 10, 2009)

Covering Material
Signal head covering material shall consist of 4 mil minimum thickness black polyethylene sheeting.

Pedestrian Push Buttons

Section 9-29.19 is supplemented with the following:

(NWR November 4, 2013)
APS Pushbutton Station
Pedestrian pushbutton station equipment shall be from one of the following manufacturers:

Polara Navigator EN4 (4-wire system)
Polara Manufacturing
9153 Stellar Court
Corona, CA 92883
888-340-4872
http://www.polara.com/navigator.html
Distributed by:
Advanced Traffic Products
909 SE Everett Mall Wy
Suite B280
Everett, WA 98208
425-347-6208

Novax SoundSafe APS
Novax Industries Corporation
202-1525 Cliveden Ave
Delta, BC V3M 6L2
604-525-5644
http://www.novax.com/#!products/vstc1=soundsafe
Distributed by:
Northwest Signal Supply
12965 SW Herman Rd
Tualatin, OR 97062
503-635-4351

Campbell Company Advisor Guide APS
Campbell Company
450 W McGregor Dr
Boise, ID 83705
208-345-7459
http://www.pedsafety.com/advisor-guide-aps/

No WA distributor listed.

The pushbutton stations and adapters shall be Forest Green in color. The sign shall be 9 inch by 12 inch, option B (MUTCD R10-3b), when used in conjunction with a non-countdown type pedestrian signal display or 9 inch by 15 inch, option G (MUTCD R10-3e), when used in conjunction with a countdown type pedestrian signal display. The sign shall include a frame adapter plate.

A pole adaptor, from the pushbutton station manufacturer, shall be utilized when a pole adaptor is required.

Each pedestrian signal pushbutton station shall include one pedestrian signal head control unit, mountable in the associated pedestrian signal display enclosure.

All manufacturer recommended setup equipment, required to program, adjust and make operational the pedestrian pushbutton stations, shall be furnished with each complete pushbutton system.

All pedestrian pushbutton station equipment shall be the same make or model from one manufacturer.

Pedestrian Signals

Section 9-29.20 is supplemented with the following:

NWR January 26, 2011)
Countdown Pedestrian Signal
All pedestrian signal displays shall be the countdown type signal display as follows and from the following manufacturer:

Model: 430-6479-001X

Manufacturer: Dialight Corp.
1501 Route 34 South
Farmingdale, NJ 07727
http://www.dialight.com/

Service Cabinets

Section 9-29.24 is supplemented with the following:

(NWR February 11, 2013)
Service Cabinet Construction
Service cabinets shall be fabricated from 0.125 inch sheet aluminum (5052 alloy) with mill finish. The aluminum shall not be anodized and the exterior shall not be painted.

Cabinet doors shall be four-hinged with a two-position door stop assembly and a three point latch.

A three-position terminal block shall be installed between the main electrical service panel and the photocell assembly base.

The cabinet bonding connection shall be a welded plate with stainless steel hardware, Belleville washers, cu/al lug, and antioxidant compound. The bolt shall be torqued to fully compress the Belleville washers.

Equipment List And Drawings

Section 8-20.2(1) is supplemented with the following:

(NWR November 13, 1996)

Manufacturer's data for materials proposed for use in the contract which require approval shall be submitted in one complete package.

(NWR April 19, 1995)
Pole base to light source distances (H1) for lighting standards with pre-approved plans will be determined or verified by the Engineer at the request of the Contractor prior to fabrication.

8-20.3 Construction Requirements

General

Section 8-20.3(1) is supplemented with the following:

(NWR May 15, 2000)
Energized Equipment
Work shall be coordinated so that electrical equipment, with the exception of the service cabinet, is energized within 72 hours of installation.

(NWR January 11, 2005)
Signal Display Installation
Signal displays shall be installed no more than 30 days prior to scheduled signal turn on or changeover.

Junction Boxes, Cable Vaults, and Pull boxes

Section 8-20.3(6) is supplemented with the following:

(NWR February 11, 2013)
Unless otherwise noted in the Plans or approved by the Engineer, junction boxes, cable vaults and pull boxes shall not be placed within the traveled way or paved shoulders.

All junction boxes, cable vaults, and pull boxes placed within the traveled way or paved shoulders shall be heavy-duty.

Wiring shall not be pulled into any conduit until all associated junction boxes have been adjusted to, or installed in, their final grade and location, unless installation is necessary to maintain system operation. If wire is installed for this reason, sufficient slack shall be left to allow for future adjustment.

Prior to installing new cables or reinstalling existing cables into new or existing cable vaults, pull boxes or junction boxes, the cable vault, pull box or junction box shall be cleaned of all dirt and debris.

When junction boxes, cable vaults and pull boxes are installed or adjusted prior to construction of finished grade, pre-molded joint filler for expansion joints may be placed around the junction boxes, cable vaults and pull boxes. The joint filler shall be removed prior to adjustment to finished grade.

The six-inch gravel pad required in Standard Plan J-40.10.01 and J-40.30.00 shall be maintained. When existing junction boxes do not have this gravel pad, it shall be installed as part of the adjustment to finished grade.

Heavy-duty Type 4, 5 and 6 junction boxes, cable vaults and pull boxes shall be installed in accordance with the following:

1. Excavation for junction boxes, cable vaults and pull boxes shall be sufficient to leave one foot in the clear between their outer surface and the earth bank.

2. Junction boxes, cable vaults and pull boxes shall be installed on a level 6-inch layer of crushed surfacing top course, in accordance with 9-03.9(3), placed on a compacted or undisturbed foundation. The crushed surfacing shall be compacted in accordance with Section 2-09.3(1)E.

3. After installation, the lid/cover shall be kept bolted down during periods when work is not actively in progress at the junction box, cable vault or pull box.

4. Before closing the lid/cover, the lid/cover and the frame/ring shall be thoroughly brushed and cleaned of all debris. There shall be absolutely no visible dirt, sand or other foreign matter between the bearing surfaces.

5. When the lid/cover is closed for the final time, a liberal coating of anti-seize compound shall be applied to the bolts and nuts and the lid shall be securely tightened.

6. Hinges on the Type 4, 5 and 6 junction boxes shall be located on the side of the box, which is nearest to adjacent shoulder. Hinges shall allow the lid to open 180 degrees.

Wiring

Section 8-20.3(8) is supplemented with the following:

(NWR April 14, 2003)
Wire Labels
At each junction box, all illumination wires, power supply wires, and communication cable shall be labeled with a PVC marking sleeve. For illumination and power supply circuits the sleeve shall bear the circuit number. For communication cable the sleeve shall be marked “Comm.”.

(NWR March 13, 1995)
Wire Splices
All splices shall be made in the presence of the Engineer.

(NWR May 1, 2006)
Illumination Circuit Splices
Temporary splices shall be the heat shrink type.

(March 13, 1995)
Field Wiring Chart

501	AC+ Input	516-520 Railroad Pre-empt
502	AC- Input	5A1-5D5 Emergency Pre-empt
503-510	Control-Display	541-580 Coordination
511-515	Sign Lights	581-599 Spare

Movement Number	1	2	3	4	5	6	7	8	9
Vehicle Head									
Red	611	621	631	641	651	661	671	681	691
Yellow	612	622	632	642	652	662	672	682	692
Green	613	623	633	643	653	663	673	683	693
Spare	614	624	634	644	654	664	674	684	694
Spare	615	625	635	645	655	665	675	685	695
AC-	616	626	636	646	656	666	676	686	696
Red Auxiliary	617	627	637	647	657	667	677	687	697
Yellow Auxiliary	618	628	638	648	658	668	678	688	698
Green Auxiliary	619	629	639	649	659	669	679	689	699
Pedestrian Heads & Dets.									
Hand	711	721	731	741	751	761	771	781	791
Man	712	722	732	742	752	762	772	782	792
AC-	713	723	733	743	753	763	773	783	793
Detection	714	724	734	744	754	764	774	784	794
Common-Detection	715	725	735	745	755	765	775	785	795
Spare	716	726	736	746	756	766	776	786	796
Spare	717	727	737	747	757	767	777	787	797
Spare	718	728	738	748	758	768	778	788	798
Spare	719	729	739	749	759	769	779	789	799
Detection									
AC+	811	821	831	841	851	861	871	881	891
AC-	812	822	832	842	852	862	872	882	892
Common-Detection	813	823	833	843	853	863	873	883	893
Detection A	814	824	834	844	854	864	874	884	894
Detection B	815	825	835	845	855	865	875	885	895
Loop 1 Out	816	826	836	846	856	866	876	886	896
Loop 1 In	817	827	837	847	857	867	877	887	897
Loop 2 Out	818	828	838	848	858	868	878	888	898
Loop 2 In	819	829	839	849	859	869	879	889	899
Supplemental Detection									
Loop 3 Out	911	921	931	941	951	961	971	981	991
Loop 3 In	912	922	932	942	952	962	972	982	992
Loop 4 Out	913	923	933	943	953	963	973	983	993
Loop 4 In	914	924	934	944	954	964	974	984	994
Loop 5 Out	915	925	935	945	955	965	975	985	995
Loop 5 In	916	926	936	946	956	966	976	986	996
Loop 6 Out	917	927	937	947	957	967	977	987	997

Loop 6 In	918	928	938	948	958	968	978	988	998
Spare	919	929	939	949	959	969	979	989	999

Wiring

Section 8-20.3(8), is supplemented with the following:

All signal cable and loop detector lead-in cable terminations, in the controller cabinet, shall have no mere than four (4) inches of the insulation jacket removed.

Bonding, Grounding

Section 8-20.3(9) is supplemented with the following:

(NWR August 21, 2006)
Where shown in the Plans or where designated by the Engineer, the metal frame and lid of existing junction boxes shall be grounded to the existing equipment grounding system. The existing equipment grounding system shall be derived from the service serving the raceway system of which the existing junction box is a part.

Testing

Section 8-20.3(11) is supplemented with the following:

(NWR August 5, 1996)
Communication Cable Acceptance Testing
Communications cable acceptance testing shall be performed for each pair of conductors. Acceptance testing shall commence only after all communication cable is installed, and all splices have been completed, with the exception of the splices

connecting the new cable to existing cable. If any test fails, repairs shall be made by the Contractor and the entire test series shall be repeated.

Three tests shall be performed on each cable installation. All tests shall be conducted in the presence of the Engineer. The Contractor shall provide the necessary test equipment, perform the tests, and document the results. When the tests are completed, whether successful or not, the test result documentation shall be provided to the Engineer. All tests shall be conducted on all pairs in the communication cable to each cable drop point. Seven calendar days notice shall be given by the Contractor prior to performing any of the tests.

For each arterial all testing shall be conducted from the same cable drop point.

Continuity Test:
The continuity test shall be made on each conductor as well as the cable shield. Each conductor and/or shield shall show a resistance of not more than 20 ohms per 1,000 feet of conductor. The resistance of each conductor shall be recorded.

Insulation Test:
The insulation test shall be measured on each insulated conductor with all other conductors in the cable (including cable shield) grounded. The measurement shall be made with a DC potential of not less than 60% and not more than 90%

of the insulation rating for 1 minute. Insulation resistance shall exceed 5,000 megohm-miles. The insulation resistance of each conductor shall be recorded.

Frequency Response and Noise Test:
The frequency response and noise tests shall be performed on each pair of conductors. All tests shall be made using transmission test instruments designed especially for use on data circuits. Two such instruments are required; one for use at the designated testing location and the other for use at each cable drop location.

The test sets shall be subject to approval by the Engineer prior to the start of the tests.

The first test shall measure frequency response from the test location to each cable drop. A tone of 0 dBm shall be applied to the transmitting end and the signal level shall be measured at the receiving end. The cable pair being tested shall be isolated from ground and terminated in 600 ohms at both test locations. A 10,000 ohm resistor shall terminate the same pair at all other cable drop locations. The test shall be performed at frequencies of 300, 500, 700, 1,004, 1,500, 2,300 and 3,000 Hz. The received tone shall be:

Greater than minus 16 dBm at 1,004 Hz.

2 dB gain to 8 dB loss with respect to the level at 1,004 Hz over the frequency range of 500 to 2,500 Hz.

2 dB gain to 12 dB loss with respect to the level at 1,004 Hz over the frequency ranges of 300 to 500 Hz and 2,500 to 3,000 Hz.

The second test shall measure circuit or background noise. The cable pair being tested shall be terminated the same as in the previous test. A C-message filter in the test set shall restrict the spectrum to the range normally used for voice-grade data circuits. The noise level shall be at least 13 dB below the lowest signal level measured in the first test.

All test data shall be recorded in an approved format. Cables which fail the tests shall be repaired or replaced as directed by the Engineer.

(NWR October 16, 2010)
Traffic Signal Turn-on
Prior to a Traffic Signal Turn-on event, the contractor shall conduct a Pre Turn-on coordination meeting with the following Contracting Agency personnel included as invited attendees:

Project Engineer
Project Chief Inspector
Electrical Inspector

Signal Operations Engineer
Signal Maintenance Technician

The Contractor shall provide the Engineer a minimum of 5 days written notice of the proposed Pre Turn-on coordination meeting date and time.

Prior to the Pre Turn-on coordination meeting, the Contractor shall complete the items of work detailed in the Traffic Signal Turn-on Checklist and submit the completed checklist to the Engineer. The Traffic Signal Turn-on Checklist form will be furnished to the Contractor by the Engineer.

Prior to scheduling a turn-on date, the Contractor shall provide verification to the Engineer that tests 1, 2, and 3 as specified in this section have been completed.

Amplifier, Transformer, and Terminal Cabinets

9-29.25 is revised to read:

2. Nominal cabinet dimensions shall be:

	Depth	**Height**	**Width**
a. Terminal	8”	16”	12”
b. Terminal	8”	24”	18”
c. Transformer Up to 3.0 KVA	12”	18”	18”
Transformer 5.0 to 12.5 KVA	20”	40”	24”
Transformer 12.6 to 35 KVA	30”	60”	32”

Signal Systems

Section 8-20.3(14) is supplemented with the following:

Equipment Requirements

Equipment requirements shall include the following:

Materials Contacts

1. Cabinet – Western Systems
   1122 Industry Street, Bldg. B
   Everett, WA 98023
   (425) 438-1133
   Sales Rep Contact - Zach Holting
   (503) 349-5970

2. Controller – McCain Traffic
   Sales Rep Contact - Jim Fauconnier
   (425) 766-4124

3. Peek Traffic Supplies
   Northwest Signal Supply Inc.
   Sales Rep Contact – Toby Newhouse
   (206) 940-7977

4. Advanced Traffic Products (GTT Rep)
   1122 Industry Street, Bldg. A

Everett, WA 98023
(425) 347-6208

Traffic Signal Controller
Section 9-29.13(3) is supplemented with the following:

Contractor shall install the following equipment:
1. Traffic Controller – ATC eX TS 2 Type 1 NEMA Traffic Controller or approved equal;
2. Conflict monitor – Peek Double Diamond NEMA MMU and Conflict Monitor or approved equal;

Signal Heads
In Section 8-20.3(14)B the first paragraph is revised to read as follows:

(NWR February 11, 2013)
Signal Heads Installation with Back Plates
Signal heads shall be installed with back plates.

Where the yellow reflective tape is applied, the application surface of the back plate shall be cleaned, degreased with isopropyl alcohol and dried prior to application of the sheeting.

8-20.5 Payment
Section 8-20.5 is supplemented with the following:

(NWR August 10, 2009)
All costs for installing conduit and junction boxes containing both signal wiring and signal interconnect shall be included in the lump sum contract prices for the associated traffic signal system bid item.

(NWR August 10, 2009)
All costs for adjustment of new junction boxes, both to the final grade and any grade adjustments required for the various construction stages proposed in the Contract, or for alternative stages proposed by the Contractor, shall be included in the lump sum contract price for the associated electrical system.

The construction signs used during signal turn-on will be paid as part of "Temporary Project Traffic Control".

8-21 PERMANENT SIGNING

8-21.2 Materials
Section 8-21.2 is SUPPLEMENTED with the following:

All signage shall conform to current MUTCD Guidelines.

8-22 PAVEMENT MARKINGS

8-22.2 Materials

Section 8-22.2 is supplemented with:

Plastic pavement marking material shall conform to the following:

Long Line Markings: Type D-Liquid Cold Applied Methyl Methacrylate (spray or extruded)

Transverse and Symbol Markings: Type D-Liquid Cold Applied Methyl Methacrylate (spray or extruded)

8-22.3 Construction Requirements

Section 8-22.3 is supplemented with:

Contractor shall be responsible for establishing the necessary control points to enable spotting of the new pavement markings prior to installation.

Prior to installing pavement markings, the Contractor shall pre-mark the layout of all channelization and receive approval from the Engineer. Pre-marks shall consist of painted spot markings. The Contractor shall notify the Engineer and request approval of the pre-mark channelization at least 48 hours prior to placement of the pavement markings.

8-23 TEMPORARY PAVEMENT MARKINGS

8-23.1 Description

Section 8-23.1 is supplemented with the following:

Temporary broken centerline striping shall be provided this contract at either the current roadway centerline or the construction centerline. The Contractor's Traffic Control Manager or Traffic Control Supervisor shall be responsible for scheduling when to place, renew, and remove temporary pavement markings.

8-23.5 Payment

Section 8-23.5 is replaced with the following:

All temporary pavement markings shall be included in the bid item "Temporary Project Traffic Control".

END OF DIVISION 8

DIVISION 9
MATERIALS

(April 4, 2016)
Standard Plans

The State of Washington Standard Plans for Road, Bridge and Municipal Construction M21-01 transmitted under Publications Transmittal No. PT 15-048, effective August 3, 2015 is made a part of this contract.

The Standard Plans are revised as follows:

A-30.15
DELETED

A-50.10
Sheet 2 of 2, Plan, with Single Slope Barrier, reference C-14a is revised to C-70.10

A-50.20
Sheet 2 of 2, Plan, with Anchored Barrier, reference C-14a is revised to C-70.10

A-50.30
Sheet 2 of 2, Plan (top), reference C-14a is revised to C-70.10

A-60.30
Note 4, was – "If the ACP and membrane is to be removed from the bridge deck, see GSP 023106 for deck preparation before placing new membrane." Is revised to read; "If the ACP and membrane is to be removed from the bridge deck, see GSP 6-02.3(10)D.OPT6.GB6 for deck preparation before placing new membrane."

B-10.20 and B-10.40
Substitute "step" in lieu of "handhold" on plan

B-15.60
Table, Maximum Knockout Size column, 120" Diam., 42" is revised to read; 96"

B-25.20
Add Note 7. See Standard Specification Section 8-04 for Curb and Gutter requirements

B-40.40
Note 2, was – "When bolt-down grates are specified in the Contract, provide two slots in the grate that are centered with the holes in the frame. Location of bolt-down slots varies among different manufacturers." Is revised to read; "Bolt-down capability is required on all frames, grates, and covers, unless specified otherwise in the Contract. Provide 2 holes in the frame that are vertically aligned with the grate or cover slots. The frame shall accept the 5/8" (in) – 11 NC x 2" (in) Allen head cap screw by being tapped, or other approved mechanism. Location of bolt-down holes varies by manufacturers."

B-55.20
Metal Pipe elevation, title is revised to read; “Metal Pipe and Steel Rib Reinforced Polyethylene Pipe”

B-90.40
Offset & Bend details, add the subtitle, “Plan View” above titles

C-8b
Section A, callout, was – “Grout” is revised to read; “Grout ~ 2” (IN) MAX., callout, was – “Anchor Bolt (TYP.) ~ See Detail” is revised to read; “Anchor Bolt or Rod (TYP.) ~ See Detail”, Sheet 2, Detail “A”, callout, was – “Anchor Bolt (TYP.) ~ See Detail”, is revised to read; “Anchor Bolt or Rod (TYP) ~ See Detail”. Anchor Bolt Detail, DELETED – Headed Bolt DETAIL portion of the ANCHOR BOLT DETAIL. Dimension, “5 1/2" MIN. Threads” is deleted. Add dimension, “1” MAX.” from top of barrier to bottom of the nut, Callout, was – “1” Diam. Threaded Rod ~ ASTM A 419” is revised to read; “1” (IN) Diam. Threaded Full Length Rod or Bolt ~ ASTM F 1554, Grade 105”. Note (Below Title), was – “Galvanize Exposed Anchor Rod End 1’ – 9” Min.” is revised to read; “Galvanized Anchor Bolt Full Length according to ASTM F 2329”. Subtitle – was “Threaded Rod” is revised to read; “Threaded Rod or Bolt”, Sheet 2, Anchor Plate detail, callout, was – 1” DIAM. HOLE (TYP.)” IS REVISED TO READ; “1 1/8” (IN) DIAM. HOLE (TYP.)” , callout, was – “/2” Plate” is revised to read;”1/2” (IN) Plate ~ ASTM A36

C-1
Assembly Detail, Steel Post, (post) callout – was - ”W6 x 9 or W6 x 15” is revised to read; “W6 x 8.5 or W6 x 9 or W6 x 15”

C-10
General Note 1, first sentence, was – “Length of W8 x 35 and W6 x 9 shall be determined by measurement from top of ground to top of grout pad.” Is revised to read; “Length of W8 x 35 and W6 x 8.5 or W6 x 9 shall be determined by measurement from top of ground to top of grout pad.”
Sheet 1, Post Base Plate Detail, callout, was – “W6 x 9” is revised to read; “W6 x 8.5 or W6 x 9”
Sheet 1, Box Culvert Guardrail Steel Post Type 2 detail, callout, was – “W6 x 9 Steel Post” is revised to read;” “W6 x 8.5 or W6 x 9 Steel Post”
Sheet 1, Post Anchor Attachment Detail, callout, was – “W6 x 9 ~ See Note 1” is revised to read; “W6 x 8.5 or W6 x 9 ~ See Note 1”
Sheet 1, Detail A, callout, was – “W6 x 9 Steel Post ~ See Note 1” is revised to read; “W6 x 8.5 or W6 x 9 Steel Post ~ See Note 1”
Sheet 2, Box Culvert Guardrail Steel Post Type 1, callout, was – “W6 x 9 x 27.5” Steel Post” is revised to read; “W6 x 8.5 x 27.5” (IN) or W6 x 9 x 27.5” (IN) Steel Post”
Sheet 2, Detail B, callout, was – “W6 x 9 x 27.5” Steel Post” is revised to read; “W6 x 8.5 x 27.5” (IN) or W6 x 9 x 27.5” (IN) Steel Post”

C-16a
Note 1, reference C-28.40 is revised to C-20.10

C-16b
Note 3, reference C-28.40 is revised to C-20.10

C-22.14
Plan, callout, was – "Location of Post (Without Block) ~ W6 x 9 Steel Post Only" is revised to read; "Location of Post (Without Block) ~ W6 x 8.5 or W6 x 9 Steel Post Only"
Elevation, callout, was – "Location of Post (Without Block) ~ W6 x 9 Steel Post Only" is revised to read; "Location of Post (Without Block) ~ W6 x 8.5 or W6 x 9 Steel Post Only"

C-22.45
Note 1, was – "This Terminal is FHWA accepted at Test Level Two (TL-2) and may be used in applications with speeds of 40 MPH or less." Is revised to read: "This Terminal is FHWA accepted at Test Level Two (TL-2) and may be used in applications with speeds of 45 MPH or less." Plan Title, was – "Beam Guardrail Type 31 Non – Flared Terminal Steel Posts (Posted Speed ~ 40 MPH and Below)" is revised to read: "Beam Guardrail Type 31 Non – Flared Terminal Steel Posts (Posted Speed ~ 45 MPH and Below

D-10.10
Wall Type 1 may be used if no traffic barrier is attached on top of the wall. Walls with traffic barriers attached on top of the wall are considered non-standard and shall be designed in accordance with the current WSDOT Bridge Design Manual (BDM) and the revisions stated in the 11/3/15 Bridge Design memorandum.

D-10.15
Wall Type 2 may be used if no traffic barrier is attached on top of the wall. Walls with traffic barriers attached on top of the wall are considered non-standard and shall be designed in accordance with the current WSDOT BDM and the revisions stated in the 11/3/15 Bridge Design memorandum.

D-10.20
Wall Type 3 may be used in all cases. The last sentence of Note 6 on Wall Type 3 shall be revised to read: The seismic design of these walls has been completed using a site adjusted (effective) peak ground acceleration of 0.32g.

D-10.25
Wall Type 4 may be used in all cases. The last sentence of Note 6 on Wall Type 4 shall be revised to read: The seismic design of these walls has been completed using a site adjusted (effective) peak ground acceleration of 0.32g.

D-10.30
Wall Type 5 may be used in all cases.

D-10.35
Wall Type 6 may be used in all cases.

D-10.40
Wall Type 7 may be used if no traffic barrier is attached on top of the wall. Walls with traffic barriers attached on top of the wall are considered non-standard and shall be designed in accordance with the current WSDOT BDM and the revisions stated in the 11/3/15 Bridge Design memorandum.

D-10.45
Wall Type 8 may be used if no traffic barrier is attached on top of the wall. Walls with traffic barriers attached on top of the wall are considered non-standard and shall be designed in accordance with the current WSDOT BDM and the revisions stated in the revisions stated in the 11/3/15 Bridge Design memorandum.

D-15.10
STD Plans D-15 series "Traffic Barrier Details for Reinforced Concrete Retaining Walls" are withdrawn. Special designs in accordance with the current WSDOT BDM are required in place of these STD Plans.

D-15.20
STD Plans D-15 series "Traffic Barrier Details for Reinforced Concrete Retaining Walls" are withdrawn. Special designs in accordance with the current WSDOT BDM are required in place of these STD Plans.

D-15.30
STD Plans D-15 series "Traffic Barrier Details for Reinforced Concrete Retaining Walls" are withdrawn. Special designs in accordance with the current WSDOT BDM are required in place of these STD Plans.

F-10.12
Section Title, was – "Depressed Curb Section" is revised to read: "Depressed Curb and Gutter Section"

F-10.40
"EXTRUDED CURB AT CUT SLOPE", Section detail - Deleted

F-10.42
DELETE – "Extruded Curb at Cut Slope" View

G-24.40
Sheet 1, Elevation (upper left corner), callout, was – "Sign Brace~ 36" (IN) or larger in width required (See Standard Plan G-50.10)" is revised to read; "Sign Brace (See Standard Plan G-50.10)" Sheet 3, Elevation (upper left corner), callout, was – "Sign Brace~ 36" (IN) or larger in width required (See Standard Plan G-50.10)" is revised to read; "Sign Brace (See Standard Plan G-50.10)"

H-70.20
Sheet 2, Spacing Detail, Mailbox Support Type 1, reference to Standard Plan I-70.10 is revised to H-70.10

I-80.10
Stabilized Construction Entrance, Isometric View, add Note to read; "Note: At the discretion of the contractor, smaller rock may be used to fill in voids between the quarry spalls to create a walking pathway for crossing the construction entrance."

J-3
DELETED

J-3b
DELETED

J-3C
DELETED

J-10.21
Note 18, was – "When service cabinet is installed within right of way fence, see Standard Plan J-10.22 for details." Is revised to read; "When service cabinet is installed within right of way fence, or the meter base is mounted on the exterior of the cabinet, see Standard Plan J-10.22 for details."

J-10.22
Key Note 1, was – "Meter base per serving utility requirements~ as a minimum, the meter base shall be safety socket box with factory-installed test bypass facility that meets the requirements of EUSERC drawing 305." Is revised to read; "Meter base per serving utility requirements~ as a minimum, the meter base shall be safety socket box with factory-installed test bypass facility that meets the requirements of EUSERC drawing 305. When the utility requires meter base to be mounted on the side or back of the service cabinet, the meter base enclosure shall be fabricated from type 304 stainless steel."
Key Note 4, "Test with (SPDT Snap Action, Positive close 15 Amp – 120/277 volt "T" rated). Is revised to read: "Test Switch (SPDT snap action, positive close 15 amp – 120/277 volt "T" rated)."
Key Note 14, was – "Hinged dead front with ¼ turn fasteners or slide latch." Is revised to read; "Hinged dead front with ¼ turn fasteners or slide latch. ~ Dead front panel bolts shall not extend into the vertical limits of the breaker array(s)."
Key Note 15, was – "Cabinet Main Bonding Jumper. Buss shall be 4 lug tinned copper. See Cabinet Main bonding Jumper detail, Standard Plan J-3b." is revised to read; "Cabinet Main Bonding Jumper Assembly ~ Buss shall be 4 lug tinned copper ~ See Standard Plan J-10.20 for Cabinet Main Bonding Jumper Assembly details."

J-20.10
Add Note 5, "5. One accessible pedestrian signal assembly per pedestrian pushbutton post."

J-20.11
Sheet 2, Foundation Detail, Elevation, callout – "Type 1 Signal Pole" is revised to read: "Type PS or Type 1 Signal Pole"
Sheet 2, Foundation Detail, Elevation, add note below Title, "(Type 1 Signal Pole Shown)"
Add Note 6, "6. One accessible pedestrian signal assembly per pedestrian pushbutton post."

J-20.26
Add Note 1, "1. One accessible pedestrian pushbutton station per pedestrian pushbutton post."

J-20.16
View A, callout, was – LOCK NIPPLE, is revised to read; CHASE NIPPLE

J-21.10
Sheet 1 of 2, Elevation view (Round), add dimension depicting the distance from the top of the foundation to find 2 #4 reinforcing bar shown, to read; 3" CLR.. Delete "(TYP.)" from the 2 ½" CLR. dimension, depicting the distance from the bottom of the foundation to find 2 # 4 reinf. Bar.
Sheet 1 of 2, Elevation view (Square), add dimension depicting the distance from the top of the foundation to find 1 #4 reinforcing bar shown, to read; 3" CLR. Delete "(TYP.)" from the 2 ½" CLR. dimension, depicting the distance from the bottom of the foundation to find 1 # 4 reinf. Bar.
Sheet 2 of 2, Elevation view (Round), add dimension depicting the distance from the top of the foundation to find 2 #4 reinforcing bar shown, to read; 3" CLR. Delete "(TYP.)" from the 2 ½" CLR. dimension, depicting the distance from the bottom of the foundation to find 2 # 4 reinf. Bar.
Sheet 2 of 2, Elevation view (Square), add dimension depicting the distance from the top of the foundation to find 1 #4 reinforcing bar shown, to read; 3" CLR. Delete "(TYP.)" from the 2 ½" CLR. dimension, depicting the distance from the bottom of the foundation to find 1 # 4 reinf. Bar.

J-21.15
Partial View, callout, was – LOCK NIPPLE ~ 1 ½" DIAM., is revised to read; CHASE NIPPLE ~ 1 ½" (IN) DIAM.

J-21.16
Detail A, callout, was – LOCKNIPPLE, is revised to read; CHASE NIPPLE

J-22.15
Ramp Meter Signal Standard, elevation, dimension 4' - 6" is revised to read; 6'-0"
(2x) Detail A, callout, was – LOCK NIPPLE ~ 1 ½" DIAM. is revised to read; CHASE NIPPLE ~ 1 ½" (IN) DIAM.

J-28.45
Steel Light Standard Elbow Detail, dimension, was – "1-1/2" MAX." is revised to read; 2" MAX.. callout, was – "1.00 – 8 UNC x 8" (IN) long bolt threaded full length (ASTM A325 or F1554 GR. 105) with two heavy hex nuts, two plate washers, and a round washer (Typ.) (Galvanized AASHTO M232)"is revised to read; "1.00 – 8 UNC x 8 1/2" (IN) long bolt threaded full length (ASTM A325 or F1554 GR. 105) with two heavy hex nuts, two plate washers, and a round washer (Typ.) (Galvanized per AASHTO F2329)". callout, was – "3/16" (IN) thick preformed "Fabreeka" fabric pad with 5" (IN) diam. hole ~ cement to flange plate and trim outside edge flush" is revised to read; "3/16" (IN) or 1/4" (IN) thick preformed "Fabreeka" fabric pad with 5" (IN) diam. hole ~ cement to flange plate and trim outside edge flush". Exploded Isometric View, callout, was – "1" (IN) Diam. Heavy Hex Bolt (Typ.)" is revised to read;1" Diam. Bolt (Typ.). Section B, callout, was – "3 1/2" (IN) x 3/16" (IN)(17" (IN)…" is revised to read; "4" (IN) x 3/16" (IN)(17" (IN)…". Typical Sections, two traffic barrier views, add dimension [from the top of the pole base plate to the bottom of the Hand Hole]"6" MIN.". all three views, callout, was – "1" (IN) Diam. H. S. bolt w/ hardened lock washer and nut (Typ.) (ASTM A325 or F1554 GR. 105)" is revised to read; "1" (IN) Diam. H. S. bolt w/ hardened lock washer and nut (Typ.) (ASTM A449 or F1554 GR. 105)".

J-28.50
Section D, callout, was – Backup Strip (ref. to key note 3) is revised to read; "Continuous Backup Strip (ref. to key note 3)"
Key Note 3, was – ¼" Thick, or No thinner than pole wall thickness. Tack weld or seal weld to Base plate. Is revised to read; "1/4" Thick, or No thinner than Pole wall thickness. Tack weld in root or continuous seal weld to Base plate or Pole wall."

J-28.60
Section B, callout, was – "Continuous Back-up ring – 1/4" or no thinner than pole wall thickness ~ tack weld to plate" is revised to read; "Continuous Back-up ring ~ 1/4" or no thinner than pole wall thickness ~ tack weld in root or continuous seal weld to base plate or pole wall"

J-28.70
Detail C, dimension, 2" MAX. is revised to read: 1" MAX.
Detail D, dimension, 2" MAX. is revised to read: 1" MAX.

J-29.10
Galvanized Welded Wire Mesh detail, callout – "Drill and Tap for ¼" Diam. Cap Screw, 3 Places, @ 9" center, all 4 edges S.S. Screw, ASTM F593 and washer"
Is revised to read;
"*Drill and Tap ¼" (IN) Diam. x 1" (IN) Cap Screw with washer ~ space approx.. 9" o.c. ~ Liberally coat threads with Anti-seize compound (TYP.)"

Add Boxed note: * Bolts, Nuts, and washers ~ ASTM F593 or A193 Type 304 or Type 316 Stainless Steel (S.S.)

J-29.15
Title, "Camera Pole Standard" is revised to read; "Camera Pole Standard Details"

J-29-16
Title, "Camera Pole Standard Details" is revised to read; "Camera Pole Details"

J-40.10
Sheet 2 of 2, Detail F, callout, "12 – 13 x 1 ½" S.S. PENTA HEAD BOLT AND 12" S. S. FLAT WASHER" is revised to read; "12 – 13 x 1 ½" S.S. PENTA HEAD BOLT AND 1/2" (IN) S. S. FLAT WASHER"

J-60.14
All references to J-16b (6x) are revised to read; J-60.11

J-90.10
Section B, callout, "Hardware Mounting Rack ~ S. S. 1-5/8" Slotted Channel" is revised to read: "Hardware Mounting Rack (Typ.) ~ Type 304 S. S. 1-5/8" Slotted Channel"

J-90.20

Section B, callout, "Hardware Mounting Rack (Typ.) ~ S. S. 1-5/8" Slotted Channel" is revised to read: "Hardware Mounting Rack (Typ.) ~ Type 304 S. S. 1-5/8" Slotted Channel"

K-80.10
Sign Installation (Fill Section), dimension, 6' TO 12' MIN. is revised to read: 12' MIN.
Sign Installation (Sidewalk and Curb Section), dimension, 6' TO 12' MIN. is revised to read: 12' MIN.
Sign Installation (Behind Traffic Barrier Section), Delete dimensions - 6' TO 12' MIN. and 6' MIN.
Sign with Supplemental Plaque Installation (Fill Section), dimension, 6' TO 12' MIN. is revised to read: 12' MIN.
Sign Installation (Ditch Section), dimension, 6' TO 12' MIN. is revised to read: 12' MIN. Delete dimension – 6' MIN.

K-80.30
In the NARROW BASE, END view, the reference to Std. Plan C-8e is revised to Std. Plan K-80.35

M-11.10
Layout, dimension (from stop bar to "X"), was – 23' is revised to read; 24'

M-20.30
Sheet 2, Plan View, One-Way Roadway Recessed Pavement Marker Details, ONE-WAY TRAFFIC arrow symbol, is revised to point in the opposite direction (towards the rpm)

The following are the Standard Plan numbers applicable at the time this project was advertised. The date shown with each plan number is the publication approval date shown in the lower right-hand corner of that plan. Standard Plans showing different dates shall not be used in this contract.

A-10.10-00.....8/7/07
A-10.20-00.....10/5/07
A-10.30-00.....10/5/07
A-20.10-00.....8/31/07
A-30.10-00.....11/8/07
A-30.30-01.....6/16/11
A-30.35-00.....10/12/07
A-40.00-00.....8/11/09
A-40.10-03.....12/23/14
A-40.15-00.....8/11/09
A-40.20-03.....12/23/14
A-40.50-02.....12/23/14
A-50.10-00…....11/17/08
A-50.20-01….....9/22/09
A-50.30-00….....11/17/08
A-50.40-00….....11/17/08
A-60.10-03.....12/23/14
A-60.20-03.....12/23/14
A-60.30-00.....11/8/07
A-60.40-00.....8/31/07

B-5.20-01.....6/16/11
B-5.40-01.....6/16/11
B-5.60-01.....6/16/11
B-10.20-01.....2/7/12
B-10.40-00.....6/1/06
B-10.60-00.....6/8/06
B-15.20-01.....2/7/12
B-15.40-01.....2/7/12
B-15.60-01.....2/7/12
B-30.50-01.....4/26/12
B-30.70-03.....4/26/12
B-30.80-00.....6/8/06
B-30.90-01.....9/20/07
B-35.20-00.....6/8/06
B-35.40-00.....6/8/06
B-40.20-00.....6/1/06
B-40.40-01.....6/16/10
B-45.20-00.....6/1/06
B-75.20-01.....6/10/08
B-75.50-01.....6/10/08
B-75.60-00.....6/8/06
B-80.20-00.....6/8/06
B-80.40-00.....6/1/06
B-82.20-00.....6/1/06
B-85.10-01.....6/10/08
B-85.20-00.....6/1/06
B-85.30-00.....6/1/06

B-20.20-02.....3/16/12
B-20.40-03.....3/16/12
B-20.60-03.....3/15/12
B-25.20-01.....3/15/12
B-25.60-00.....6/1/06
B-30.10-01.....4/26/12
B-30.20-02.....4/26/12
B-30.30-01.....4/26/12
B-30.40-01.....4/26/12
B-45.40-00.....6/1/06
B-50.20-00.....6/1/06
B-55.20-00.....6/1/06
B-60.20-00.....6/8/06
B-60.40-00.....6/1/06
B-65.20-01.....4/26/12
B-65.40-00.....6/1/06
B-70.20-00.....6/1/06
B-70.60-00.....6/1/06
B-85.40-00.....6/8/06
B-85.50-01.....6/10/08
B-90.10-00.....6/8/06
B-90.20-00.....6/8/06
B-90.30-00.....6/8/06
B-90.40-00.....6/8/06
B-90.50-00.....6/8/06
B-95.20-01.....2/3/09
B-95.40-00.....6/8/06

C-1.....6/16/11
C-1a.....7/14/15
C-1b.....7/14/15
C-1c.....5/30/97
C-1d.....10/31/03
C-2.....1/6/00
C-2a.....6/21/06
C-2b.....6/21/06
C-2c.....6/21/06
C-2d.....6/21/06
C-2e.....6/21/06
C-2f.....3/14/97
C-2g.....7/27/01
C-2h.....3/28/97
C-2i.....3/28/97
C-2j.....6/12/98
C-2k.....7/27/01
C-2n.....7/27/01
C-2o.....7/13/01
C-2p.....10/31/03
C-3.....7/2/12
C-3a.....10/4/05
C-3b.....6/27/11
C-3c.....6/27/11
C-4b.....6/8/06
C-4e.....10/23/14
C-4f.....7/2/12
C-16b.....6/3/10
C-6.....5/30/97
C-6a.....10/14/09
C-6c.....1/6/00
C-6d.....5/30/97
C-6f.....7/25/97
C-7.....6/16/11
C-7a.....6/16/11
C-8.....2/10/09
C-8a.....7/25/97
C-8b.....6/27/11
C-8e.....2/21/07
C-8f.....6/30/04
C-10.....6/3/10
C-16a.....6/3/10
C-20.10-03.....7/14/15
C-20.14-03.....6/11/14
C-20.15-02.....6/11/14
C-20.18-02.....6/11/14
C-20.19-02.....6/11/14
C-20.40-05.....7/14/15
C-20.41-01.....7/14/15
C-20.42-05.....7/14/15
C-20.45.01.....7/2/12
C-22.14-03.....6/11/14
C-22.16-05.....7/14/15
C-22.40-04.....10/23/14
C-22.41-01.....10/23/14
C-22.45-01.....10/23/14
C-23.60-03.....6/11/14
C.24.10-01.....6/11/14
C-25.18-05.....7/14/15
C-25.20-06.....7/14/15
C-25.22-05.....7/14/15
C-25.26-03.....7/14/15
C-25.80-03.....6/11/14
C-40.14-02.....7/2/12
C-40.16-02.....7/2/12
C-40.18-02.....7/2/12
C-70.10-01.....6/17/14
C-75.10-01.....6/11/14
C-75.20-01.....6/11/14
C-75.30-01.....6/11/14
C-80.10-01.....6/11/14
C-80.20-01.....6/11/14
C-80.30-01.....6/11/14
C-80.40-01.....6/11/14
C-80.50-00.....4/8/12
C-85.10-00.....4/8/12
C-85.11-00.....4/8/12
C-85.14-01.....6/11/14
C-85.15-01.....6/30/14
C-85.16-01.....6/17/14
C-85-18-01.....6/11/14
C-85.20-01.....6/11/14
C-90.10-00.....7/3/08

D-2.04-00.....11/10/05
D-2.06-01.....1/6/09
D-2.08-00.....11/10/05
D-2.14-00.....11/10/05
D-2.16-00.....11/10/05
D-2.18-00.....11/10/05
D-2.20-00.....11/10/05
D-2.32-00.....11/10/05
D-2.34-01.....1/6/09
D-2.36-03.....6/11/14
D-2.48-00.....11/10/05
D-2.64-01.....1/6/09
D-2.66-00.....11/10/05
D-2.68-00.....11/10/05
D-2.80-00.....11/10/05
D-2.82-00.....11/10/05
D-2.84-00.....11/10/05
D-2.86-00.....11/10/05
D-2.88-00.....11/10/05
D-2.92-00.....11/10/05
D-3.17-01……5/17/12
D-4.....12/11/98
D-6.....6/19/98
D-10.10-01.....12/2/08
D-10.15-01.....12/2/08
D-10.20-00.....7/8/08
D-10.25-00.....7/8/08
D-10.30-00.....7/8/08
D-10.35-00.....7/8/08
D-10.40-01.....12/2/08

D-2.42-00.....11/10/05
D-2.44-00.....11/10/05
D-2.60-00.....11/10/05
D-2.62-00.....11/10/05
D-2.46-01.....6/11/14
D-3.09-00.....5/17/12
D-3.10-01……5/29/13
D-3.11-03……6/11/14
D-3.15-02……6/10/13
D-3.16-02……5/29/13
D-10.45-01.....12/2/08
D-15.10-01.....12/2/08
D-15.20-02.....6/2/11
D-15.30-01.....12/02/08

E-1.....2/21/07
E-2.....5/29/98
E-4.....8/27/03
E-4a.....8/27/03

F-10.12-03.....6/11/14
F-10.16-00.....12/20/06
F-10.18-00.....6/27/11
F-10.40-02.....6/21/12
F-10.42-00.....1/23/07
F-10.62-02.....4/22/14
F-10.64-03.....4/22/14
F-30.10-03.....6/11/14
F-40.12-02.....6/20/13
F-40.14-02.....6/20/13
F-40.15-02.....6/20/13
F-40.16-02.....6/20/13
F-45.10-01.....6/21/12
F-80.10-03.....6/11/14

G-10.10-00.....9/20/07
G-20.10-02.....6/23/15
G-22.10-03.....7/10/15
G-24.10-00.....11/8/07
G-24.20-01.....2/7/12
G-24.30-01.....2/7/12
G-24.40-05.....6/23/15
G-24.50-03.....6/17/14
G-24.60-04.....6/23/15
G-25.10-04.....6/10/13
G-30.10-04.....6/23/15
G-50.10-02.....6/23/15
G-60.10-03.....6/18/15
G-60.20-02.....6/18/15
G-60.30-02.....6/18/15
G-70.10-03.....6/18/15
G-70.20-02....6/10/13
G-70.30-02.....6/10/13
G-90.10-01…..5/11/11
G-90.20-03…..7/10/15
G-90.30-02…..3/22/13
G-90.40-01…..10/14/09
G-95.10-01.....6/2/11
G-95.20-02.....6/2/11
G-95.30-02.....6/2/11

H-10.10-00.....7/3/08
H-10.15-00.....7/3/08
H-30.10-00.....10/12/07
H-32.10-00.....9/20/07
H-60.10-01.....7/3/08
H-60.20-01.....7/3/08
H-70.10-01.....2/7/12
H-70.20-01.....2/16/12
H-70.30-02.....2/7/12

I-10.10-01.....8/11/09
I-30.10-02.....3/22/13
I-30.15-02.....3/22/13
I-30.16-00.....3/22/13
I-30.17-00.....3/22/13
I-30.20-00.....9/20/07
I-30.30-01.....6/10/13
I-30.40-01.....6/10/13
I-30.60-00.....5/29/13
I-40.10-00.....9/20/07
I-40.20-00.....9/20/07
I-50.20-01.....6/10/13
I-60.10-01.....6/10/13
I-60.20-01.....6/10/13
I-80.10-01.....8/11/09

J-10.....7/18/97
J-10.10-03……6/3/15
J-10.15-01.....6/11/14
J-10.16-00…….6/3/15
J-10.17-00…….6/3/15
J-10.18-00…….6/3/15
J-10.20-00……..6/3/15
J-10.21-00……..6/3/15
J-10.22-00.....5/29/13
J-15.10-01.....6/11/14
J-15.15-02……7/10/15
J-20.10-03.....6/30/14
J-20.11-02.....6/30/14
J-20.15-03.....6/30/14
J-26.20-00…..6/11/14
J-27.10-00…..3/15/12
J-27.15-00…..3/15/12
J-28.10-01.....5/11/11
J-28.22-00.....8/07/07
J-28.24-01.....6/3/15
J-28.26-01.....12/02/08
J-28.30-03.....6/11/14
J-28.40-02.....6/11/14
J-28.42-01.....6/11/14
J-28.43-00.....6/11/14
J-28.45-02.....6/11/14
J-28.50-02.....6/2/11
J-28.60-01.....6/2/11
J-40.39-00……5/20/13
J-40.40-00……5/20/13
J-50.10-00…….6/3/11
J-50.11-00…….6/3/11
J-50.12-00…….6/3/11
J-50.15-00…….6/3/11
J-50.16-01…….3/22/13
J-50.20-00…….6/3/11
J-50.25-00…….6/3/11
J-50.30-00…….6/3/11
J-60.05-00…….6/16/11
J-60.11-00…....5/20/13
J-60.12-00…....5/20/13
J-60.13-00…....6/16/10

J-20.16-02.....6/30/14
J-20.20-02.....5/20/13
J-20.26-01.....7/12/12
J-21.10-04.....6/30/14
J-21.15-01.....6/10/13
J-21.16-01.....6/10/13
J-21.17-01.....6/10/13
J-21.20-01.....6/10/13
J-22.15-02.....7/10/15
J-22.16-03.....7/10/15
J-26.10-02…..3/15/12
J-26.15-01…..5/17/12
J-28.70-01.....5/11/11
J-29.10-00.....6/27/11
J-29.15-00.....6/27/11
J-29.16-01.....6/20/13
J-30.10-00…...6/18/15
J-40.10-03…...5/20/13
J-40.20-02…...6/11/14
J-40.30-03……5/20/13
J-40.35-01……5/29/13
J-40.36-01……5/20/13
J-40.37-01……5/20/13
J-40.38-01.....5/20/13
J-60.14-00……6/16/10
J-75.10-02……7/10/15
J-75.20-01……7/10/15
J-75.30-02…….7/10/15
J-75.40-01……6/11/14
J-75.41-00……6/11/14
J-75.45-01……6/11/14
J-90.10-01…….6/27/11
J-90.20-01…….6/27/11
J-90.21-00……6/30/14

K-70.20-00.....2/15/07
K-80.10-00.....2/21/07
K-80.20-00.....12/20/06
K-80.30-00.....2/21/07
K-80.35-00.....2/21/07
K-80.37-00.....2/21/07

L-10.10-02.....6/21/12
L-20.10-03.....7/14/15
L-30.10-02.....6/11/14
L-40.10-02.....6/21/12
L-40.15-01.....6/16/11
L-40.20-02.....6/21/12
L-70.10-01.....5/21/08
L-70.20-01.....5/21/08

M-1.20-03.....6/24/14
M-1.40-02.....6/3/11
M-1.60-02.....6/3/11
M-1.80-03.....6/3/11
M-2.20-03.....7/10/15
M-2.21-00……7/10/15
M-3.10-03.....6/3/11
M-3.20-02.....6/3/11
M-3.30-03.....6/3/11
M-3.40-03.....6/3/11
M-3.50-02.....6/3/11
M-5.10-02.....6/3/11
M-7.50-01.....1/30/07
M-9.50-02.....6/24/14
M-9.60-00…….2/10/09
M-11.10-01.....1/30/07
M-15.10-01.....2/6/07
M-17.10-02.....7/3/08
M-20.10-02.....6/3/11
M-20.20-02.....4/20/15
M-20.30-03.....4/20/15
M-20.40-03.....6/24/14
M-20.50-02.....6/3/11
M-24.20-02.....4/20/15
M-24.40-02.....4/20/15
M-24.50-00.....6/16/11
M-24.60-04.....6/24/14
M-40.10-03.....6/24/14
M-40.20-00...10/12/07
M-40.30-00.....9/20/07
M-40.40-00.....9/20/07
M-40.50-00.....9/20/07
M-40.60-00.....9/20/07
M-60.10-01.....6/3/11
M-60.20-02.....6/27/11
M-65.10-02.....5/11/11
M-80.10-01.....6/3/11
M-80.20-00.....6/10/08
M-80.30-00.....6/10/08

END DIVISION 9

STATE
PREVAILING WAGES
STATEMENT OF INTENT TO PAY PREVAILING WAGES
AFFIDAVIT OF WAGES PAID

State of Washington
Department of Labor & Industries

Prevailing Wage Section - Telephone 360-902-5335
PO Box 44540, Olympia, WA 98504-4540

Washington State Prevailing Wage

The PREVAILING WAGES listed here include both the hourly wage rate and the hourly rate of fringe benefits. On public works projects, worker's wage and benefit rates must add to not less than this total. A brief description of overtime calculation requirements are provided on the Benefit Code Key.

Journey Level Prevailing Wage Rates for the Effective Date: 10/07/2016

County	Trade	Job Classification	Wage	Holiday	Overtime	Note
Pierce	Asbestos Abatement Workers	Journey Level	$45.25	5D	1H	
Pierce	Boilermakers	Journey Level	$64.29	5N	1C	
Pierce	Brick Mason	Journey Level	$54.32	5A	1M	
Pierce	Brick Mason	Pointer-Caulker-Cleaner	$54.32	5A	1M	
Pierce	Building Service Employees	Janitor	$9.47		1	
Pierce	Building Service Employees	Shampooer	$10.08		1	
Pierce	Building Service Employees	Waxer	$10.08		1	
Pierce	Building Service Employees	Window Cleaner	$13.22		1	
Pierce	Cabinet Makers (In Shop)	Journey Level	$28.36		1	
Pierce	Carpenters	Acoustical Worker	$55.51	5D	4C	
Pierce	Carpenters	Bridge, Dock And Wharf Carpenters	$55.51	5D	4C	
Pierce	Carpenters	Carpenter	$55.51	5D	4C	
Pierce	Carpenters	Carpenters on Stationary Tools	$55.64	5D	4C	
Pierce	Carpenters	Creosoted Material	$55.61	5D	4C	
Pierce	Carpenters	Floor Finisher	$55.51	5D	4C	
Pierce	Carpenters	Floor Layer	$55.51	5D	4C	
Pierce	Carpenters	Scaffold Erector	$55.51	5D	4C	
Pierce	Cement Masons	Journey Level	$55.56	7A	1M	
Pierce	Divers & Tenders	Diver	$108.77	5D	4C	8A
Pierce	Divers & Tenders	Diver On Standby	$66.05	5D	4C	
Pierce	Divers & Tenders	Diver Tender	$59.88	5D	4C	
Pierce	Divers & Tenders	Surface Rcv & Rov Operator	$59.88	5D	4C	
Pierce	Divers & Tenders	Surface Rcv & Rov Operator Tender	$55.76	5A	4C	
Pierce	Dredge Workers	Assistant Engineer	$56.44	5D	3F	
Pierce	Dredge Workers	Assistant Mate (Deckhand)	$56.00	5D	3F	
Pierce	Dredge Workers	Boatmen	$56.44	5D	3F	
Pierce	Dredge Workers	Engineer Welder	$57.51	5D	3F	
Pierce	Dredge Workers	Leverman, Hydraulic	$58.67	5D	3F	
Pierce	Dredge Workers	Mates	$56.44	5D	3F	

Pierce	Dredge Workers	Oiler	$56.00	5D	3F	
Pierce	Drywall Applicator	Journey Level	$55.51	5D	1H	
Pierce	Drywall Tapers	Journey Level	$55.66	5P	1E	
Pierce	Electrical Fixture Maintenance Workers	Journey Level	$17.76		1	
Pierce	Electricians - Inside	Cable Splicer	$63.44	5C	1G	
Pierce	Electricians - Inside	Journey Level	$59.79	5C	1G	
Pierce	Electricians - Inside	Lead Covered Cable Splicer	$67.09	5C	1G	
Pierce	Electricians - Inside	Welder	$63.44	5C	1G	
Pierce	Electricians - Motor Shop	Craftsman	$15.37		1	
Pierce	Electricians - Motor Shop	Journey Level	$14.69		1	
Pierce	Electricians - Powerline Construction	Cable Splicer	$71.85	5A	4D	
Pierce	Electricians - Powerline Construction	Certified Line Welder	$65.71	5A	4D	
Pierce	Electricians - Powerline Construction	Groundperson	$44.12	5A	4D	
Pierce	Electricians - Powerline Construction	Heavy Line Equipment Operator	$65.71	5A	4D	
Pierce	Electricians - Powerline Construction	Journey Level Lineperson	$65.71	5A	4D	
Pierce	Electricians - Powerline Construction	Line Equipment Operator	$55.34	5A	4D	
Pierce	Electricians - Powerline Construction	Pole Sprayer	$65.71	5A	4D	
Pierce	Electricians - Powerline Construction	Powderperson	$49.16	5A	4D	
Pierce	Electronic Technicians	Journey Level	$32.39		1	
Pierce	Elevator Constructors	Mechanic	$85.45	7D	4A	
Pierce	Elevator Constructors	Mechanic In Charge	$92.35	7D	4A	
Pierce	Fabricated Precast Concrete Products	Journey Level - In-Factory Work Only	$9.47		1	
Pierce	Fence Erectors	Fence Erector	$22.56		1	
Pierce	Flaggers	Journey Level	$38.36	7A	3I	
Pierce	Glaziers	Journey Level	$58.31	7L	1Y	
Pierce	Heat & Frost Insulators And Asbestos Workers	Journeyman	$65.43	5J	1S	
Pierce	Heating Equipment Mechanics	Journey Level	$75.46	7F	1E	
Pierce	Hod Carriers & Mason Tenders	Journey Level	$46.66	7A	3I	
Pierce	Industrial Power Vacuum Cleaner	Journey Level	$9.47		1	
Pierce	Inland Boatmen	Boat Operator	$56.78	5B	1K	
Pierce	Inland Boatmen	Cook	$53.30	5B	1K	
Pierce	Inland Boatmen	Deckhand	$53.30	5B	1K	
Pierce	Inland Boatmen	Deckhand Engineer	$54.32	5B	1K	
Pierce	Inland Boatmen	Launch Operator	$55.57	5B	1K	
Pierce	Inland Boatmen	Mate	$55.57	5B	1K	
Pierce	Inspection/Cleaning/Sealing Of Sewer & Water Systems By Remote Control	Cleaner Operator, Foamer Operator	$9.73		1	

Pierce	Inspection/Cleaning/Sealing Of Sewer & Water Systems By Remote Control	Grout Truck Operator	$11.48		1	
Pierce	Inspection/Cleaning/Sealing Of Sewer & Water Systems By Remote Control	Head Operator	$12.78		1	
Pierce	Inspection/Cleaning/Sealing Of Sewer & Water Systems By Remote Control	Technician	$9.47		1	
Pierce	Inspection/Cleaning/Sealing Of Sewer & Water Systems By Remote Control	Tv Truck Operator	$10.53		1	
Pierce	Insulation Applicators	Journey Level	$55.51	5D	4C	
Pierce	Ironworkers	Journeyman	$65.53	7N	1O	
Pierce	Laborers	Air, Gas Or Electric Vibrating Screed	$45.25	7A	3I	
Pierce	Laborers	Airtrac Drill Operator	$46.66	7A	3I	
Pierce	Laborers	Ballast Regular Machine	$45.25	7A	3I	
Pierce	Laborers	Batch Weighman	$38.36	7A	3I	
Pierce	Laborers	Brick Pavers	$45.25	7A	3I	
Pierce	Laborers	Brush Cutter	$45.25	7A	3I	
Pierce	Laborers	Brush Hog Feeder	$45.25	7A	3I	
Pierce	Laborers	Burner	$45.25	7A	3I	
Pierce	Laborers	Caisson Worker	$46.66	7A	3I	
Pierce	Laborers	Carpenter Tender	$45.25	7A	3I	
Pierce	Laborers	Caulker	$45.25	7A	3I	
Pierce	Laborers	Cement Dumper-paving	$46.09	7A	3I	
Pierce	Laborers	Cement Finisher Tender	$45.25	7A	3I	
Pierce	Laborers	Change House Or Dry Shack	$45.25	7A	3I	
Pierce	Laborers	Chipping Gun (under 30 Lbs.)	$45.25	7A	3I	
Pierce	Laborers	Chipping Gun(30 Lbs. And Over)	$46.09	7A	3I	
Pierce	Laborers	Choker Setter	$45.25	7A	3I	
Pierce	Laborers	Chuck Tender	$45.25	7A	3I	
Pierce	Laborers	Clary Power Spreader	$46.09	7A	3I	
Pierce	Laborers	Clean-up Laborer	$45.25	7A	3I	
Pierce	Laborers	Concrete Dumper/chute Operator	$46.09	7A	3I	
Pierce	Laborers	Concrete Form Stripper	$45.25	7A	3I	
Pierce	Laborers	Concrete Placement Crew	$46.09	7A	3I	
Pierce	Laborers	Concrete Saw Operator/core Driller	$46.09	7A	3I	
Pierce	Laborers	Crusher Feeder	$38.36	7A	3I	
Pierce	Laborers	Curing Laborer	$45.25	7A	3I	
Pierce	Laborers	Demolition: Wrecking & Moving (incl. Charred Material)	$45.25	7A	3I	
Pierce	Laborers	Ditch Digger	$45.25	7A	3I	
Pierce	Laborers	Diver	$46.66	7A	3I	
Pierce	Laborers	Drill Operator (hydraulic,diamond)	$46.09	7A	3I	
Pierce	Laborers	Dry Stack Walls	$45.25	7A	3I	

Pierce	Laborers	Dump Person	$45.25	7A	3I	
Pierce	Laborers	Epoxy Technician	$45.25	7A	3I	
Pierce	Laborers	Erosion Control Worker	$45.25	7A	3I	
Pierce	Laborers	Faller & Bucker Chain Saw	$46.09	7A	3I	
Pierce	Laborers	Fine Graders	$45.25	7A	3I	
Pierce	Laborers	Firewatch	$38.36	7A	3I	
Pierce	Laborers	Form Setter	$45.25	7A	3I	
Pierce	Laborers	Gabian Basket Builders	$45.25	7A	3I	
Pierce	Laborers	General Laborer	$45.25	7A	3I	
Pierce	Laborers	Grade Checker & Transit Person	$46.66	7A	3I	
Pierce	Laborers	Grinders	$45.25	7A	3I	
Pierce	Laborers	Grout Machine Tender	$45.25	7A	3I	
Pierce	Laborers	Groutmen (pressure)including Post Tension Beams	$46.09	7A	3I	
Pierce	Laborers	Guardrail Erector	$45.25	7A	3I	
Pierce	Laborers	Hazardous Waste Worker (level A)	$46.66	7A	3I	
Pierce	Laborers	Hazardous Waste Worker (level B)	$46.09	7A	3I	
Pierce	Laborers	Hazardous Waste Worker (level C)	$45.25	7A	3I	
Pierce	Laborers	High Scaler	$46.66	7A	3I	
Pierce	Laborers	Jackhammer	$46.09	7A	3I	
Pierce	Laborers	Laserbeam Operator	$46.09	7A	3I	
Pierce	Laborers	Maintenance Person	$45.25	7A	3I	
Pierce	Laborers	Manhole Builder-mudman	$46.09	7A	3I	
Pierce	Laborers	Material Yard Person	$45.25	7A	3I	
Pierce	Laborers	Motorman-dinky Locomotive	$46.09	7A	3I	
Pierce	Laborers	Nozzleman (concrete Pump, Green Cutter When Using Combination Of High Pressure Air & Water On Concrete & Rock, Sandblast, Gunite, Shotcrete, Water Bla	$46.09	7A	3I	
Pierce	Laborers	Pavement Breaker	$46.09	7A	3I	
Pierce	Laborers	Pilot Car	$38.36	7A	3I	
Pierce	Laborers	Pipe Layer Lead	$46.66	7A	3I	
Pierce	Laborers	Pipe Layer/tailor	$46.09	7A	3I	
Pierce	Laborers	Pipe Pot Tender	$46.09	7A	3I	
Pierce	Laborers	Pipe Reliner	$46.09	7A	3I	
Pierce	Laborers	Pipe Wrapper	$46.09	7A	3I	
Pierce	Laborers	Pot Tender	$45.25	7A	3I	
Pierce	Laborers	Powderman	$46.66	7A	3I	
Pierce	Laborers	Powderman's Helper	$45.25	7A	3I	
Pierce	Laborers	Power Jacks	$46.09	7A	3I	
Pierce	Laborers	Railroad Spike Puller - Power	$46.09	7A	3I	
Pierce	Laborers	Raker - Asphalt	$46.66	7A	3I	
Pierce	Laborers	Re-timberman	$46.66	7A	3I	
Pierce	Laborers	Remote Equipment Operator	$46.09	7A	3I	
Pierce	Laborers	Rigger/signal Person	$46.09	7A	3I	
Pierce	Laborers	Rip Rap Person	$45.25	7A	3I	

Pierce	Laborers	Rivet Buster	$46.09	7A	3I	
Pierce	Laborers	Rodder	$46.09	7A	3I	
Pierce	Laborers	Scaffold Erector	$45.25	7A	3I	
Pierce	Laborers	Scale Person	$45.25	7A	3I	
Pierce	Laborers	Sloper (over 20")	$46.09	7A	3I	
Pierce	Laborers	Sloper Sprayer	$45.25	7A	3I	
Pierce	Laborers	Spreader (concrete)	$46.09	7A	3I	
Pierce	Laborers	Stake Hopper	$45.25	7A	3I	
Pierce	Laborers	Stock Piler	$45.25	7A	3I	
Pierce	Laborers	Tamper & Similar Electric, Air & Gas Operated Tools	$46.09	7A	3I	
Pierce	Laborers	Tamper (multiple & Self-propelled)	$46.09	7A	3I	
Pierce	Laborers	Timber Person - Sewer (lagger, Shorer & Cribber)	$46.09	7A	3I	
Pierce	Laborers	Toolroom Person (at Jobsite)	$45.25	7A	3I	
Pierce	Laborers	Topper	$45.25	7A	3I	
Pierce	Laborers	Track Laborer	$45.25	7A	3I	
Pierce	Laborers	Track Liner (power)	$46.09	7A	3I	
Pierce	Laborers	Traffic Control Laborer	$41.02	7A	3I	8R
Pierce	Laborers	Traffic Control Supervisor	$41.02	7A	3I	8R
Pierce	Laborers	Truck Spotter	$45.25	7A	3I	
Pierce	Laborers	Tugger Operator	$46.09	7A	3I	
Pierce	Laborers	Tunnel Work-Compressed Air Worker 0-30 psi	$83.12	7A	3I	8Q
Pierce	Laborers	Tunnel Work-Compressed Air Worker 30.01-44.00 psi	$88.15	7A	3I	8Q
Pierce	Laborers	Tunnel Work-Compressed Air Worker 44.01-54.00 psi	$91.83	7A	3I	8Q
Pierce	Laborers	Tunnel Work-Compressed Air Worker 54.01-60.00 psi	$97.53	7A	3I	8Q
Pierce	Laborers	Tunnel Work-Compressed Air Worker 60.01-64.00 psi	$99.65	7A	3I	8Q
Pierce	Laborers	Tunnel Work-Compressed Air Worker 64.01-68.00 psi	$104.75	7A	3I	8Q
Pierce	Laborers	Tunnel Work-Compressed Air Worker 68.01-70.00 psi	$106.65	7A	3I	8Q
Pierce	Laborers	Tunnel Work-Compressed Air Worker 70.01-72.00 psi	$108.65	7A	3I	8Q
Pierce	Laborers	Tunnel Work-Compressed Air Worker 72.01-74.00 psi	$110.65	7A	3I	8Q
Pierce	Laborers	Tunnel Work-Guage and Lock Tender	$46.76	7A	3I	8Q
Pierce	Laborers	Tunnel Work-Miner	$46.76	7A	3I	8Q
Pierce	Laborers	Vibrator	$46.09	7A	3I	
Pierce	Laborers	Vinyl Seamer	$45.25	7A	3I	
Pierce	Laborers	Watchman	$34.86	7A	3I	
Pierce	Laborers	Welder	$46.09	7A	3I	
Pierce	Laborers	Well Point Laborer	$46.09	7A	3I	

Pierce	Laborers	Window Washer/cleaner	$34.86	7A	3I	
Pierce	Laborers - Underground Sewer & Water	General Laborer & Topman	$45.25	7A	3I	
Pierce	Laborers - Underground Sewer & Water	Pipe Layer	$46.09	7A	3I	
Pierce	Landscape Construction	Irrigation Or Lawn Sprinkler Installers	$17.07		1	
Pierce	Landscape Construction	Landscape Equipment Operators Or Truck Drivers	$14.55		1	
Pierce	Landscape Construction	Landscaping Or Planting Laborers	$17.07		1	
Pierce	Lathers	Journey Level	$55.51	5D	1H	
Pierce	Marble Setters	Journey Level	$54.32	5A	1M	
Pierce	Metal Fabrication (In Shop)	Fitter	$15.25		1	
Pierce	Metal Fabrication (In Shop)	Laborer	$10.32		1	
Pierce	Metal Fabrication (In Shop)	Machine Operator	$13.98		1	
Pierce	Metal Fabrication (In Shop)	Welder	$13.98		1	
Pierce	Millwright	Journey Level	$57.01	5D	4C	
Pierce	Modular Buildings	Journey Level	$9.47		1	
Pierce	Painters	Journey Level	$40.60	6Z	2B	
Pierce	Pile Driver	Journey Level	$55.76	5D	4C	
Pierce	Plasterers	Journey Level	$53.20	7Q	1R	
Pierce	Playground & Park Equipment Installers	Journey Level	$9.73		1	
Pierce	Plumbers & Pipefitters	Journey Level	$65.52	5A	1G	
Pierce	Power Equipment Operators	Asphalt Plant Operator	$58.69	7A	3C	8P
Pierce	Power Equipment Operators	Assistant Engineers	$55.21	7A	3C	8P
Pierce	Power Equipment Operators	Barrier Machine (zipper)	$58.17	7A	3C	8P
Pierce	Power Equipment Operators	Batch Plant Operator: Concrete	$58.17	7A	3C	8P
Pierce	Power Equipment Operators	Bobcat	$55.21	7A	3C	8P
Pierce	Power Equipment Operators	Brokk - Remote Demolition Equipment	$55.21	7A	3C	8P
Pierce	Power Equipment Operators	Brooms	$55.21	7A	3C	8P
Pierce	Power Equipment Operators	Bump Cutter	$58.17	7A	3C	8P
Pierce	Power Equipment Operators	Cableways	$58.69	7A	3C	8P
Pierce	Power Equipment Operators	Chipper	$58.17	7A	3C	8P
Pierce	Power Equipment Operators	Compressor	$55.21	7A	3C	8P
Pierce	Power Equipment Operators	Concrete Pump: Truck Mount With Boom Attachment Over 42m	$58.69	7A	3C	8P
Pierce	Power Equipment Operators	Concrete Finish Machine -laser Screed	$55.21	7A	3C	8P
Pierce	Power Equipment Operators	Concrete Pump - Mounted Or Trailer High Pressure Line Pump, Pump High Pressure	$57.72	7A	3C	8P
Pierce	Power Equipment Operators	Concrete Pump: Truck Mount With Boom Attachment Up To 42m	$58.17	7A	3C	8P
Pierce	Power Equipment Operators	Conveyors	$57.72	7A	3C	8P
Pierce	Power Equipment Operators	Cranes, 100 Tons - 199 Tons, Or 150 Ft Of Boom (including Jib With Attachments)	$59.28	7A	3C	8P

Pierce	Power Equipment Operators	Cranes: 20 Tons Through 44 Tons With Attachments	$58.17	7A	3C	8P
Pierce	Power Equipment Operators	Cranes: 200 tons to 299 tons, or 250' of boom (including jib with attachments)	$59.88	7A	3C	8P
Pierce	Power Equipment Operators	Cranes: 300 tons and over, or 300' of boom (including jib with attachments)	$60.47	7A	3C	8P
Pierce	Power Equipment Operators	Cranes: 45 Tons Through 99 Tons, Under 150' Of Boom (including Jib With Attachments)	$58.69	7A	3C	8P
Pierce	Power Equipment Operators	Cranes: A-frame - 10 Tons And Under	$55.21	7A	3C	8P
Pierce	Power Equipment Operators	Cranes: Friction 200 tons and over. Tower Cranes: over 250' in height from base to boom.	$60.47	7A	3C	8P
Pierce	Power Equipment Operators	Cranes: Friction cranes through 199 tons	$59.88	7A	3C	8P
Pierce	Power Equipment Operators	Cranes: Through 19 Tons With Attachments A-frame Over 10 Tons	$57.72	7A	3C	8P
Pierce	Power Equipment Operators	Crusher	$58.17	7A	3C	8P
Pierce	Power Equipment Operators	Deck Engineer/deck Winches (power)	$58.17	7A	3C	8P
Pierce	Power Equipment Operators	Derricks, On Building Work	$58.69	7A	3C	8P
Pierce	Power Equipment Operators	Dozers D-9 & Under	$57.72	7A	3C	8P
Pierce	Power Equipment Operators	Drill Oilers: Auger Type, Truck Or Crane Mount	$57.72	7A	3C	8P
Pierce	Power Equipment Operators	Drilling Machine	$59.28	7A	3C	8P
Pierce	Power Equipment Operators	Elevator And Man-lift: Permanent And Shaft Type	$55.21	7A	3C	8P
Pierce	Power Equipment Operators	Finishing Machine, Bidwell And Gamaco & Similar Equipment	$58.17	7A	3C	8P
Pierce	Power Equipment Operators	Forklift: 3000 Lbs And Over With Attachments	$57.72	7A	3C	8P
Pierce	Power Equipment Operators	Forklifts: Under 3000 Lbs. With Attachments	$55.21	7A	3C	8P
Pierce	Power Equipment Operators	Grade Engineer: Using Blueprints, Cut Sheets,etc.	$58.17	7A	3C	8P
Pierce	Power Equipment Operators	Gradechecker/stakeman	$55.21	7A	3C	8P
Pierce	Power Equipment Operators	Guardrail punch/Auger	$58.17	7A	3C	8P
Pierce	Power Equipment Operators	Hard Tail End Dump Articulating Off- Road Equipment 45 Yards. & Over	$58.69	7A	3C	8P
Pierce	Power Equipment Operators	Hard Tail End Dump Articulating Off-road Equipment Under 45 Yards	$58.17	7A	3C	8P
Pierce	Power Equipment Operators	Horizontal/directional Drill Locator	$57.72	7A	3C	8P
Pierce	Power Equipment Operators	Horizontal/directional Drill Operator	$58.17	7A	3C	8P
Pierce	Power Equipment Operators	Hydralifts/Boom Trucks Over 10 Tons	$57.72	7A	3C	8P

Pierce	Power Equipment Operators	Hydralifts/boom Trucks, 10 Tons And Under	$55.21	7A	3C	8P
Pierce	Power Equipment Operators	Loader, Overhead 8 Yards. & Over	$59.28	7A	3C	8P
Pierce	Power Equipment Operators	Loader, Overhead, 6 Yards. But Not Including 8 Yards	$58.69	7A	3C	8P
Pierce	Power Equipment Operators	Loaders, Overhead Under 6 Yards	$58.17	7A	3C	8P
Pierce	Power Equipment Operators	Loaders, Plant Feed	$58.17	7A	3C	8P
Pierce	Power Equipment Operators	Loaders: Elevating Type Belt	$57.72	7A	3C	8P
Pierce	Power Equipment Operators	Locomotives, All	$58.17	7A	3C	8P
Pierce	Power Equipment Operators	Material Transfer Device	$58.17	7A	3C	8P
Pierce	Power Equipment Operators	Mechanics, All (Leadmen - $0.50 Per Hour Over Mechanic)	$59.28	7A	3C	8P
Pierce	Power Equipment Operators	Motor patrol graders	$58.69	7A	3C	8P
Pierce	Power Equipment Operators	Mucking Machine, Mole, Tunnel Drill, Boring, Road Header And/or Shield	$58.69	7A	3C	8P
Pierce	Power Equipment Operators	Oil Distributors, Blower Distribution & Mulch Seeding Operator	$55.21	7A	3C	8P
Pierce	Power Equipment Operators	Outside Hoists (elevators And Manlifts), Air Tuggers,strato	$57.72	7A	3C	8P
Pierce	Power Equipment Operators	Overhead, Bridge Type Crane: 20 Tons Through 44 Tons	$58.17	7A	3C	8P
Pierce	Power Equipment Operators	Overhead, Bridge Type: 100 Tons And Over	$59.28	7A	3C	8P
Pierce	Power Equipment Operators	Overhead, Bridge Type: 45 Tons Through 99 Tons	$58.69	7A	3C	8P
Pierce	Power Equipment Operators	Pavement Breaker	$55.21	7A	3C	8P
Pierce	Power Equipment Operators	Pile Driver (other Than Crane Mount)	$58.17	7A	3C	8P
Pierce	Power Equipment Operators	Plant Oiler - Asphalt, Crusher	$57.72	7A	3C	8P
Pierce	Power Equipment Operators	Posthole Digger, Mechanical	$55.21	7A	3C	8P
Pierce	Power Equipment Operators	Power Plant	$55.21	7A	3C	8P
Pierce	Power Equipment Operators	Pumps - Water	$55.21	7A	3C	8P
Pierce	Power Equipment Operators	Quad 9, HD 41, D10 And Over	$58.69	7A	3C	8P
Pierce	Power Equipment Operators	Quick Tower - No Cab, Under 100 Feet In Height Based To Boom	$55.21	7A	3C	8P
Pierce	Power Equipment Operators	Remote Control Operator On Rubber Tired Earth Moving Equipment	$58.69	7A	3C	8P
Pierce	Power Equipment Operators	Rigger And Bellman	$55.21	7A	3C	8P
Pierce	Power Equipment Operators	Rigger/Signal Person, Bellman (Certified)	$57.72	7A	3C	8P
Pierce	Power Equipment Operators	Rollagon	$58.69	7A	3C	8P
Pierce	Power Equipment Operators	Roller, Other Than Plant Mix	$55.21	7A	3C	8P
Pierce	Power Equipment Operators	Roller, Plant Mix Or Multi-lift Materials	$57.72	7A	3C	8P
Pierce	Power Equipment Operators	Roto-mill, Roto-grinder	$58.17	7A	3C	8P
Pierce	Power Equipment Operators	Saws - Concrete	$57.72	7A	3C	8P
Pierce	Power Equipment Operators	Scraper, Self Propelled Under 45 Yards	$58.17	7A	3C	8P

Pierce	Power Equipment Operators	Scrapers - Concrete & Carry All	$57.72	7A	3C	8P
Pierce	Power Equipment Operators	Scrapers, Self-propelled: 45 Yards And Over	$58.69	7A	3C	8P
Pierce	Power Equipment Operators	Service Engineers - Equipment	$57.72	7A	3C	8P
Pierce	Power Equipment Operators	Shotcrete/gunite Equipment	$55.21	7A	3C	8P
Pierce	Power Equipment Operators	Shovel , Excavator, Backhoe, Tractors Under 15 Metric Tons.	$57.72	7A	3C	8P
Pierce	Power Equipment Operators	Shovel, Excavator, Backhoe: Over 30 Metric Tons To 50 Metric Tons	$58.69	7A	3C	8P
Pierce	Power Equipment Operators	Shovel, Excavator, Backhoes, Tractors: 15 To 30 Metric Tons	$58.17	7A	3C	8P
Pierce	Power Equipment Operators	Shovel, Excavator, Backhoes: Over 50 Metric Tons To 90 Metric Tons	$59.28	7A	3C	8P
Pierce	Power Equipment Operators	Shovel, Excavator, Backhoes: Over 90 Metric Tons	$59.88	7A	3C	8P
Pierce	Power Equipment Operators	Slipform Pavers	$58.69	7A	3C	8P
Pierce	Power Equipment Operators	Spreader, Topsider & Screedman	$58.69	7A	3C	8P
Pierce	Power Equipment Operators	Subgrader Trimmer	$58.17	7A	3C	8P
Pierce	Power Equipment Operators	Tower Bucket Elevators	$57.72	7A	3C	8P
Pierce	Power Equipment Operators	Tower crane over 175' through 250' in height, base to boom	$59.88	7A	3C	8P
Pierce	Power Equipment Operators	Tower Crane Up: To 175' In Height, Base To Boom	$59.28	7A	3C	8P
Pierce	Power Equipment Operators	Transporters, All Track Or Truck Type	$58.69	7A	3C	8P
Pierce	Power Equipment Operators	Trenching Machines	$57.72	7A	3C	8P
Pierce	Power Equipment Operators	Truck Crane Oiler/driver - 100 Tons And Over	$58.17	7A	3C	8P
Pierce	Power Equipment Operators	Truck Crane Oiler/driver Under 100 Tons	$57.72	7A	3C	8P
Pierce	Power Equipment Operators	Truck Mount Portable Conveyor	$58.17	7A	3C	8P
Pierce	Power Equipment Operators	Welder	$58.69	7A	3C	8P
Pierce	Power Equipment Operators	Wheel Tractors, Farmall Type	$55.21	7A	3C	8P
Pierce	Power Equipment Operators	Yo Yo Pay Dozer	$58.17	7A	3C	8P
Pierce	Power Equipment Operators-Underground Sewer & Water	Asphalt Plant Operator	$58.69	7A	3C	8P
Pierce	Power Equipment Operators-Underground Sewer & Water	Assistant Engineers	$55.21	7A	3C	8P
Pierce	Power Equipment Operators-Underground Sewer & Water	Barrier Machine (zipper)	$58.17	7A	3C	8P
Pierce	Power Equipment Operators-Underground Sewer & Water	Batch Plant Operator: Concrete	$58.17	7A	3C	8P
Pierce	Power Equipment Operators-Underground Sewer & Water	Bobcat	$55.21	7A	3C	8P
Pierce	Power Equipment Operators-Underground Sewer & Water	Brokk - Remote Demolition Equipment	$55.21	7A	3C	8P
Pierce	Power Equipment Operators-Underground Sewer & Water	Brooms	$55.21	7A	3C	8P
Pierce	Power Equipment Operators-Underground Sewer & Water	Bump Cutter	$58.17	7A	3C	8P

Pierce	Power Equipment Operators-Underground Sewer & Water	Cableways	$58.69	7A	3C	8P
Pierce	Power Equipment Operators-Underground Sewer & Water	Chipper	$58.17	7A	3C	8P
Pierce	Power Equipment Operators-Underground Sewer & Water	Compressor	$55.21	7A	3C	8P
Pierce	Power Equipment Operators-Underground Sewer & Water	Concrete Pump: Truck Mount With Boom Attachment Over 42m	$58.69	7A	3C	8P
Pierce	Power Equipment Operators-Underground Sewer & Water	Concrete Finish Machine -laser Screed	$55.21	7A	3C	8P
Pierce	Power Equipment Operators-Underground Sewer & Water	Concrete Pump - Mounted Or Trailer High Pressure Line Pump, Pump High Pressure	$57.72	7A	3C	8P
Pierce	Power Equipment Operators-Underground Sewer & Water	Concrete Pump: Truck Mount With Boom Attachment Up To 42m	$58.17	7A	3C	8P
Pierce	Power Equipment Operators-Underground Sewer & Water	Conveyors	$57.72	7A	3C	8P
Pierce	Power Equipment Operators-Underground Sewer & Water	Cranes, 100 Tons - 199 Tons, Or 150 Ft Of Boom (including Jib With Attachments)	$59.28	7A	3C	8P
Pierce	Power Equipment Operators-Underground Sewer & Water	Cranes, 200 tons to 299 tons, or 250' of boom (including jib with attachments)	$59.88	7A	3C	8P
Pierce	Power Equipment Operators-Underground Sewer & Water	Cranes, Over 300 Tons, Or 300' Of Boom Including Jib With Attachments	$60.47	7A	3C	8P
Pierce	Power Equipment Operators-Underground Sewer & Water	Cranes: 20 Tons Through 44 Tons With Attachments	$58.17	7A	3C	8P
Pierce	Power Equipment Operators-Underground Sewer & Water	cranes: 300 tons and over, or 300' of boom (including jib with attachments)	$60.47	7A	3C	8P
Pierce	Power Equipment Operators-Underground Sewer & Water	Cranes: 45 Tons Through 99 Tons, Under 150' Of Boom (including Jib With Attachments)	$58.69	7A	3C	8P
Pierce	Power Equipment Operators-Underground Sewer & Water	Cranes: A-frame - 10 Tons And Under	$55.21	7A	3C	8P
Pierce	Power Equipment Operators-Underground Sewer & Water	Cranes: Friction 200 tons and over. Tower Cranes: over 250' in height from base to boom.	$60.47	7A	3C	8P
Pierce	Power Equipment Operators-Underground Sewer & Water	Cranes: Friction cranes through 199 tons	$59.88	7A	3C	8P
Pierce	Power Equipment Operators-Underground Sewer & Water	Cranes: Through 19 Tons With Attachments A-frame Over 10 Tons	$57.72	7A	3C	8P
Pierce	Power Equipment Operators-Underground Sewer & Water	Crusher	$58.17	7A	3C	8P
Pierce	Power Equipment Operators-Underground Sewer & Water	Deck Engineer/deck Winches (power)	$58.17	7A	3C	8P
Pierce	Power Equipment Operators-Underground Sewer & Water	Derricks, On Building Work	$58.69	7A	3C	8P
Pierce	Power Equipment Operators-Underground Sewer & Water	Dozers D-9 & Under	$57.72	7A	3C	8P
Pierce	Power Equipment Operators-Underground Sewer & Water	Drill Oilers: Auger Type, Truck Or Crane Mount	$57.72	7A	3C	8P

Pierce	Power Equipment Operators-Underground Sewer & Water	Drilling Machine	$59.28	7A	3C	8P
Pierce	Power Equipment Operators-Underground Sewer & Water	Elevator And Man-lift: Permanent And Shaft Type	$55.21	7A	3C	8P
Pierce	Power Equipment Operators-Underground Sewer & Water	Finishing Machine, Bidwell And Gamaco & Similar Equipment	$58.17	7A	3C	8P
Pierce	Power Equipment Operators-Underground Sewer & Water	Forklift: 3000 Lbs And Over With Attachments	$57.72	7A	3C	8P
Pierce	Power Equipment Operators-Underground Sewer & Water	Forklifts: Under 3000 Lbs. With Attachments	$55.21	7A	3C	8P
Pierce	Power Equipment Operators-Underground Sewer & Water	Grade Engineer: Using Blueprints, Cut Sheets,etc.	$58.17	7A	3C	8P
Pierce	Power Equipment Operators-Underground Sewer & Water	Gradechecker/stakeman	$55.21	7A	3C	8P
Pierce	Power Equipment Operators-Underground Sewer & Water	Guardrail punch/Auger	$58.17	7A	3C	8P
Pierce	Power Equipment Operators-Underground Sewer & Water	Hard Tail End Dump Articulating Off- Road Equipment 45 Yards. & Over	$58.69	7A	3C	8P
Pierce	Power Equipment Operators-Underground Sewer & Water	Hard Tail End Dump Articulating Off-road Equipment Under 45 Yards	$58.17	7A	3C	8P
Pierce	Power Equipment Operators-Underground Sewer & Water	Horizontal/directional Drill Locator	$57.72	7A	3C	8P
Pierce	Power Equipment Operators-Underground Sewer & Water	Horizontal/directional Drill Operator	$58.17	7A	3C	8P
Pierce	Power Equipment Operators-Underground Sewer & Water	Hydralifts/Boom Trucks Over 10 Tons	$57.72	7A	3C	8P
Pierce	Power Equipment Operators-Underground Sewer & Water	Hydralifts/boom Trucks, 10 Tons And Under	$55.21	7A	3C	8P
Pierce	Power Equipment Operators-Underground Sewer & Water	Loader, Overhead 8 Yards. & Over	$59.28	7A	3C	8P
Pierce	Power Equipment Operators-Underground Sewer & Water	Loader, Overhead, 6 Yards. But Not Including 8 Yards	$58.69	7A	3C	8P
Pierce	Power Equipment Operators-Underground Sewer & Water	Loaders, Overhead Under 6 Yards	$58.17	7A	3C	8P
Pierce	Power Equipment Operators-Underground Sewer & Water	Loaders, Plant Feed	$58.17	7A	3C	8P
Pierce	Power Equipment Operators-Underground Sewer & Water	Loaders: Elevating Type Belt	$57.72	7A	3C	8P
Pierce	Power Equipment Operators-Underground Sewer & Water	Locomotives, All	$58.17	7A	3C	8P
Pierce	Power Equipment Operators-Underground Sewer & Water	Material Transfer Device	$58.17	7A	3C	8P
Pierce	Power Equipment Operators-Underground Sewer & Water	Mechanics, All (Leadmen - $0.50 Per Hour Over Mechanic)	$59.28	7A	3C	8P
Pierce	Power Equipment Operators-Underground Sewer & Water	Motor patrol graders	$58.69	7A	3C	8P
Pierce	Power Equipment Operators-Underground Sewer & Water	Mucking Machine, Mole, Tunnel Drill, Boring, Road Header And/or Shield	$58.69	7A	3C	8P
Pierce	Power Equipment Operators-Underground Sewer & Water	Oil Distributors, Blower Distribution & Mulch Seeding	$55.21	7A	3C	8P

		Operator				
Pierce	Power Equipment Operators-Underground Sewer & Water	Outside Hoists (elevators And Manlifts), Air Tuggers,strato	$57.72	7A	3C	8P
Pierce	Power Equipment Operators-Underground Sewer & Water	Overhead, Bridge Type Crane: 20 Tons Through 44 Tons	$58.17	7A	3C	8P
Pierce	Power Equipment Operators-Underground Sewer & Water	Overhead, Bridge Type: 100 Tons And Over	$59.28	7A	3C	8P
Pierce	Power Equipment Operators-Underground Sewer & Water	Overhead, Bridge Type: 45 Tons Through 99 Tons	$58.69	7A	3C	8P
Pierce	Power Equipment Operators-Underground Sewer & Water	Pavement Breaker	$55.21	7A	3C	8P
Pierce	Power Equipment Operators-Underground Sewer & Water	Pile Driver (other Than Crane Mount)	$58.17	7A	3C	8P
Pierce	Power Equipment Operators-Underground Sewer & Water	Plant Oiler - Asphalt, Crusher	$57.72	7A	3C	8P
Pierce	Power Equipment Operators-Underground Sewer & Water	Posthole Digger, Mechanical	$55.21	7A	3C	8P
Pierce	Power Equipment Operators-Underground Sewer & Water	Power Plant	$55.21	7A	3C	8P
Pierce	Power Equipment Operators-Underground Sewer & Water	Pumps - Water	$55.21	7A	3C	8P
Pierce	Power Equipment Operators-Underground Sewer & Water	Quad 9, HD 41, D10 And Over	$58.69	7A	3C	8P
Pierce	Power Equipment Operators-Underground Sewer & Water	Quick Tower - No Cab, Under 100 Feet In Height Based To Boom	$55.21	7A	3C	8P
Pierce	Power Equipment Operators-Underground Sewer & Water	Remote Control Operator On Rubber Tired Earth Moving Equipment	$58.69	7A	3C	8P
Pierce	Power Equipment Operators-Underground Sewer & Water	Rigger And Bellman	$55.21	7A	3C	8P
Pierce	Power Equipment Operators-Underground Sewer & Water	Rigger/Signal Person, Bellman (Certified)	$57.72	7A	3C	8P
Pierce	Power Equipment Operators-Underground Sewer & Water	Rollagon	$58.69	7A	3C	8P
Pierce	Power Equipment Operators-Underground Sewer & Water	Roller, Other Than Plant Mix	$55.21	7A	3C	8P
Pierce	Power Equipment Operators-Underground Sewer & Water	Roller, Plant Mix Or Multi-lift Materials	$57.72	7A	3C	8P
Pierce	Power Equipment Operators-Underground Sewer & Water	Roto-mill, Roto-grinder	$58.17	7A	3C	8P
Pierce	Power Equipment Operators-Underground Sewer & Water	Saws - Concrete	$57.72	7A	3C	8P
Pierce	Power Equipment Operators-Underground Sewer & Water	Scraper, Self Propelled Under 45 Yards	$58.17	7A	3C	8P
Pierce	Power Equipment Operators-Underground Sewer & Water	Scrapers - Concrete & Carry All	$57.72	7A	3C	8P
Pierce	Power Equipment Operators-Underground Sewer & Water	Scrapers, Self-propelled: 45 Yards And Over	$58.69	7A	3C	8P
Pierce	Power Equipment Operators-Underground Sewer & Water	Service Engineers - Equipment	$57.72	7A	3C	8P
Pierce	Power Equipment Operators-Underground Sewer & Water	Shotcrete/gunite Equipment	$55.21	7A	3C	8P
Pierce	Power Equipment Operators-	Shovel , Excavator, Backhoe,	$57.72	7A	3C	8P

	Underground Sewer & Water	Tractors Under 15 Metric Tons.				
Pierce	Power Equipment Operators-Underground Sewer & Water	Shovel, Excavator, Backhoe: Over 30 Metric Tons To 50 Metric Tons	$58.69	7A	3C	8P
Pierce	Power Equipment Operators-Underground Sewer & Water	Shovel, Excavator, Backhoes, Tractors: 15 To 30 Metric Tons	$58.17	7A	3C	8P
Pierce	Power Equipment Operators-Underground Sewer & Water	Shovel, Excavator, Backhoes: Over 50 Metric Tons To 90 Metric Tons	$59.28	7A	3C	8P
Pierce	Power Equipment Operators-Underground Sewer & Water	Shovel, Excavator, Backhoes: Over 90 Metric Tons	$59.88	7A	3C	8P
Pierce	Power Equipment Operators-Underground Sewer & Water	Slipform Pavers	$58.69	7A	3C	8P
Pierce	Power Equipment Operators-Underground Sewer & Water	Spreader, Topsider & Screedman	$58.69	7A	3C	8P
Pierce	Power Equipment Operators-Underground Sewer & Water	Subgrader Trimmer	$58.17	7A	3C	8P
Pierce	Power Equipment Operators-Underground Sewer & Water	Tower Bucket Elevators	$57.72	7A	3C	8P
Pierce	Power Equipment Operators-Underground Sewer & Water	Tower crane over 175' through 250' in height, base to boom	$59.88	7A	3C	8P
Pierce	Power Equipment Operators-Underground Sewer & Water	Tower Crane: Up To 175' In Height, Base To Boom	$59.28	7A	3C	8P
Pierce	Power Equipment Operators-Underground Sewer & Water	Transporters, All Track Or Truck Type	$58.69	7A	3C	8P
Pierce	Power Equipment Operators-Underground Sewer & Water	Trenching Machines	$57.72	7A	3C	8P
Pierce	Power Equipment Operators-Underground Sewer & Water	Truck Crane Oiler/driver - 100 Tons And Over	$58.17	7A	3C	8P
Pierce	Power Equipment Operators-Underground Sewer & Water	Truck Crane Oiler/driver Under 100 Tons	$57.72	7A	3C	8P
Pierce	Power Equipment Operators-Underground Sewer & Water	Truck Mount Portable Conveyor	$58.17	7A	3C	8P
Pierce	Power Equipment Operators-Underground Sewer & Water	Welder	$58.69	7A	3C	8P
Pierce	Power Equipment Operators-Underground Sewer & Water	Wheel Tractors, Farmall Type	$55.21	7A	3C	8P
Pierce	Power Equipment Operators-Underground Sewer & Water	Yo Yo Pay Dozer	$58.17	7A	3C	8P
Pierce	Power Line Clearance Tree Trimmers	Journey Level In Charge	$47.08	5A	4A	
Pierce	Power Line Clearance Tree Trimmers	Spray Person	$44.64	5A	4A	
Pierce	Power Line Clearance Tree Trimmers	Tree Equipment Operator	$47.08	5A	4A	
Pierce	Power Line Clearance Tree Trimmers	Tree Trimmer	$42.01	5A	4A	
Pierce	Power Line Clearance Tree Trimmers	Tree Trimmer Groundperson	$31.65	5A	4A	
Pierce	Refrigeration & Air Conditioning Mechanics	Mechanic	$66.81	5A	1G	
Pierce	Residential Brick Mason	Journey Level	$23.77		1	
Pierce	Residential Carpenters	Journey Level	$41.69	5D	4C	

Pierce	Residential Cement Masons	Journey Level	$55.56	7A	1M	
Pierce	Residential Drywall Applicators	Journey Level	$41.69	5D	4C	
Pierce	Residential Drywall Tapers	Journey Level	$55.66	5P	1E	
Pierce	Residential Electricians	JOURNEY LEVEL	$29.29		1	
Pierce	Residential Glaziers	Journey Level	$38.40	7L	1H	
Pierce	Residential Insulation Applicators	Journey Level	$18.70		1	
Pierce	Residential Laborers	Journey Level	$20.99		1	
Pierce	Residential Marble Setters	Journey Level	$22.67		1	
Pierce	Residential Painters	Journey Level	$26.13		1	
Pierce	Residential Plumbers & Pipefitters	Journey Level	$47.77	5A	1G	
Pierce	Residential Refrigeration & Air Conditioning Mechanics	Journey Level	$38.75	5A	1G	
Pierce	Residential Sheet Metal Workers	Journey Level (Field or Shop)	$45.99	7F	1R	
Pierce	Residential Soft Floor Layers	Journey Level	$45.86	5A	3D	
Pierce	Residential Sprinkler Fitters (Fire Protection)	Journey Level	$42.73	5C	2R	
Pierce	Residential Stone Masons	Journey Level	$22.67		1	
Pierce	Residential Terrazzo Workers	Journey Level	$9.47		1	
Pierce	Residential Terrazzo/Tile Finishers	Journey Level	$19.32		1	
Pierce	Residential Tile Setters	Journey Level	$9.47		1	
Pierce	Roofers	Journey Level	$46.12	5A	2O	
Pierce	Roofers	Using Irritable Bituminous Materials	$49.12	5A	2O	
Pierce	Sheet Metal Workers	Journey Level (Field or Shop)	$75.46	7F	1E	
Pierce	Shipbuilding & Ship Repair	Boilermaker	$41.72	7M	1H	
Pierce	Shipbuilding & Ship Repair	Carpenter	$33.71	6E	1B	
Pierce	Shipbuilding & Ship Repair	Electrician	$33.71	6E	1B	
Pierce	Shipbuilding & Ship Repair	Heat & Frost Insulator	$65.43	5J	1S	
Pierce	Shipbuilding & Ship Repair	Laborer	$19.10		1	
Pierce	Shipbuilding & Ship Repair	Machinist	$33.71	6E	1B	
Pierce	Shipbuilding & Ship Repair	Operator	$33.71	6E	1B	
Pierce	Shipbuilding & Ship Repair	Painter	$38.74	6A	1R	
Pierce	Shipbuilding & Ship Repair	Pipefitter	$33.71	6E	1B	
Pierce	Shipbuilding & Ship Repair	Rigger	$15.77		1	
Pierce	Shipbuilding & Ship Repair	Sandblaster	$38.74	6A	1R	
Pierce	Shipbuilding & Ship Repair	SHEET METAL	$35.83		1	
Pierce	Shipbuilding & Ship Repair	Shipfitter	$33.71	6E	1B	
Pierce	Shipbuilding & Ship Repair	Trucker	$15.75		1	
Pierce	Shipbuilding & Ship Repair	Warehouse	$13.75		1	
Pierce	Shipbuilding & Ship Repair	Welder/burner	$33.71	6E	1B	
Pierce	Sign Makers & Installers (Electrical)	Sign Installer	$26.17		1	
Pierce	Sign Makers & Installers (Electrical)	Sign Maker	$20.33		1	
Pierce	Sign Makers & Installers (Non-Electrical)	Sign Installer	$33.43		1	
Pierce	Sign Makers & Installers (Non-Electrical)	Sign Maker	$22.79		1	

Pierce	Soft Floor Layers	Journey Level	$45.86	5A	3D	
Pierce	Solar Controls For Windows	Journey Level	$10.31		1	
Pierce	Sprinkler Fitters (Fire Protection)	Journey Level	$72.49	5C	1X	
Pierce	Stage Rigging Mechanics (Non Structural)	Journey Level	$13.23		1	
Pierce	Stone Masons	Journey Level	$54.32	5A	1M	
Pierce	Street And Parking Lot Sweeper Workers	Journey Level	$21.69		1	
Pierce	Surveyors	All Classifications	$35.68	Null	1	
Pierce	Telecommunication Technicians	Journey Level	$28.29		1	
Pierce	Telephone Line Construction - Outside	Cable Splicer	$37.60	5A	2B	
Pierce	Telephone Line Construction - Outside	Hole Digger/Ground Person	$20.79	5A	2B	
Pierce	Telephone Line Construction - Outside	Installer (Repairer)	$36.02	5A	2B	
Pierce	Telephone Line Construction - Outside	Special Aparatus Installer I	$37.60	5A	2B	
Pierce	Telephone Line Construction - Outside	Special Apparatus Installer II	$36.82	5A	2B	
Pierce	Telephone Line Construction - Outside	Telephone Equipment Operator (Heavy)	$37.60	5A	2B	
Pierce	Telephone Line Construction - Outside	Telephone Equipment Operator (Light)	$34.94	5A	2B	
Pierce	Telephone Line Construction - Outside	Telephone Lineperson	$34.93	5A	2B	
Pierce	Telephone Line Construction - Outside	Television Groundperson	$19.73	5A	2B	
Pierce	Telephone Line Construction - Outside	Television Lineperson/Installer	$26.31	5A	2B	
Pierce	Telephone Line Construction - Outside	Television System Technician	$31.50	5A	2B	
Pierce	Telephone Line Construction - Outside	Television Technician	$28.23	5A	2B	
Pierce	Telephone Line Construction - Outside	Tree Trimmer	$34.93	5A	2B	
Pierce	Terrazzo Workers	Journey Level	$48.86	5A	1M	
Pierce	Tile Setters	Journey Level	$48.86	5A	1M	
Pierce	Tile, Marble & Terrazzo Finishers	Journey Level	$20.74		1	
Pierce	Traffic Control Stripers	Journey Level	$44.35	7A	1K	
Pierce	Truck Drivers	Asphalt Mix	$22.49		1	
Pierce	Truck Drivers	Dump Truck	$22.56		1	
Pierce	Truck Drivers	Dump Truck And Trailer	$22.56		1	
Pierce	Truck Drivers	Other Trucks	$30.20		1	
Pierce	Truck Drivers	Transit Mixer	$33.17	6I	2H	
Pierce	Well Drillers & Irrigation Pump Installers	Irrigation Pump Installer	$16.09		1	
Pierce	Well Drillers & Irrigation Pump Installers	Oiler	$15.39		1	
Pierce	Well Drillers & Irrigation Pump Installers	Well Driller	$18.30		1	

BENEFIT CODE KEY - EFFECTIVE 03-03-2011 THRU 08-31-2011

****

OVERTIME CODES

OVERTIME CALCULATIONS ARE BASED ON THE HOURLY RATE ACTUALLY PAID TO THE WORKER. ON PUBLIC WORKS PROJECTS, THE HOURLY RATE MUST BE NOT LESS THAN THE PREVAILING RATE OF WAGE MINUS THE HOURLY RATE OF THE COST OF FRINGE BENEFITS ACTUALLY PROVIDED FOR THE WORKER.

1. ALL HOURS WORKED IN EXCESS OF EIGHT (8) HOURS PER DAY OR FORTY (40) HOURS PER WEEK SHALL BE PAID AT ONE AND ONE-HALF TIMES THE HOURLY RATE OF WAGE.

B. ALL HOURS WORKED ON SATURDAYS SHALL BE PAID AT ONE AND ONE-HALF TIMES THE HOURLY RATE OF WAGE. ALL HOURS WORKED ON SUNDAYS AND HOLIDAYS SHALL BE PAID AT DOUBLE THE HOURLY RATE OF WAGE.

C. THE FIRST TWO (2) HOURS AFTER EIGHT (8) REGULAR HOURS MONDAY THROUGH FRIDAY AND THE FIRST TEN (10) HOURS ON SATURDAY SHALL BE PAID AT ONE AND ONE-HALF TIMES THE HOURLY RATE OF WAGE. ALL OTHER OVERTIME HOURS AND ALL HOURS WORKED ON SUNDAYS AND HOLIDAYS SHALL BE PAID AT DOUBLE THE HOURLY RATE OF WAGE.

D. THE FIRST TWO (2) HOURS BEFORE OR AFTER A FIVE - EIGHT (8) HOUR WORKWEEK DAY OR A FOUR - TEN (10) HOUR WORKWEEK DAY AND THE FIRST EIGHT (8) HOURS WORKED THE NEXT DAY AFTER EITHER WORKWEEK SHALL BE PAID AT ONE AND ONE-HALF TIMES THE HOURLY RATE OF WAGE. ALL ADDITIONAL HOURS WORKED AND ALL WORKED ON SUNDAYS AND HOLIDAYS SHALL BE PAID AT DOUBLE THE HOURLY RATE OF WAGE.

E. THE FIRST TWO (2) HOURS AFTER EIGHT (8) REGULAR HOURS MONDAY THROUGH FRIDAY AND THE FIRST EIGHT (8) HOURS ON SATURDAY SHALL BE PAID AT ONE AND ONE-HALF TIMES THE HOURLY RATE OF WAGE. ALL OTHER HOURS WORKED MONDAY THROUGH SATURDAY, AND ALL HOURS WORKED ON SUNDAYS AND HOLIDAYS SHALL BE PAID AT DOUBLE THE HOURLY RATE OF WAGE.

F. THE FIRST TWO (2) HOURS AFTER EIGHT (8) REGULAR HOURS MONDAY THROUGH FRIDAY AND THE FIRST TEN (10) HOURS ON SATURDAY SHALL BE PAID AT ONE AND ONE-HALF TIMES THE HOURLY RATE OF WAGE. ALL OTHER OVERTIME HOURS WORKED, EXCEPT LABOR DAY, SHALL BE PAID AT DOUBLE THE HOURLY RATE OF WAGE. ALL HOURS WORKED ON LABOR DAY SHALL BE PAID AT THREE TIMES THE HOURLY RATE OF WAGE.

G. THE FIRST TEN (10) HOURS WORKED ON SATURDAYS AND THE FIRST TEN (10) HOURS WORKED ON A FIFTH CALENDAR WEEKDAY IN A FOUR - TEN HOUR SCHEDULE, SHALL BE PAID AT ONE AND ONE-HALF TIMES THE HOURLY RATE OF WAGE. ALL HOURS WORKED IN EXCESS OF TEN (10) HOURS PER DAY MONDAY THROUGH SATURDAY AND ALL HOURS WORKED ON SUNDAYS AND HOLIDAYS SHALL BE PAID AT DOUBLE THE HOURLY RATE OF WAGE.

H. ALL HOURS WORKED ON SATURDAYS (EXCEPT MAKEUP DAYS IF WORK IS LOST DUE TO INCLEMENT WEATHER CONDITIONS OR EQUIPMENT BREAKDOWN) SHALL BE PAID AT ONE AND ONE-HALF TIMES THE HOURLY RATE OF WAGE. ALL HOURS WORKED MONDAY THROUGH SATURDAY OVER TWELVE (12) HOURS AND ALL HOURS WORKED ON SUNDAYS AND HOLIDAYS SHALL BE PAID AT DOUBLE THE HOURLY RATE OF WAGE.

I. ALL HOURS WORKED ON SUNDAYS AND HOLIDAYS SHALL ALSO BE PAID AT ONE AND DOUBLE THE HOURLY RATE OF WAGE.

J. THE FIRST TWO (2) HOURS AFTER EIGHT (8) REGULAR HOURS MONDAY THROUGH FRIDAY AND THE FIRST TEN (10) HOURS ON SATURDAY SHALL BE PAID AT ONE AND ONE-HALF TIMES THE HOURLY RATE OF WAGE. ALL HOURS WORKED OVER TEN (10) HOURS MONDAY THROUGH SATURDAY, SUNDAYS AND HOLIDAYS SHALL BE PAID AT DOUBLE THE HOURLY RATE OF WAGE.

K. ALL HOURS WORKED ON SATURDAYS AND SUNDAYS SHALL BE PAID AT ONE AND ONE-HALF TIMES THE HOURLY RATE OF WAGE. ALL HOURS WORKED ON HOLIDAYS SHALL BE PAID AT DOUBLE THE HOURLY RATE OF WAGE.

L. ALL HOURS WORKED IN EXCESS OF TEN (10) HOURS PER DAY MONDAY THROUGH SATURDAY AND ALL HOURS WORKED ON SUNDAYS AND HOLIDAYS SHALL BE PAID AT DOUBLE THE HOURLY RATE OF WAGE.

M. ALL HOURS WORKED ON SATURDAYS (EXCEPT MAKEUP DAYS IF WORK IS LOST DUE TO INCLEMENT WEATHER CONDITIONS) SHALL BE PAID AT ONE AND ONE-HALF TIMES THE HOURLY RATE OF WAGE. ALL HOURS WORKED ON SUNDAYS AND HOLIDAYS SHALL BE PAID AT DOUBLE THE HOURLY RATE OF WAGE.

N. ALL HOURS WORKED ON SATURDAYS (EXCEPT MAKEUP DAYS) SHALL BE PAID AT ONE AND ONE-HALF TIMES THE HOURLY RATE OF WAGE. ALL HOURS WORKED ON SUNDAYS AND HOLIDAYS SHALL BE PAID AT DOUBLE THE HOURLY RATE OF WAGE.

O. THE FIRST TEN (10) HOURS WORKED ON SATURDAY SHALL BE PAID AT ONE AND ONE-HALF TIMES THE HOURLY RATE OF WAGE. ALL HOURS WORKED ON SUNDAYS, HOLIDAYS AND AFTER TWELVE (12) HOURS, MONDAY THROUGH FRIDAY, AND AFTER TEN (10) HOURS ON SATURDAY SHALL BE PAID AT DOUBLE THE HOURLY RATE OF WAGE.

P. ALL HOURS WORKED ON SATURDAYS (EXCEPT MAKEUP DAYS IF CIRCUMSTANCES WARRANT) AND SUNDAYS SHALL BE PAID AT ONE AND ONE-HALF TIMES THE HOURLY RATE OF WAGE. ALL HOURS WORKED ON HOLIDAYS SHALL BE PAID AT DOUBLE THE HOURLY RATE OF WAGE.

1. Q. THE FIRST TWO (2) HOURS AFTER EIGHT (8) REGULAR HOURS MONDAY THROUGH FRIDAY AND UP TO TEN (10) HOURS WORKED ON SATURDAYS SHALL BE PAID AT ONE AND ONE-HALF TIMES THE HOURLY RATE OF WAGE. ALL HOURS WORKED IN EXCESS OF TEN (10) HOURS PER DAY MONDAY THROUGH SATURDAY AND ALL HOURS WORKED ON SUNDAYS AND HOLIDAYS (EXCEPT CHRISTMAS DAY) SHALL BE PAID AT DOUBLE THE HOURLY RATE OF WAGE. ALL HOURS WORKED ON CHRISTMAS DAY SHALL BE PAID AT TWO AND ONE-HALF TIMES THE HOURLY RATE OF WAGE.

R. ALL HOURS WORKED ON SUNDAYS AND HOLIDAYS SHALL BE PAID AT TWO TIMES THE HOURLY RATE OF WAGE.

S. THE FIRST TWO (2) HOURS AFTER EIGHT (8) REGULAR HOURS MONDAY THROUGH FRIDAY AND THE FIRST EIGHT (8) HOURS ON SATURDAY SHALL BE PAID AT ONE AND ONE-HALF TIMES THE HOURLY RATE OF WAGE. ALL HOURS WORKED ON HOLIDAYS AND ALL OTHER OVERTIME HOURS WORKED, EXCEPT LABOR DAY, SHALL BE PAID AT DOUBLE THE HOURLY RATE OF WAGE. ALL HOURS WORKED ON LABOR DAY SHALL BE PAID AT THREE TIMES THE HOURLY RATE OF WAGE.

T. WORK PERFORMED IN EXCESS OF EIGHT (8) HOURS OF STRAIGHT TIME PER DAY, OR TEN (10) HOURS OF STRAIGHT TIME PER DAY WHEN FOUR TEN (10) HOUR SHIFTS ARE ESTABLISHED, OR FORTY (40) HOURS OF STRAIGHT TIME PER WEEK, MONDAY THROUGH FRIDAY, OR OUTSIDE THE NORMAL SHIFT, AND ALL WORK ON SATURDAYS SHALL BE PAID AT TIME AND ONE-HALF THE STRAIGHT TIME RATE. HOURS WORKED OVER TWELVE HOURS (12) IN A SINGLE SHIFT AND ALL WORK PERFORMED AFTER 6:00 PM SATURDAY TO 6:00 AM MONDAY AND HOLIDAYS SHALL BE PAID AT DOUBLE THE STRAIGHT TIME RATE OF PAY. THE EMPLOYER SHALL HAVE THE SOLE DISCRETION TO ASSIGN OVERTIME WORK TO EMPLOYEES. PRIMARY CONSIDERATION FOR OVERTIME WORK SHALL BE GIVEN TO EMPLOYEES REGULARLY ASSIGNED TO THE WORK TO BE PERFORMED ON OVERTIME SITUATIONS. AFTER AN EMPLOYEE HAS WORKED EIGHT (8) HOURS AT AN APPLICABLE OVERTIME RATE, ALL ADDITIONAL HOURS SHALL BE AT THE APPLICABLE OVERTIME RATE UNTIL SUCH TIME AS THE EMPLOYEE HAS HAD A BREAK OF EIGHT (8) HOURS OR MORE.

U. ALL HOURS WORKED ON SATURDAYS SHALL BE PAID AT ONE AND ONE-HALF TIMES THE HOURLY RATE OF WAGE. ALL HOURS WORKED ON SUNDAYS AND HOLIDAYS (EXCEPT LABOR DAY) SHALL BE PAID AT TWO TIMES THE HOURLY RATE OF WAGE. ALL HOURS WORKED ON LABOR DAY SHALL BE PAID AT THREE TIMES THE HOURLY RATE OF WAGE.

V. ALL HOURS WORKED ON SUNDAYS AND HOLIDAYS (EXCEPT THANKSGIVING DAY AND CHRISTMAS DAY) SHALL BE PAID AT ONE AND ONE-HALF TIMES THE HOURLY RATE OF WAGE. ALL HOURS WORKED ON THANKSGIVING DAY AND CHRISTMAS DAY SHALL BE PAID AT DOUBLE THE HOURLY RATE OF WAGE.

W. ALL HOURS WORKED ON SATURDAYS AND SUNDAYS (EXCEPT MAKE-UP DAYS DUE TO CONDITIONS BEYOND THE CONTROL OF THE EMPLOYER)) SHALL BE PAID AT ONE AND ONE-HALF TIMES THE HOURLY RATE OF WAGE. ALL HOURS WORKED ON HOLIDAYS SHALL BE PAID AT DOUBLE THE HOURLY RATE OF WAGE.

X. THE FIRST FOUR (4) HOURS AFTER EIGHT (8) REGULAR HOURS MONDAY THROUGH FRIDAY AND THE FIRST TWELVE (12) HOURS ON SATURDAY SHALL BE PAID AT ONE AND ONE-HALF TIMES THE HOURLY RATE OF WAGE. ALL HOURS WORKED OVER TWELVE (12) HOURS MONDAY THROUGH SATURDAY, SUNDAYS AND HOLIDAYS SHALL BE PAID AT DOUBLE THE HOURLY RATE OF WAGE. WHEN HOLIDAY FALLS ON SATURDAY OR SUNDAY, THE DAY BEFORE SATURDAY, FRIDAY, AND THE DAY AFTER SUNDAY, MONDAY, SHALL BE CONSIDERED THE HOLIDAY AND ALL WORK PERFORMED SHALL BE PAID AT DOUBLE THE HOURLY RATE OF WAGE.

Y. ALL HOURS WORKED OUTSIDE THE HOURS OF 5:00 AM AND 5:00 PM (OR SUCH OTHER HOURS AS MAY BE AGREED UPON BY ANY EMPLOYER AND THE EMPLOYEE) AND ALL HOURS WORKED IN EXCESS OF EIGHT (8) HOURS PER DAY (10 HOURS PER DAY FOR A 4 X 10 WORKWEEK) AND ON SATURDAYS AND HOLIDAYS (EXCEPT LABOR DAY) SHALL BE PAID AT ONE AND ONE-HALF TIMES THE HOURLY RATE OF WAGE. (EXCEPT FOR EMPLOYEES WHO ARE ABSENT FROM WORK WITHOUT PRIOR APROVAL ON A SCHEDULED WORKDAY DURING THE WORKWEEK SHALL BE PAID AT THE STRAIGHT-TIME RATE UNTIL THEY HAVE WORKED 8 HOURS IN A DAY (10 IN A 4 X 10 WORKWEEK) OR 40 HOURS DURING THAT WORKWEEK.) ALL HOURS WORKED MONDAY THROUGH SATURDAY OVER TWELVE (12) HOURS AND ALL HOURS WORKED ON SUNDAYS AND LABOR DAY SHALL BE PAID AT DOUBLE THE HOURLY RATE OF WAGE.

1. Z ALL HOURS WORKED ON SATURDAYS AND SUNDAYS SHALL BE PAID AT ONE AND ONE-HALF TIMES THE HOURLY RATE OF WAGE. ALL HOURS WORKED ON HOLIDAYS SHALL BE PAID THE STRAIGHT TIME RATE OF PAY IN ADDITION TO HOLIDAY PAY.

2. ALL HOURS WORKED IN EXCESS OF EIGHT (8) HOURS PER DAY OR FORTY (40) HOURS PER WEEK SHALL BE PAID AT ONE AND ONE-HALF TIMES THE HOURLY RATE OF WAGE.

B. ALL HOURS WORKED ON HOLIDAYS SHALL BE PAID AT ONE AND ONE-HALF TIMES THE HOURLY RATE OF WAGE.

C. ALL HOURS WORKED ON SUNDAYS SHALL BE PAID AT ONE AND ONE-HALF TIMES THE HOURLY RATE OF WAGE. ALL HOURS WORKED ON HOLIDAYS SHALL BE PAID AT TWO TIMES THE HOURLY RATE OF WAGE.

F. THE FIRST EIGHT (8) HOURS WORKED ON HOLIDAYS SHALL BE PAID AT THE STRAIGHT HOURLY RATE OF WAGE IN ADDITION TO THE HOLIDAY PAY. ALL HOURS WORKED IN EXCESS OF EIGHT (8) HOURS ON HOLIDAYS SHALL BE PAID AT DOUBLE THE HOURLY RATE OF WAGE.

G. ALL HOURS WORKED ON SUNDAY SHALL BE PAID AT TWO TIMES THE HOURLY RATE OF WAGE. ALL HOURS WORKED ON PAID HOLIDAYS SHALL BE PAID AT TWO AND ONE-HALF TIMES THE HOURLY RATE OF WAGE INCLUDING HOLIDAY PAY.

H. ALL HOURS WORKED ON SUNDAY SHALL BE PAID AT TWO TIMES THE HOURLY RATE OF WAGE. ALL HOURS WORKED ON HOLIDAYS SHALL BE PAID AT ONE AND ONE-HALF TIMES THE HOURLY RATE OF WAGE.

K. ALL HOURS WORKED ON HOLIDAYS SHALL BE PAID AT TWO TIMES THE HOURLY RATE OF WAGE IN ADDITION TO THE HOLIDAY PAY.

O. ALL HOURS WORKED ON SUNDAYS AND HOLIDAYS SHALL BE PAID AT ONE AND ONE-HALF TIMES THE HOURLY RATE OF WAGE.

P. THE FIRST EIGHT (8) HOURS ON SATURDAY SHALL BE PAID AT ONE AND ONE-HALF TIMES THE HOURLY RATE OF WAGE. ALL HOURS WORKED IN EXCESS OF EIGHT 8) HOURS ON SATURDAY AND ALL HOURS WORKED ON SUNDAYS AND HOLIDAYS SHALL BE PAID AT TWO TIMES THE HOURLY RATE OF WAGE.

2. R. ALL HOURS WORKED ON SUNDAYS AND HOLIDAYS AND ALL HOURS WORKED OVER SIXTY (60) IN ONE WEEK SHALL BE PAID AT DOUBLE THE HOURLY RATE OF WAGE.

S. ALL HOURS WORKED ON SATURDAYS SHALL BE PAID AT ONE AND ONE-HALF TIMES THE HOURLY RATE OF WAGE. ALL HOURS WORKED ON SUNDAYS AND HOLIDAYS SHALL BE PAID AT DOUBLE THE HOURLY RATE OF WAGE, EXCEPT THE DAY AFTER THANKSGIVING, THE DAY AFTER CHRISTMAS AND A FLOATING HOLIDAY, WHICH SHALL BE PAID AT THE STRAIGHT TIME RATE IF WORKED, IN ADDITION TO HOLIDAY PAY.

U. ALL HOURS WORKED ON SATURDAYS SHALL BE PAID AT ONE AND ONE-HALF TIMES THE HOURLY RATE OF WAGE. ALL HOURS WORKED OVER 12 HOURS IN A DAY, OR ON SUNDAYS AND HOLIDAYS SHALL BE PAID AT DOUBLE THE HOURLY RATE OF WAGE.

W. THE FIRST TWO (2) HOURS AFTER EIGHT (8) REGULAR HOURS MONDAY THROUGH FRIDAY AND THE FIRST EIGHT (8) HOURS ON SATURDAY SHALL BE PAID AT ONE AND ONE-HALF TIMES THE HOURLY RATE OF WAGE. ALL OTHER HOURS WORKED MONDAY THROUGH SATURDAY, AND ALL HOURS WORKED ON SUNDAYS AND HOLIDAYS SHALL BE PAID AT DOUBLE THE HOURLY RATE OF WAGE. ON A FOUR-DAY, TEN-HOUR WEEKLY SCHEDULE, EITHER MONDAY THRU THURSDAY OR TUESDAY THRU FRIDAY SCHEDULE, ALL HOURS WORKED AFTER TEN SHALL BE PAID AT DOUBLE THE HOURLY RATE OF WAGE. THE FIRST EIGHT (8) HOURS WORKED ON THE FIFTH DAY SHALL BE PAID AT ONE AND ONE-HALF TIMES THE HOURLY RATE OF WAGE. ALL OTHER HOURS WORKED ON THE FIFTH, SIXTH, AND SEVENTH DAYS AND ON HOLIDAYS SHALL BE PAID AT DOUBLE THE HOURLY RATE OF WAGE.

Z. ALL HOURS WORKED MONDAY THROUGH FRIDAY BETWEEN THE HOURS OF 6:00 P.M. AND 6:00 A.M. AND ALL HOURS WORKED ON SATURDAYS SHALL BE PAID AT ONE AND ONE-HALF TIMES THE HOURLY RATE OF WAGE, ***EXCEPT*** FOR COMMERCIAL, OCCUPIED BUILDINGS WHERE FLOOR COVERING WORK CANNOT BE PERFORMED IN THE REGULAR DAYTIME HOURS DUE TO OCCUPANCY. FOR SUCH OCCUPIED, COMMERCIAL BUILDINGS; THE EMPLOYEE MAY AGREE TO WORK BETWEEN THE HOURS OF 6:00 PM TO 6:00 AM MONDAY THROUGH SATURDAY MORNING AT 6:00 AM AT AN OVERTIME PAY RATE OF 10% OVER THE STRAIGHT TIME RATE. ALL HOURS WORKED ON SUNDAYS AND HOLIDAYS SHALL BE PAID AT DOUBLE THE HOURLY RATE OF WAGE.

4. ALL HOURS WORKED IN EXCESS OF EIGHT (8) HOURS PER DAY OR FORTY (40) HOURS PER WEEK SHALL BE PAID AT ONE AND ONE-HALF TIMES THE HOURLY RATE OF WAGE.

A. ALL HOURS WORKED IN EXCESS OF EIGHT (8) HOURS PER DAY OR FORTY (40) HOURS PER WEEK SHALL BE PAID AT DOUBLE THE HOURLY RATE OF WAGE. ALL HOURS WORKED ON SATURDAYS, SUNDAYS AND HOLIDAYS SHALL BE PAID AT DOUBLE THE HOURLY RATE OF WAGE.

B. ALL HOURS WORKED ON SATURDAYS (EXCEPT MAKEUP DAYS IF WORK IS LOST DUE TO INCLEMENT WEATHER CONDITIONS) SHALL BE PAID AT ONE AND ONE-HALF TIMES THE HOURLY RATE OF WAGE. ALL HOURS WORKED MONDAY THROUGH SATURDAY OVER TWELVE (12) HOURS AND ALL HOURS WORKED ON SUNDAYS AND HOLIDAYS SHALL BE PAID AT DOUBLE THE HOURLY RATE OF WAGE.

HOLIDAY CODES

5. A. HOLIDAYS: NEW YEAR'S DAY, MEMORIAL DAY, INDEPENDENCE DAY, LABOR DAY, THANKSGIVING DAY, FRIDAY AFTER THANKSGIVING DAY, AND CHRISTMAS DAY (7).

B. HOLIDAYS: NEW YEAR'S DAY, MEMORIAL DAY, INDEPENDENCE DAY, LABOR DAY, THANKSGIVING DAY, FRIDAY AFTER THANKSGIVING DAY, THE DAY BEFORE CHRISTMAS, AND CHRISTMAS DAY (8).

C. HOLIDAYS: NEW YEAR'S DAY, PRESIDENTS' DAY, MEMORIAL DAY, INDEPENDENCE DAY, LABOR DAY, THANKSGIVING DAY, THE FRIDAY AFTER THANKSGIVING DAY, AND CHRISTMAS DAY (8).

D. HOLIDAYS: NEW YEAR'S DAY, MEMORIAL DAY, INDEPENDENCE DAY, LABOR DAY, THANKSGIVING DAY, THE FRIDAY AND SATURDAY AFTER THANKSGIVING DAY, AND CHRISTMAS DAY (8).

H. HOLIDAYS: NEW YEAR'S DAY, MEMORIAL DAY, INDEPENDENCE DAY, THANKSGIVING DAY, THE DAY AFTER THANKSGIVING DAY, AND CHRISTMAS (6).

I. HOLIDAYS: NEW YEAR'S DAY, MEMORIAL DAY, INDEPENDENCE DAY, LABOR DAY, THANKSGIVING DAY, AND CHRISTMAS DAY (6).

J. HOLIDAYS: NEW YEAR'S DAY, MEMORIAL DAY, INDEPENDENCE DAY, THANKSGIVING DAY, FRIDAY AFTER THANKSGIVING DAY, CHRISTMAS EVE DAY, AND CHRISTMAS DAY (7).

K. HOLIDAYS: NEW YEAR'S DAY, PRESIDENTS' DAY, MEMORIAL DAY, INDEPENDENCE DAY, LABOR DAY, THANKSGIVING DAY, FRIDAY AFTER THANKSGIVING DAY, THE DAY BEFORE CHRISTMAS, AND CHRISTMAS DAY (9).

L. HOLIDAYS: NEW YEAR'S DAY, MARTIN LUTHER KING JR. DAY, MEMORIAL DAY, INDEPENDENCE DAY, LABOR DAY, THANKSGIVING DAY, FRIDAY AFTER THANKSGIVING DAY, AND CHRISTMAS DAY (8)

N. HOLIDAYS: NEW YEAR'S DAY, PRESIDENTS' DAY, MEMORIAL DAY, INDEPENDENCE DAY, LABOR DAY, VETERANS' DAY, THANKSGIVING DAY, THE FRIDAY AFTER THANKSGIVING DAY, AND CHRISTMAS DAY (9).

P. HOLIDAYS: NEW YEAR'S DAY, MEMORIAL DAY, INDEPENDENCE DAY, LABOR DAY, THANKSGIVING DAY, FRIDAY AND SATURDAY AFTER THANKSGIVING DAY, THE DAY BEFORE CHRISTMAS, AND CHRISTMAS DAY (9). IF A HOLIDAY FALLS ON SUNDAY, THE FOLLOWING MONDAY SHALL BE CONSIDERED AS A HOLIDAY.

R. PAID HOLIDAYS: NEW YEAR'S DAY, MEMORIAL DAY, INDEPENDENCE DAY, LABOR DAY, THANKSGIVING DAY, DAY AFTER THANKSGIVING DAY, ONE-HALF DAY BEFORE CHRISTMAS DAY, AND CHRISTMAS DAY. (7 1/2).

5. S. PAID HOLIDAYS: NEW YEAR'S DAY, PRESIDENTS' DAY, MEMORIAL DAY, INDEPENDENCE DAY, LABOR DAY, THANKSGIVING DAY, AND CHRISTMAS DAY (7).

T. PAID HOLIDAYS: NEW YEAR'S DAY, WASHINGTON'S BIRTHDAY, MEMORIAL DAY, INDEPENDENCE DAY, LABOR DAY, THANKSGIVING DAY, THE FRIDAY AFTER THANKSGIVING DAY, CHRISTMAS DAY, AND THE DAY BEFORE OR AFTER CHRISTMAS (9).

V. PAID HOLIDAYS: SIX (6) PAID HOLIDAYS.

Z. HOLIDAYS: NEW YEAR'S DAY, MEMORIAL DAY, INDEPENDENCE DAY, LABOR DAY, VETERANS DAY, THANKSGIVING DAY, THE FRIDAY AFTER THANKSGIVING DAY, AND CHRISTMAS DAY (8).

6. A. PAID HOLIDAYS: NEW YEAR'S DAY, PRESIDENTS' DAY, MEMORIAL DAY, INDEPENDENCE DAY, LABOR DAY, THANKSGIVING DAY, THE FRIDAY AFTER THANKSGIVING DAY, AND CHRISTMAS DAY (8).

E. PAID HOLIDAYS: NEW YEAR'S DAY, DAY BEFORE OR AFTER NEW YEAR'S DAY, PRESIDENTS DAY, MEMORIAL DAY, INDEPENDENCE DAY, LABOR DAY, THANKSGIVING DAY, DAY AFTER THANKSGIVING DAY, CHRISTMAS DAY, AND A HALF-DAY ON CHRISTMAS EVE DAY. (9 1/2).

F. PAID HOLIDAYS: NEW YEAR'S DAY, MARTIN LUTHER KING JR. DAY, PRESIDENTS' DAY, MEMORIAL DAY, INDEPENDENCE DAY, LABOR DAY, VETERANS' DAY, THANKSGIVING DAY, THE DAY AFTER THANKSGIVING DAY, AND CHRISTMAS DAY (11).

G. PAID HOLIDAYS: NEW YEAR'S DAY, MARTIN LUTHER KING JR. DAY, PRESIDENTS' DAY, MEMORIAL DAY, INDEPENDENCE DAY, LABOR DAY, VETERANS' DAY, THANKSGIVING DAY, THE FRIDAY AFTER THANKSGIVING DAY, CHRISTMAS DAY, AND CHRISTMAS EVE DAY (11).

H. PAID HOLIDAYS: NEW YEAR'S DAY, NEW YEAR'S EVE DAY, MEMORIAL DAY, INDEPENDENCE DAY, LABOR DAY, THANKSGIVING DAY, FRIDAY AFTER THANKSGIVING DAY, CHRISTMAS DAY, THE DAY AFTER CHRISTMAS, AND A FLOATING HOLIDAY (10).

I. PAID HOLIDAYS: NEW YEAR'S DAY, MEMORIAL DAY, INDEPENDENCE DAY, LABOR DAY, THANKSGIVING DAY, FRIDAY AFTER THANKSGIVING DAY, AND CHRISTMAS DAY (7).

6. Q. PAID HOLIDAYS: NEW YEAR'S DAY, MEMORIAL DAY, INDEPENDENCE DAY, LABOR DAY, VETERANS DAY, THANKSGIVING DAY, THE DAY AFTER THANKSGIVING DAY AND CHRISTMAS DAY (8). UNPAID HOLIDAY: PRESIDENTS' DAY.

T. PAID HOLIDAYS: NEW YEAR'S DAY, PRESIDENTS' DAY, MEMORIAL DAY, INDEPENDENCE DAY, LABOR DAY, THANKSGIVING DAY, THE FRIDAY AFTER THANKSGIVING DAY, THE LAST WORKING DAY BEFORE CHRISTMAS DAY, AND CHRISTMAS DAY (9).

Z HOLIDAYS: NEW YEAR'S DAY, MEMORIAL DAY, INDEPENDENCE DAY, LABOR DAY, THANKSGIVING DAY, FRIDAY AFTER THANKSGIVING DAY, AND CHRISTMAS DAY (7). IF A HOLIDAY FALLS ON SATURDAY, THE PRECEDING FRIDAY SHALL BE CONSIDERED AS THE HOLIDAY. IF A HOLIDAY FALLS ON SUNDAY, THE FOLLOWING MONDAY SHALL BE CONSIDERED AS THE HOLIDAY.

7. A. HOLIDAYS: NEW YEAR'S DAY, MEMORIAL DAY, INDEPENDENCE DAY, LABOR DAY, THANKSGIVING DAY, THE FRIDAY AND SATURDAY AFTER THANKSGIVING DAY, AND CHRISTMAS DAY (8). ANY HOLIDAY WHICH FALLS ON A SUNDAY SHALL BE OBSERVED AS A HOLIDAY ON THE FOLLOWING MONDAY. IF ANY OF THE LISTED HOLIDAYS FALLS ON A SATURDAY, THE PRECEDING FRIDAY SHALL BE A REGULAR WORK DAY.

B. HOLIDAYS: NEW YEAR'S DAY, MEMORIAL DAY, INDEPENDENCE DAY, LABOR DAY, THANKSGIVING DAY, THE FRIDAY AND SATURDAY AFTER THANKSGIVING DAY, AND CHRISTMAS DAY (8). ANY HOLIDAY WHICH FALLS ON A SUNDAY SHALL BE OBSERVED AS A HOLIDAY ON THE FOLLOWING MONDAY. ANY HOLIDAY WHICH FALLS ON A SATURDAY SHALL BE OBSERVED AS A HOLIDAY ON THE PRECEDING FRIDAY.

C. HOLIDAYS: NEW YEAR'S DAY, MARTIN LUTHER KING JR. DAY, MEMORIAL DAY, INDEPENDENCE DAY, LABOR DAY, THANKSGIVING DAY, THE FRIDAY AFTER THANKSGIVING DAY, AND CHRISTMAS DAY (8). ANY HOLIDAY WHICH FALLS ON A SUNDAY SHALL BE OBSERVED AS A HOLIDAY ON THE FOLLOWING MONDAY. ANY HOLIDAY WHICH FALLS ON A SATURDAY SHALL BE OBSERVED AS A HOLIDAY ON THE PRECEDING FRIDAY.

D. PAID HOLIDAYS: NEW YEAR'S DAY, MEMORIAL DAY, INDEPENDENCE DAY, LABOR DAY, VETERAN'S DAY, THANKSGIVING DAY, THE FRIDAY AFTER THANKSGIVING DAY, AND CHRISTMAS DAY (8). UNPAID HOLIDAYS: PRESIDENT'S DAY. ANY PAID HOLIDAY WHICH FALLS ON A SUNDAY SHALL BE OBSERVED AS A HOLIDAY ON THE FOLLOWING MONDAY. ANY PAID HOLIDAY WHICH FALLS ON A SATURDAY SHALL BE OBSERVED AS A HOLIDAY ON THE PRECEDING FRIDAY.

E. HOLIDAYS: NEW YEAR'S DAY, MEMORIAL DAY, INDEPENDENCE DAY, LABOR DAY, THANKSGIVING DAY, THE FRIDAY AFTER THANKSGIVING DAY, AND CHRISTMAS DAY (7). ANY HOLIDAY WHICH FALLS ON A SUNDAY SHALL BE OBSERVED AS A HOLIDAY ON THE FOLLOWING MONDAY. ANY HOLIDAY WHICH FALLS ON A SATURDAY SHALL BE OBSERVED AS A HOLIDAY ON THE PRECEDING FRIDAY.

F. HOLIDAYS: NEW YEAR'S DAY, MEMORIAL DAY, INDEPENDENCE DAY, LABOR DAY, THANKSGIVING DAY, THE FRIDAY AFTER THANKSGIVING DAY, THE LAST WORKING DAY BEFORE CHRISTMAS DAY AND CHRISTMAS DAY (8). ANY HOLIDAY WHICH FALLS ON A SUNDAY SHALL BE OBSERVED AS A HOLIDAY ON THE FOLLOWING MONDAY. ANY HOLIDAY WHICH FALLS ON A SATURDAY SHALL BE OBSERVED AS A HOLIDAY ON THE PRECEDING FRIDAY.

G. HOLIDAYS: NEW YEAR'S DAY, MEMORIAL DAY, INDEPENDENCE DAY, LABOR DAY, THANKSGIVING DAY, AND CHRISTMAS DAY (6). ANY HOLIDAY WHICH FALLS ON A SUNDAY SHALL BE OBSERVED AS A HOLIDAY ON THE FOLLOWING MONDAY.

H. HOLIDAYS: NEW YEAR'S DAY, MARTIN LUTHER KING JR. DAY, INDEPENDENCE DAY, MEMORIAL DAY, LABOR DAY, THANKSGIVING DAY, THE FRIDAY AFTER THANKSGIVING DAY, THE LAST WORKING DAY BEFORE CHRISTMAS DAY AND CHRISTMAS DAY (9). ANY HOLIDAY WHICH FALLS ON A SUNDAY SHALL BE OBSERVED AS A HOLIDAY ON THE FOLLOWING MONDAY. ANY HOLIDAY WHICH FALLS ON A SATURDAY SHALL BE OBSERVED AS A HOLIDAY ON THE PRECEDING FRIDAY.

I. HOLIDAYS: NEW YEAR'S DAY, PRESIDENT'S DAY, INDEPENDENCE DAY, MEMORIAL DAY, LABOR DAY, THANKSGIVING DAY, THE FRIDAY AFTER THANKSGIVING DAY, THE DAY BEFORE CHRISTMAS DAY AND CHRISTMAS DAY (9). ANY HOLIDAY WHICH FALLS ON A SUNDAY SHALL BE OBSERVED AS A HOLIDAY ON THE FOLLOWING MONDAY. ANY HOLIDAY WHICH FALLS ON A SATURDAY SHALL BE OBSERVED AS A HOLIDAY ON THE PRECEDING FRIDAY.

J. HOLIDAYS: NEW YEAR'S DAY, INDEPENDENCE DAY, MEMORIAL DAY, LABOR DAY, THANKSGIVING DAY AND CHRISTMAS DAY (6). ANY HOLIDAY WHICH FALLS ON A SUNDAY SHALL BE OBSERVED AS A HOLIDAY ON THE FOLLOWING MONDAY. ANY HOLIDAY WHICH FALLS ON A SATURDAY SHALL BE OBSERVED AS A HOLIDAY ON THE PRECEDING FRIDAY.

K. HOLIDAYS: NEW YEAR'S DAY, MEMORIAL DAY, INDEPENDENCE DAY, THANKSGIVING DAY, THE FRIDAY AND SATURDAY AFTER THANKSGIVING DAY, AND CHRISTMAS DAY (8). ANY HOLIDAY WHICH FALLS ON A SUNDAY SHALL BE OBSERVED AS A HOLIDAY ON THE FOLLOWING MONDAY. ANY HOLIDAY WHICH FALLS ON A SATURDAY SHALL BE OBSERVED AS A HOLIDAY ON THE PRECEDING FRIDAY.

L. HOLIDAYS: NEW YEAR'S DAY, MEMORIAL DAY, LABOR DAY, INDEPENDENCE DAY, THANKSGIVING DAY, THE LAST WORK DAY BEFORE CHRISTMAS DAY, AND CHRISTMAS DAY (7). ANY HOLIDAY WHICH FALLS ON A SUNDAY SHALL BE OBSERVED AS A HOLIDAY ON THE FOLLOWING MONDAY. ANY HOLIDAY WHICH FALLS ON A SATURDAY SHALL BE OBSERVED AS A HOLIDAY ON THE PRECEDING FRIDAY.

7.

M. PAID HOLIDAYS: NEW YEAR'S DAY, THE DAY AFTER OR BEFORE NEW YEAR'S DAY, PRESIDENT'S DAY, MEMORIAL DAY, INDEPENDENCE DAY, LABOR DAY, THANKSGIVING DAY, THE FRIDAY AFTER THANKSGIVING DAY, CHRISTMAS DAY, AND THE DAY AFTER OR BEFORE CHRISTMAS DAY. 10). ANY HOLIDAY WHICH FALLS ON A SUNDAY SHALL BE OBSERVED AS A HOLIDAY ON THE FOLLOWING MONDAY. ANY HOLIDAY WHICH FALLS ON A SATURDAY SHALL BE OBSERVED AS A HOLIDAY ON THE PRECEDING FRIDAY.

N. HOLIDAYS: NEW YEAR'S DAY, MEMORIAL DAY, INDEPENDENCE DAY, LABOR DAY, THANKSGIVING DAY, THE FRIDAY AFTER THANKSGIVING DAY, AND CHRISTMAS DAY (7). ANY HOLIDAY WHICH FALLS ON A SUNDAY SHALL BE OBSERVED AS A HOLIDAY ON THE FOLLOWING MONDAY. WHEN CHRISTMAS FALLS ON A SATURDAY, THE PRECEDING FRIDAY SHALL BE OBSERVED AS A HOLIDAY.

O. PAID HOLIDAYS: NEW YEAR'S DAY, THE DAY AFTER OR BEFORE NEW YEAR'S DAY, PRESIDENT'S DAY, MEMORIAL DAY, INDEPENDENCE DAY, LABOR DAY, THANKSGIVING DAY, THE FRIDAY AFTER THANKSGIVING DAY, CHRISTMAS DAY, THE DAY AFTER OR BEFORE CHRISTMAS DAY, AND THE EMPLOYEES BIRTHDAY. 11). ANY HOLIDAY WHICH FALLS ON A SUNDAY SHALL BE OBSERVED AS A HOLIDAY ON THE FOLLOWING MONDAY. ANY HOLIDAY WHICH FALLS ON A SATURDAY SHALL BE OBSERVED AS A HOLIDAY ON THE PRECEDING FRIDAY.

P. HOLIDAYS: NEW YEAR'S DAY, MEMORIAL DAY, INDEPENDENCE DAY, LABOR DAY, THANKSGIVING DAY, FRIDAY AFTER THANKSGIVING DAY, AND CHRISTMAS DAY (7). ANY HOLIDAY WHICH FALLS ON A SUNDAY SHALL BE OBSERVED AS A HOLIDAY ON THE FOLLOWING MONDAY.

Q. HOLIDAYS: NEW YEAR'S DAY, MEMORIAL DAY, INDEPENDENCE DAY, LABOR DAY, THANKSGIVING DAY, THE FRIDAY AFTER THANKSGIVING DAY, THE LAST WORKING DAY BEFORE CHRISTMAS DAY AND CHRISTMAS DAY (8). ANY HOLIDAY WHICH FALLS ON A SUNDAY SHALL BE OBSERVED AS A HOLIDAY ON THE FOLLOWING MONDAY. IF ANY OF THE LISTED HOLIDAYS FALLS ON A SATURDAY, THE PRECEDING FRIDAY SHALL BE A REGULAR WORK DAY.

NOTE CODES

8. A. IN ADDITION TO THE HOURLY WAGE AND FRINGE BENEFITS, THE FOLLOWING DEPTH PREMIUMS APPLY TO DEPTHS OF FIFTY FEET OR MORE:
   OVER 50' TO 100' - $2.00 PER FOOT FOR EACH FOOT OVER 50 FEET
   OVER 100' TO 150' - $3.00 PER FOOT FOR EACH FOOT OVER 100 FEET
   OVER 150' TO 220' - $4.00 PER FOOT FOR EACH FOOT OVER 150 FEET
   OVER 220' - $5.00 PER FOOT FOR EACH FOOT OVER 220 FEET

   C. IN ADDITION TO THE HOURLY WAGE AND FRINGE BENEFITS, THE FOLLOWING DEPTH PREMIUMS APPLY TO DEPTHS OF FIFTY FEET OR MORE:
   OVER 50' TO 100' - $1.00 PER FOOT FOR EACH FOOT OVER 50 FEET
   OVER 100' TO 150' - $1.50 PER FOOT FOR EACH FOOT OVER 100 FEET
   OVER 150' TO 200' - $2.00 PER FOOT FOR EACH FOOT OVER 150 FEET
   OVER 200' - DIVERS MAY NAME THEIR OWN PRICE

   D. WORKERS WORKING WITH SUPPLIED AIR ON HAZMAT PROJECTS RECEIVE AN ADDITIONAL $1.00 PER HOUR.

   L. WORKERS ON HAZMAT PROJECTS RECEIVE ADDITIONAL HOURLY PREMIUMS AS FOLLOWS - LEVEL A: $0.75, LEVEL B: $0.50, AND LEVEL C: $0.25.

   M. WORKERS ON HAZMAT PROJECTS RECEIVE ADDITIONAL HOURLY PREMIUMS AS FOLLOWS: LEVELS A & B: $1.00, LEVELS C & D: $0.50.

   N. WORKERS ON HAZMAT PROJECTS RECEIVE ADDITIONAL HOURLY PREMIUMS AS FOLLOWS - LEVEL A: $1.00, LEVEL B: $0.75, LEVEL C: $0.50, AND LEVEL D: $0.25

8. P. WORKERS ON HAZMAT PROJECTS RECEIVE ADDITIONAL HOURLY PREMIUMS AS FOLLOWS - CLASS A SUIT: $2.00, CLASS B SUIT: $1.50, CLASS C SUIT: $1.00, AND CLASS D SUIT $0.50.

   Q. THE HIGHEST PRESSURE REGISTERED ON THE GAUGE FOR AN ACCUMULATED TIME OF MORE THAN FIFTEEN (15) MINUTES DURING THE SHIFT SHALL BE USED IN DETERMINING THE SCALE PAID.

Department of Labor and Industries
Prevailing Wage
(360) 902-5335
www.lni.wa.gov/TradesLicensing/PrevWage

STATEMENT OF INTENT TO PAY PREVAILING WAGES

Public Works Contract
$40.00 Filing Fee Required

- This form **must** be typed or printed in ink.
- **Fill in all blanks or the form will be returned for correction (see instructions).**
- Please allow a **minimum** of 10 working days for processing.
- Once approved, your form will be posted online at https://fortress.wa.gov/lni/pwiapub/SearchFor.asp

Intent ID # (Assigned by L&I)_____

Your Company Information		
Your Company Name ABC Company, Inc.		
Your Address 1234 Main Street		
City Olympia	State WA	Zip+4 98501-1234
Your Contractor Registration Number ABCCI*0123AA	Your UBI Number 123456789	
Your Industrial Insurance Account Number 111,111-11		
Your Email Address (required for notification of approval) prevailingwage@lni.wa.gov	Your Phone Number (555) 555-5555	

Awarding Agency Information		
Project Name Road Repair	Contract Number 2011-01B	
Awarding Agency WA State Department of Transportation		
Awarding Agency Address PO Box 47354		
City Olympia	State WA	Zip+4 98501
Awarding Agency Contact Name John Doe	Phone Number (555) 555-5555	
County Where Work Will Be Performed Thurston	City Where Work Will Be Performed Olympia	

Additional Details	
Your Expected Job Start Date (mm/dd/yyyy) 01/01/2011	
Job Site Address/Directions State Street @ Plum Street	

Contract Details	
Bid Due Date (**Prime Contractor's**) 08/01/2010	Award Date (**Prime Contractor's**) 08/10/2010
Indicate Total Dollar Amount of **Your** Contract (including sales tax) or time and materials, if applicable.	$1000.00

ARRA Funds	**Weatherization or Energy Efficient Funds**
Does this project utilize American Recovery and Reinvestment Act (ARRA) funds? ☐ Yes ☒ No	Does this project utilize any weatherization or energy efficiency upgrade funds (ARRA or otherwise)? ☐ Yes ☒ No

Prime Contractor's Company Information		**Hiring Contractor's Company Information**	
Prime Contractor's Company Name XYZ Company, Inc.	Prime Contractor's Intent Number 123456	Hiring Contractor's Company Name Super Pavers, Inc.	
Prime Contractor's Registration Number XYZIN*0123AA	Prime Contractor's UBI Number 987654321	Hiring Contractor's Contractor Registration Number SUPERPA123AA	Hiring Contractor's UBI Number 321456987

Employment Information

Do you intend to use **ANY** subcontractors?	☐ Yes	☒ No	Will employees perform work on this project?	☒ Yes	☐ No
Will **ALL** work be subcontracted?	☐ Yes	☒ No	Do you intend to use apprentice employees?	☒ Yes	☐ No

Number of Owner/Operators who own at least 30% of the company who will perform work on the project: ☐ None (0) ☒ One (1) ☐ Two (2) ☐ Three (3)

Crafts/Trades/Occupations – (Do not list apprentices. They are listed on the Affidavit of Wages Paid only.) If an employee works in more than one trade, ensure that all hours worked in each trade are reported below. For additional crafts/trades/occupations please use Addendum A.	**Number of Workers**	**Rate of Hourly Pay**	**Rate of Hourly Usual ("Fringe") Benefits**
Laborer - Asphalt Raker	**2**	**39.28**	**5.00**
Power Equipment Operator - Asphalt Plant Operator	**1**	**48.04**	**2.35**
Truck Driver - Asphalt Mix (over 16 Yds)	**1**	**46.47**	**0.00**

Signature Block

I hereby certify that I have read and understand the instructions to complete this form and that the information, including any addenda, are correct and that all workers I employ on this Public Works Project will be paid no less than the Prevailing Wage Rate(s) as determined by the Industrial Statistician of the Department of Labor and Industries.

Print Name:	**Print Title:**	**Signature:**	**Date:**

For L&I Use Only

Approved by signature of the Department of Labor and Industries Industrial Statistician

NOTICE: If the prime contract is at a cost of over one million dollars ($1,000,000.00), RCW 39.04.370 requires you to complete the EHB 2805 (RCW 39.04.370) Addendum and attach it to your Affidavit of Wages of Paid when your work on the project concludes. This is only a notice. The EHB 2805 Addendum is not submitted with this Intent.

SAMPLE

INSTRUCTIONS TO COMPLETE THE
STATEMENT OF INTENT OT PAY PREVAILING WAGES

Starting in the upper right hand corner of the form:

***Required Fields**

***Project Name:** This is the name given to the prime contractor by the awarding agency.
***Contract #:** This is the number of the contract assigned by the awarding agency to the prime contractor.
***Contract Awarding Agency:** This is the name of the public agency that awarded the contract.
Address, City, State, ZIP +4: This is the address of the contract awarding agency.
Awarding Agency Project Contact Person & Phone #: This is the contact at the awarding agency for this project.
***Approved form will be mailed to this address:** You need to find out where the form should be mailed from the Prime Contractor or the Awarding agency.
***County where work will be performed:** This is the county in which the actual work was performed.
City where work will be performed: This is the city in which the work was performed. If the work was performed outside the limits of any city, write "N/A" in this space
***Bid Due Date:** This the date that the prime contractor turned in their bid to the awarding agency. (month/day/year)
***Date Contract Awarded** – This is the date the contract was awarded to the prime contractor by the awarding agency. (month/day/year)
***Prime Contractor, Contractor Registration #, UBI#, and Phone #:** These are all the prime's information and need to be listed on the form. **Please note: this may not be the contractor who hired you – this is the general contractor who has the contract with the awarding agency.**
***Number of Owner/Operators that Performed Work on the Project that Own 30% or More of the Company:** Only list them if they performed work – if there were none then put zero.
***Will Employees Perform Work on this Project:** Need to circle yes or no. If yes then you need to list the trades and occupations otherwise, if no, then you do not have to put anything.
***Will all Work be Subcontracted:** If all work was performed by subcontractors, check the appropriate box.
***Do you intend to use subcontractors:** If part of the work was performed by subcontractors, check the appropriate box.
***Expected Job Start Date:** This is the date that you begin work on the project.
***Do you intend to use apprentices:** Please note that apprentices are considered employees.
***Craft/trade occupation** – List each craft/trade/occupation of workers employed on this project. If this is residential, landscape, or underground sewer and water construction, please state so on the form. If operating engineers and/or truck drivers were used, describe the type, and list the size or rated capacity of the equipment. If you indicated owners/partners in the question above and you also indicated no employees then just put N/A in this section. (Individuals who own less than 30% of the company are not considered to be owners/operators, and must be paid prevailing wage.)
***Estimated Number of Workers:** List the number of journey-level workers employed for each craft/trade/occupation on this project. This cannot be a range (i.e. 1-2 or 2-4, etc.)
***Rate of Hourly Pay:** Enter the rate of hourly pay for each craft/trade/occupation. Enter the rate of hourly pay as defined by RCW 39.12.010, that you actually provided to the workers. The amount listed for "Rate of Hourly Pay" plus the amount listed for the "Rate of Hourly Fringe Benefits", if any, must equal or exceed the Prevailing Wage rate.
***Rate of Hourly Fringe Benefits:** Enter the rate of hourly fringe benefits. This is the cost of fringe benefits, as defined by RCW 39.12.010, that you actually paid to the workers. The amount listed for "Rate of Hourly Pay" plus the amount listed for "Rate of Hourly Fringe Benefits", if any, must equal or exceed the prevailing rate of wage.
***Indicate total dollar amount of your contract or time and materials if applicable:** Time and material is allowed on the Statement of Intent of Pay Prevailing Wages but will not be on the Affidavit to Pay Prevailing Wages.
***Company Name:** Indicate your company's name, address, phone number, and the signature of an authorized company representative with date signed. (Contractor registration number begins with the first letters of company name).

If there is not enough space to list all required information on one form, use additional Intent forms as needed. Please indicate at the top of each form "Page 1 of 2", "Page 2 of 2", etc. No additional fee is required. No other attachments will be accepted.

Approval of this Intent will be based on the information provided by the contractor/subcontractor. It does not signify approval of the classifications of labor used by the contractor/subcontractor.

L&I will mail the approved white copy of this Intent to the organization provided on the front of this form. Make a copy for your records.

Prevailing wage rates are available on the Internet at http://www.lni.wa.gov/TradesLicensing/PrevWage

Please submit both copies (white and canary) and the $40 filing fee to:

Management Services
Dept. of Labor and Industries
PO Box 44835
Olympia, WA 98504-4835
(360) 902-5335

Department of Labor and Industries
Prevailing Wage Program
(360) 902-5335
www.lni.wa.gov/TradesLicensing/PrevWage

AFFIDAVIT OF WAGES PAID

Public Works Contract
$40.00 Filing Fee Required

- This form **must** be typed or printed in ink.
- **Fill in ALL blanks or the form will be returned for correction (see instructions).**
- Please allow a **minimum** of 10 working days for processing.
- Once approved, your form will be posted online at https://fortress.wa.gov/lni/pwiapub/SearchFor.asp

Affidavit ID # (Assigned by L&I):

SAMPLE

Your Company Information		
Your Company Name: ABC Company		
Your Address: 1234 Main Street		
City: Olympia	State: WA	Zip+4: 98501-1234
Your Contractor Registration Number: ABCCI*0123AA	Your UBI Number: 123456789	
Your Industrial Insurance Account Number: 111,111-11		
Your Email Address (required for notification of approval): prevailingwage@lni.wa.gov	Your Phone Number: (555) 555-5555	

Awarding Agency Information		
Project Name: Road Repair	Contract Number: 123-456	
Awarding Agency: WA St Department of Transportation		
Awarding Agency Address: PO Box 123		
City: Olympia	State: WA	Zip+4: 98501
Awarding Agency Contact Name: John Doe	Phone Number: (555) 555-5555	
County Where Work Was Performed: Thurston	City Where Work Was Performed: Olympia	

Additional Details	
Your Job Start Date (mm/dd/yyyy): 2/1/2011	**Your** Date Work Completed (mm/dd/yyyy): 3/1/2011
Job Site Address/Directions: Plum and State Street	Your Approved Intent ID #: 123456

Contract Details	
Bid Due Date (**Prime Contractor's**): 1/1/2011	Award Date (**Prime Contractor's**): 1/5/2011
Indicate Total Dollar Amount of **Your** Contract (including sales tax).	$10,000.00

EHB 2805 (RCW 39.04.370) – Is the Prime Contractor's Contract at a cost of over one million dollars ($1,000,000)? ☐ Yes ☒ No

If you answered "Yes" to the **EHB 2805** question and the Award Date is **9/1/2010** or later you must complete and submit the **EHB 2805 (RCW 39.04.370) Addendum**.

ARRA Funds

Does this project utilize American Recovery and Reinvestment Act (ARRA) funds? ☐ Yes ☒ No

Weatherization or Energy Efficient Funds

Does this project utilize any weatherization or energy efficiency upgrade funds (ARRA or otherwise)? ☐ Yes ☒ No

Prime Contractor's Company Information	
Prime Contractor's Company Name: XYZ Company	
Prime Contractor's Registration Number: XYZCI*0123AA	Prime Contractor's UBI Number: 987654321

Hiring Contractor's Company Information	
Hiring Contractor's Company Name: CBA Company	
Hiring Contractor's Registration Number: CBACI*0123AA	Hiring Contractor's UBI Number: 456789123

Employment Information

Did you use **ANY** subcontractors?	☐ Yes (**Addendum B Required**)	☒ No	Did employees perform work on this project?	☒ Yes	☐ No
Was **ALL** work subcontracted?	☐ Yes (**Addendum B Required**)	☒ No	Did you use apprentice employees?	☐ Yes	☒ No

Number of Owner/Operators who own at least 30% of the company who performed work on this project: ☐ None (0) ☒ One (1) ☐ Two (2) ☐ Three (3)

You must list the First and Last Name(s) of any Owner/Operator performing work below

List your Crafts/Trades/Occupations Below - For Journey Level Workers you must provide all of the information below. Owner/Operators - must provide their First and Last name no other information required. ****Apprentices are not recorded below. You must use Addendum D to list Apprentices.**	**Number of Workers**	**Total # of Hours Worked**	**Rate of Hourly Pay**	**Rate of Hourly Usual ("Fringe") Benefits**
General Labor	2	153	41.23	8.54
Carpenter	5	210	52.26	10.13

Signature Block

I hereby certify that I have read and understand the instructions to complete this form and that the information on the form and any addenda is correct and that all workers I employed on this Public Works Project were paid no less than the Prevailing Wage Rate(s) as determined by the Industrial Statistician of the Department of Labor and Industries.

Print Name: Jane Doe **Print Title:** Bookkeeper **Signature:** **Date:** 3/5/2011

For L&I Use Only

APPROVED: Department of Labor and Industries

By _____ Industrial Statistician

SAMPLE

INSTRUCTIONS TO COMPLETE THE AFFIDAVIT OF WAGES PAID

Starting in the upper right hand corner of the form:

***Required Fields**

***Project Name:** This is the name given to the prime contractor by the awarding agency.
***Contract #:** This is the number of the contract assigned by the awarding agency to the prime contractor.
***Contract Awarding Agency:** This is the name of the public agency that awarded the contract.
Address, City, State, ZIP +4: This is the address of the contract awarding agency.
Awarding Agency Project Contact Person & Phone #: This is the contact at the awarding agency for this project.
***Approved form will be mailed to this address:** You need to find out where the form should be mailed from the Prime Contractor or the Awarding agency.
***County where work was performed:** This is the county in which the actual work was performed.
City where work was performed: This is the city in which the work was performed. If the work was performed outside the limits of any city, write "N/A" in this space
***Bid Due Date:** This the date that the prime contractor turned in their bid to the awarding agency. (month/day/year)
***Date Contract Awarded** – This is the date the contract was awarded to the prime contractor by the awarding agency. (month/day/year)
***Prime Contractor, Contractor Registration #, UBI#, and Phone #:** These are all the prime's information and need to be listed on the form. **Please note: this may not be the contractor who hired you – this is the general contractor who has the contract with the awarding agency.**
***Date Work Completed:** This is the date you completed work on the project. You cannot have a date in the future.
***Date Intent Filed:** This is the date you filed your intent with the Department. An affidavit cannot be approved without the Statement of Intent to Pay Prevailing Wages being filed.
***Intent ID #:** This can be found at the top of the form and is five numbers long.
***Number of Owner/Operators that Performed Work on the Project that Own 30% or More of the Company:** Only list them if they performed work – if there were none then put zero.
***Did Employees Perform Work on this Project:** Need to circle yes or no. If yes then you need to list the trades and occupations otherwise, if no, then you do not have to put anything.
***Was all Work Subcontracted?:** If all work was performed by subcontractors, check the appropriate box.
***Did you use subcontractors?:** If part of the work was performed by subcontractors, check the appropriate box.
***Job Start Date:** This is the date that you begin work on the project.
***Craft/trade occupation** – List each craft/trade/occupation of workers employed on this project. If this is residential, landscape, or underground sewer and water construction, please state so on the form. If operating engineers and/or truck drivers were used, describe the type, and list the size or rated capacity of the equipment. If you indicated owners/partners in the question above and you also indicated no employees then you do not need to fill in this section. (Individuals who own less than 30% of the company are not considered to be owners/operators, and must be paid prevailing wage.) Use Attachment A for additional occupations that will not fit on this form.
***Number of Workers:** List the number of journey-level workers employed for each craft/trade/occupation on this project.
***Total Number of Hours Worked:** List the total number of hours worked for each craft/trade/occupation.
***Rate of Hourly Pay:** Enter the rate of hourly pay for each craft/trade/occupation. Enter the rate of hourly pay as defined by RCW 39.12.010, that you actually provided to the workers. The amount listed for "Rate of Hourly Pay" plus the amount listed for the "Rate of Hourly Fringe Benefits", if any, must equal or exceed the Prevailing Wage rate.
***Rate of Hourly Fringe Benefits:** Enter the rate of hourly fringe benefits. This is the cost of fringe benefits, as defined by RCW 39.12.010, that you actually paid to the workers. The amount listed for "Rate of Hourly Pay" plus the amount listed for "Rate of Hourly Fringe Benefits", if any, must equal or exceed the prevailing rate of wage.
Apprentices: If apprentices were employed on this project, list each by name, registration number, craft, stage of progression, beginning and ending dates of work performed on this project, and rate of hourly pay and fringe benefits. Any workers not registered with the Washington State Apprenticeship and Training Council must be paid prevailing journeyman wages. Any apprentice not registered with the Washington State Apprenticeship and Training Council within 60 days of hiring must be paid prevailing journeyman wages for the time preceding the date of registration. To verify apprenticeship registration and status, call (360) 902-5324.
***Indicate total dollar amount of your contract:** Including sales tax **(No Time & Material allowed)**
***Company Name:** Indicate your company's name, address, phone number, and the signature of an authorized company representative with date signed. (Contractor registration number begins with the first letters of company name).

If there is not enough space to list all required information on one form, use additional Intent forms as needed. Please indicate at the top of each form "Page 1 of 2", "Page 2 of 2", etc. No additional fee is required. No other attachments will be accepted.

Approval of this Affidavit will be based on the information provided by the contractor/subcontractor. It does not signify approval of the classifications of labor used by the contractor/subcontractor.

L&I will mail the approved white copy of this Affidavit to the organization provided on the front of this form. Make a copy for your records.

Prevailing wage rates are available on the Internet at http://www.lni.wa.gov/TradesLicensing/PrevWage

Please submit both copies (white and canary) and the $40 filing fee to:

Management Services
Dept. of Labor and Industries
PO Box 44835
Olympia, WA 98504-4835
(360) 902-5335

STANDARD PLANS

DRAWN BY: LISA CYFORD

NOTES

1. Size the Below Inlet Grate Device (BIGD) for the storm water structure it will service.
2. The BIGD shall have a built-in high-flow relief system (overflow bypass).
3. The retrieval system must allow removal of the BIGD without spilling the collected material.
4. Perform maintenance in accordance with Standard Specification 8-01.3(15).

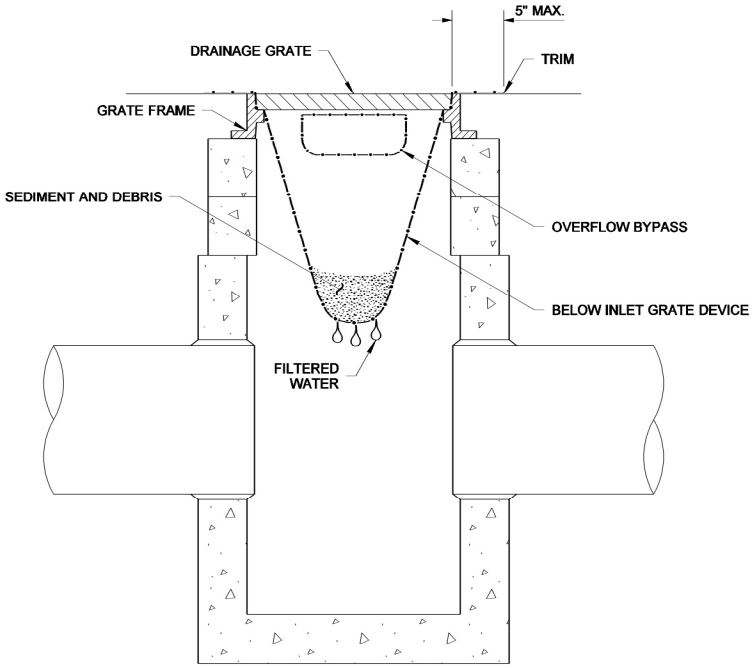

SECTION VIEW

NOT TO SCALE

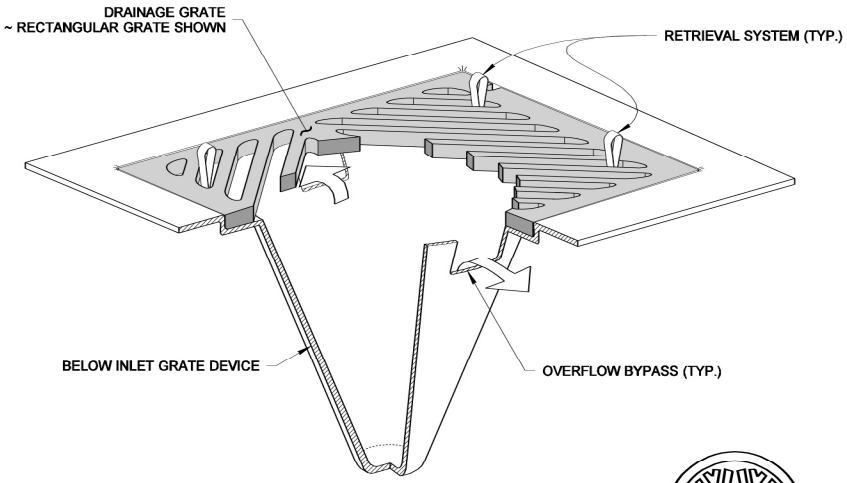

ISOMETRIC VIEW

STATE OF WASHINGTON REGISTERED LANDSCAPE ARCHITECT

MARK W. MAURER

CERTIFICATE NO. 000598

NOTE: THIS PLAN IS NOT A LEGAL ENGINEERING DOCUMENT BUT AN ELECTRONIC DUPLICATE. THE ORIGINAL, SIGNED BY THE ENGINEER AND APPROVED FOR PUBLICATION, IS KEPT ON FILE AT THE WASHINGTON STATE DEPARTMENT OF TRANSPORTATION. A COPY MAY BE OBTAINED UPON REQUEST.

STORM DRAIN INLET PROTECTION

STANDARD PLAN I-40.20-00

SHEET 1 OF 1 SHEET

APPROVED FOR PUBLICATION

Pasco Bakotich III — STATE DESIGN ENGINEER

09-20-07 — DATE

Washington State Department of Transportation

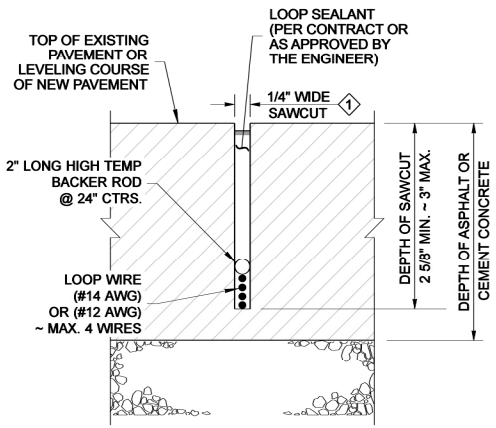

SECTION A

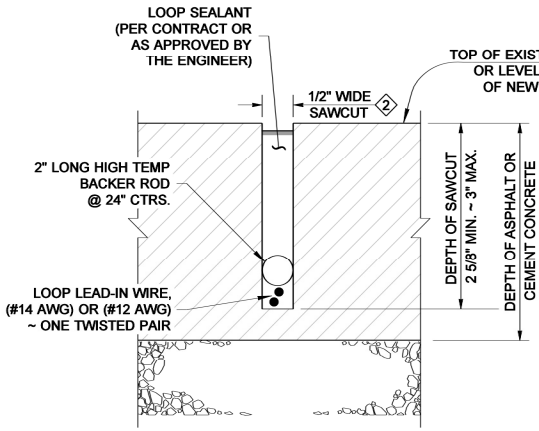

SECTION B

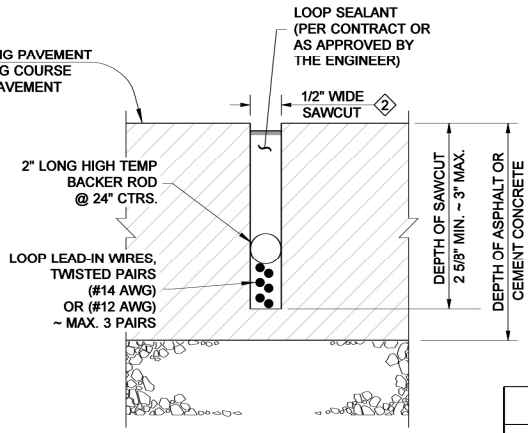

SECTION C

NOTES

1. Fill the conduit trench to the bottom of the existing or new surfacing with CSTC, sand or controlled density fill. See **Standard Specifications Section 2-09.3(1)E**.
2. Minor Regional variations are allowed in the soft pocket closure. Consult with the Engineer or see the Contract for additional requirements.
3. Conductors shall be snug to the bottom of the sawcut. High temperature backer rod shall be snug to the conductors and sides of cut.
4. Fill the sealant to within 1/8" to 3/16" from top of saw cut.
5. See **Standard Plan J-40.10** for additional Junction Box details.

PVC CONDUIT SIZING TABLE					
LOOP LEAD PAIRS	1 - 4	5 - 10	11 - 16	17 - 22	23 - 28
NUMBER AND SIZE OF CONDUITS	1 - 2"	2 - 2"	3 - 2"	4 - 2"	3 - 3"

1 ADD 1/16" TO THE SAWCUT FOR IMSA 51 - 7 CONDUCTORS

2 ADD 1/8" TO THE SAWCUT FOR IMSA 51 - 7 CONDUCTORS

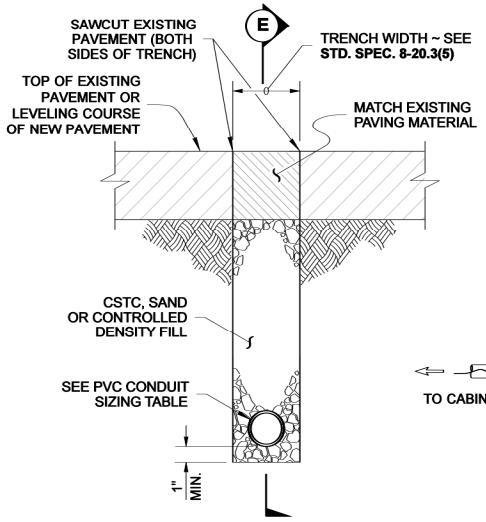

SECTION D

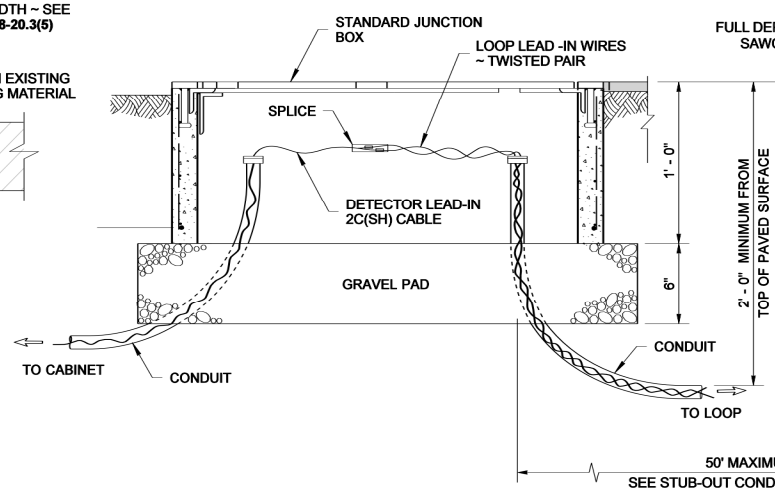

JUNCTION BOX PLACEMENT

SEE NOTE 5

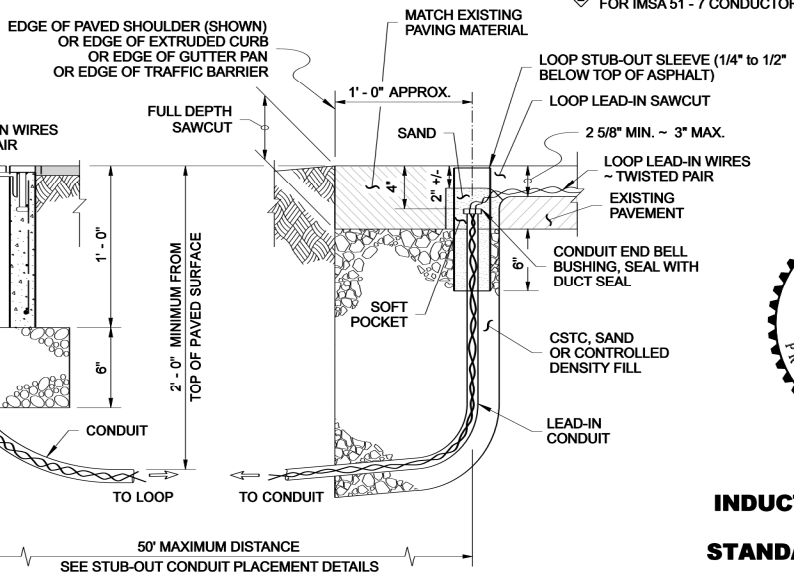

LEAD-IN CONDUIT SECTION

MAX. 50 FT POCKET SECTION

SECTION E

NOTE: THIS PLAN IS NOT A LEGAL ENGINEERING DOCUMENT BUT AN ELECTRONIC DUPLICATE. THE ORIGINAL, SIGNED BY THE ENGINEER AND APPROVED FOR PUBLICATION, IS KEPT ON FILE AT THE WASHINGTON STATE DEPARTMENT OF TRANSPORTATION. A COPY MAY BE OBTAINED UPON REQUEST.

INDUCTION LOOP DETAILS

STANDARD PLAN J-50.15-00

SHEET 1 OF 3 SHEETS

APPROVED FOR PUBLICATION

Pasco Bakotich III — STATE DESIGN ENGINEER

06-03-11 — DATE

Washington State Department of Transportation

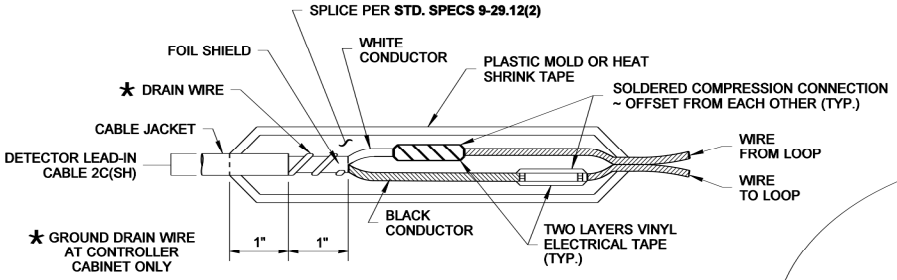

SPLICE DETAIL

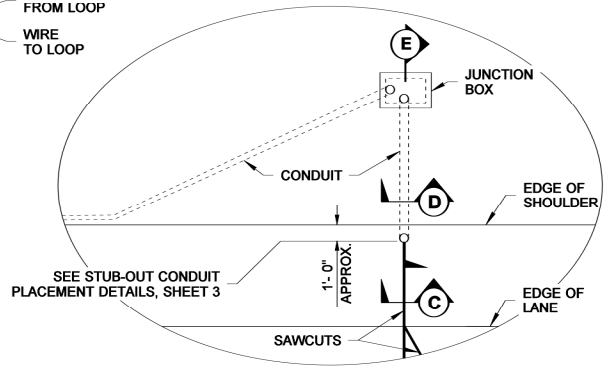

DETAIL "A"

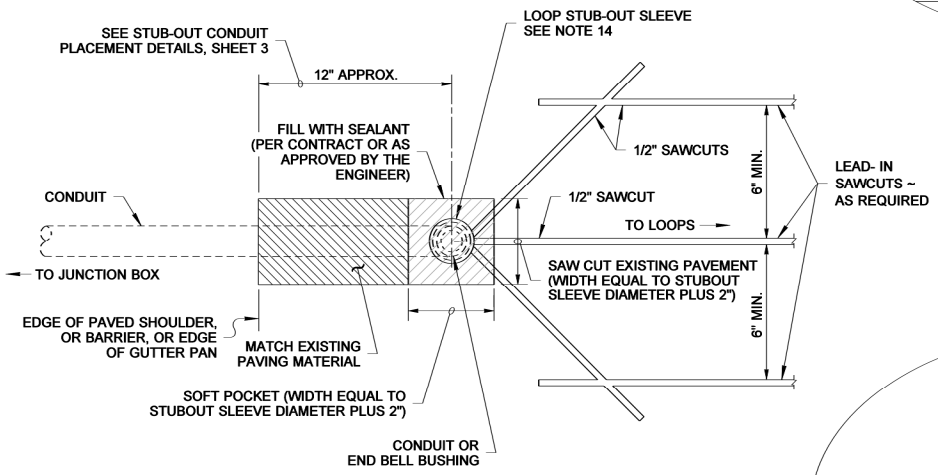

PLAN

SAWCUT AND CONDUIT CONNECTION

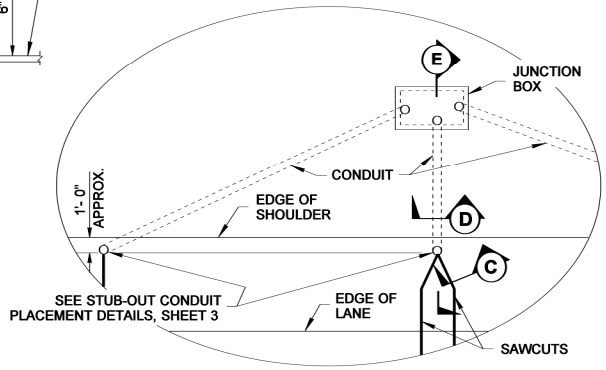

DETAIL "B"

LOOP INSTALLATION NOTES

1. Install the Junction Box and the stub-out conduit with PVC sleeve. Conduit for the loop stub-out shall be as required in the conduit size table shown on sheet 1 of this set.
2. Lay out loops and loop lead-ins to miss cracks/joints in road, when possible. Maintain 18" minimum clearance from manholes and valve boxes.
3. The opening around the loop stub shall be patched with matching paving material if opened larger than PVC sleeve + 2".
4. Sawcut the loop slots and the lead-in slots. Wash/dry cuts. File edges to remove burr of all saw-cuts into stub out sleeve.
5. Lay out the loop wire starting at the Junction Box, allowing 5' minimum slack.
6. Install the wire in the loop slot as shown.
7. Finish laying out the wire at the Junction Box and identify the leads with the loop number, the "S" for start and the "F" for the finish, the loop series number, and the loop lead-in conductor number.
8. Twist each pair of the lead-in wires a minimum of two times per foot each foot, from the loop to the Junction Box. Reverse the direction of the twist for each successive pair installed. Seal loops/sawcuts.
9. Construct a supplemental splice containing any series loop connections in the adjacent junction box as required in the plans. Supplemental splices are subject to the same requirements shown for the loop lead-in and the shielded cable splice.
10. Splice the loop lead-ins to the shielded cable as noted in the Contract.
11. All loop circuits shall be tested per **Standard Specifications 8-20.3(14)D** once installation is complete.
12. Existing stubouts shall be upgraded as necessary to conform to the conduit size table shown on sheet 1.
13. All loop lead-in sawcuts parallel to lane edge shall be at least 12" from edge of pavement and within six inches outside of lane or fog line when possible. Maintain 12" separation between parallel cuts or joints.
14. The loop stub-out sleeve shall have an inside diameter 1" larger than the outside diameter of the End Bell Bushing. Plug conduit and fill sleeve with sand untill loops are installed to keep out Hot Asphalt during paving operations.

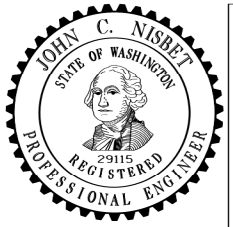

NOTE: THIS PLAN IS NOT A LEGAL ENGINEERING DOCUMENT BUT AN ELECTRONIC DUPLICATE. THE ORIGINAL, SIGNED BY THE ENGINEER AND APPROVED FOR PUBLICATION, IS KEPT ON FILE AT THE WASHINGTON STATE DEPARTMENT OF TRANSPORTATION. A COPY MAY BE OBTAINED UPON REQUEST.

INDUCTION LOOP DETAILS

STANDARD PLAN J-50.15-00

SHEET 2 OF 3 SHEETS

APPROVED FOR PUBLICATION

Pasco Bakotich III — STATE DESIGN ENGINEER

06-03-11 — DATE

Washington State Department of Transportation

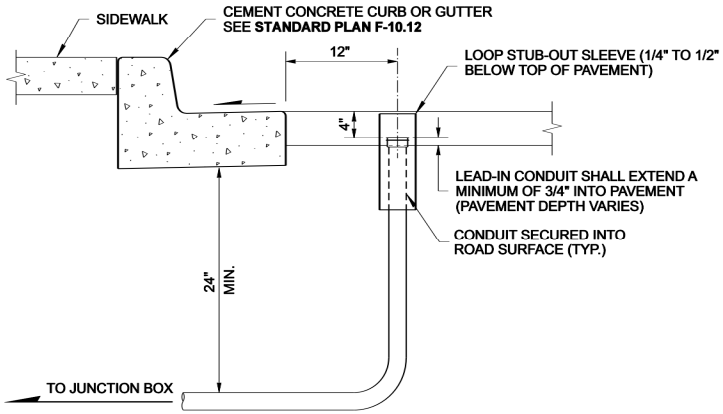

STUB-OUT DETAIL
WITH CEMENT CONCRETE CURB OR GUTTER

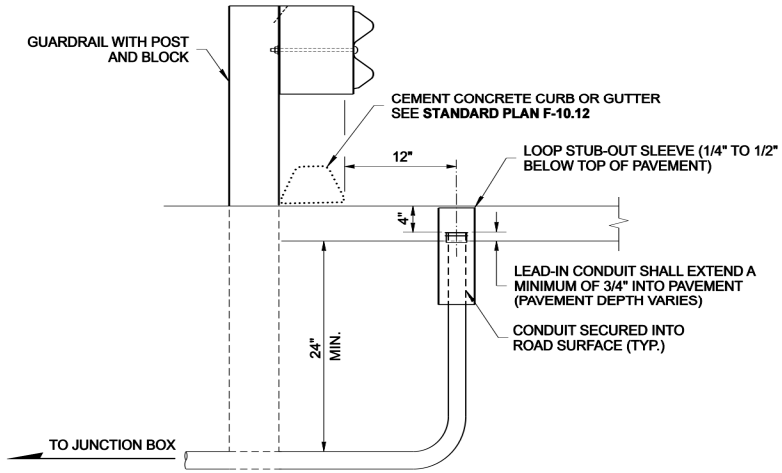

STUB-OUT DETAIL
WITH GUARDRAIL AND CURB

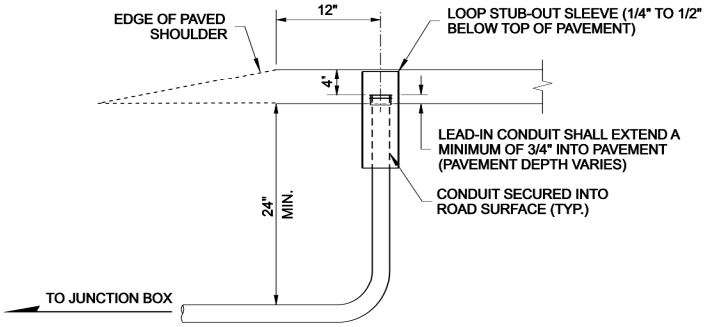

STUB-OUT DETAIL
WITH ROADWAY

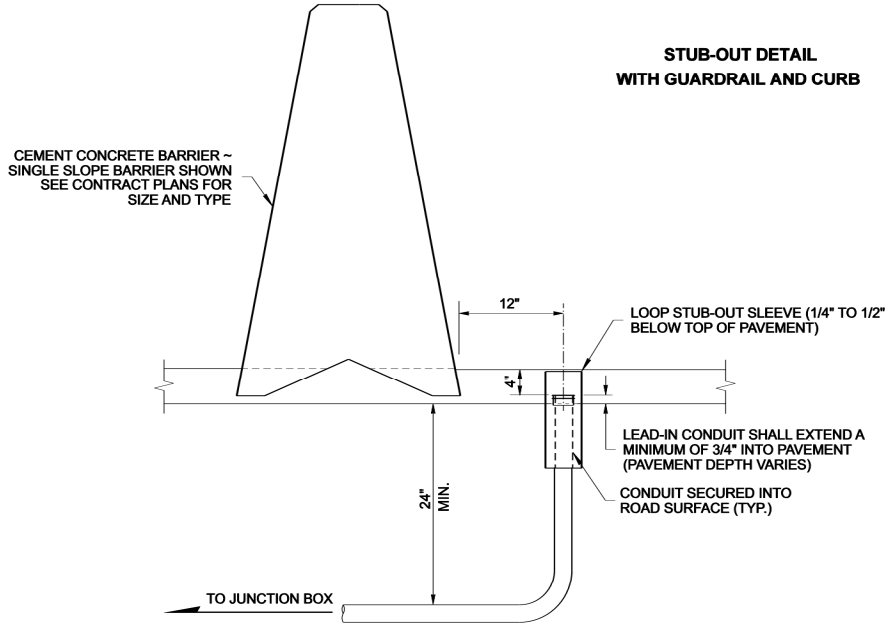

STUB-OUT DETAIL WITH
CEMENT CONCRETE BARRIER

STUBOUT CONDUIT PLACEMENT DETAILS

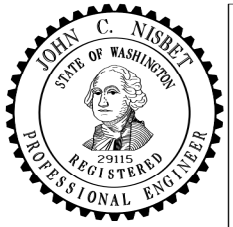

NOTE: THIS PLAN IS NOT A LEGAL ENGINEERING DOCUMENT BUT AN ELECTRONIC DUPLICATE. THE ORIGINAL, SIGNED BY THE ENGINEER AND APPROVED FOR PUBLICATION, IS KEPT ON FILE AT THE WASHINGTON STATE DEPARTMENT OF TRANSPORTATION. A COPY MAY BE OBTAINED UPON REQUEST.

INDUCTION LOOP DETAILS

STANDARD PLAN J-50.15-00

SHEET 3 OF 3 SHEETS

APPROVED FOR PUBLICATION

Pasco Bakotich III — STATE DESIGN ENGINEER
06-03-11 — DATE

Washington State Department of Transportation

DRAWN BY: FERN LIDDELL

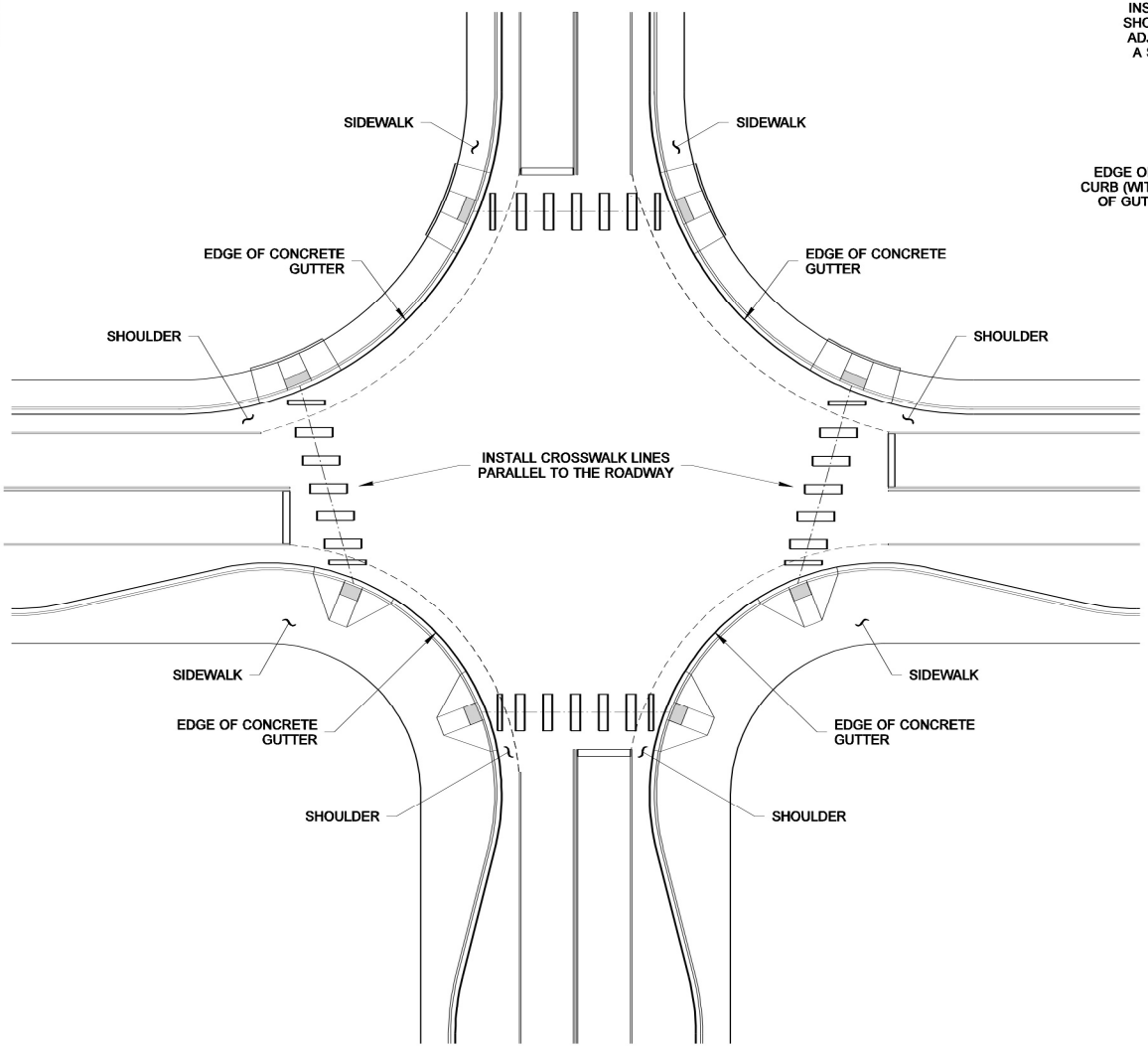

TYPICAL APPLICATIONS

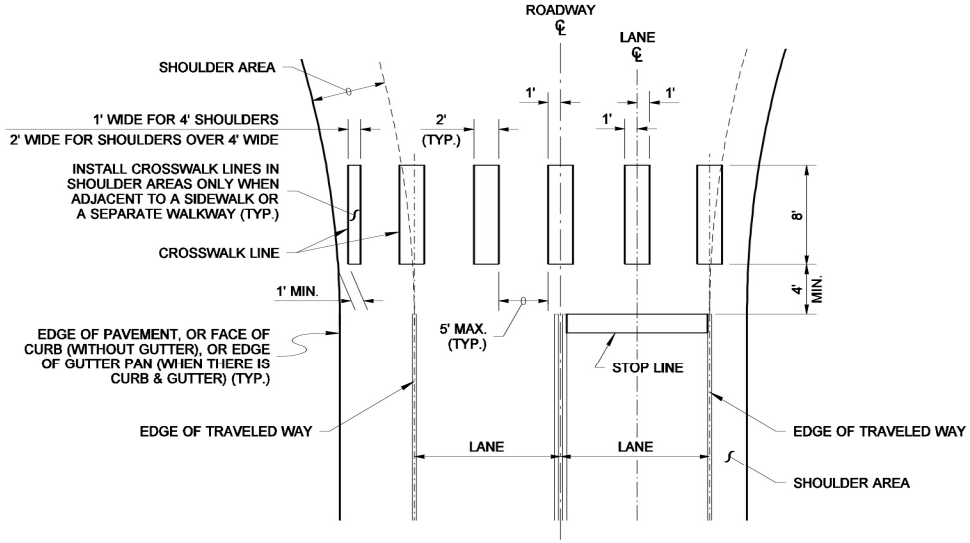

DETAIL

NOTES

1. See the Contract Plans for locations of crosswalk centerlines.
2. To the maximum extent possible, curb ramp centerline should be perpendicular to the crosswalk centerline.
3. To the maximum extent possible, crosswalks should be perpendicular to the centerline of the traveled way.

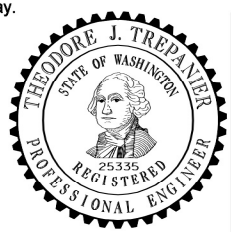

EXPIRES AUGUST 9, 2007

NOTE: THIS PLAN IS NOT A LEGAL ENGINEERING DOCUMENT BUT AN ELECTRONIC DUPLICATE. THE ORIGINAL, SIGNED BY THE ENGINEER AND APPROVED FOR PUBLICATION, IS KEPT ON FILE AT THE WASHINGTON STATE DEPARTMENT OF TRANSPORTATION. A COPY MAY BE OBTAINED UPON REQUEST.

CROSSWALK LAYOUT

STANDARD PLAN M-15.10-01

SHEET 1 OF 1 SHEET

APPROVED FOR PUBLICATION

Ken L. Smith — STATE DESIGN ENGINEER

02-06-07 — DATE

Washington State Department of Transportation

DRAWN BY: LISA CYFORD

CENTERLINE & LANE LINE

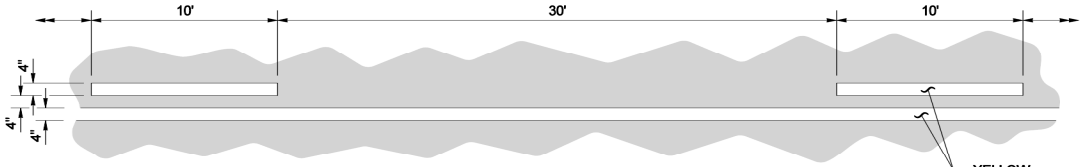

NO-PASS LINE & TWO-WAY LEFT-TURN CENTERLINE

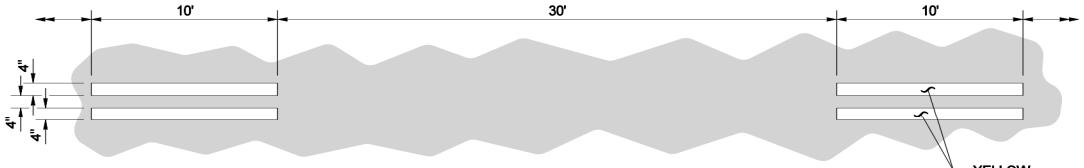

REVERSIBLE LANE LINE

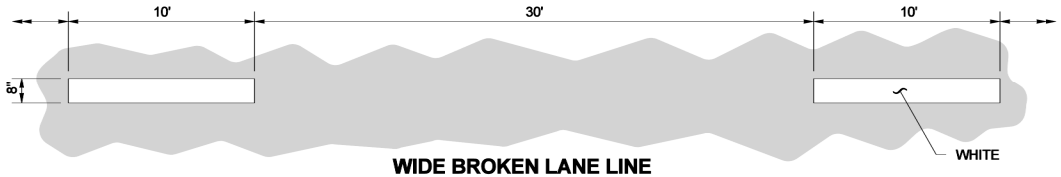

WIDE BROKEN LANE LINE

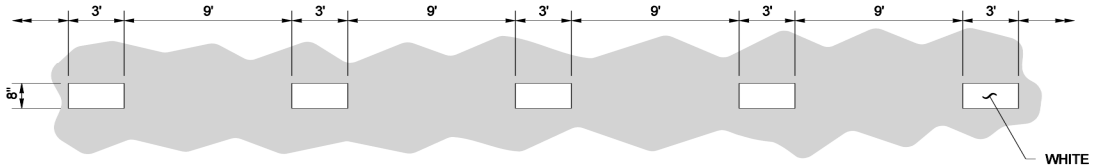

WIDE DOTTED LANE LINE

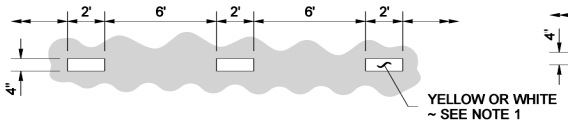

DOTTED EXTENSION LINE

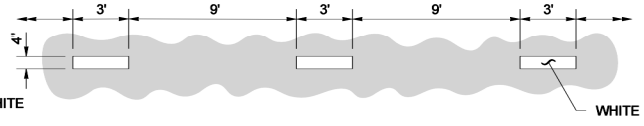

DOTTED LANE LINE

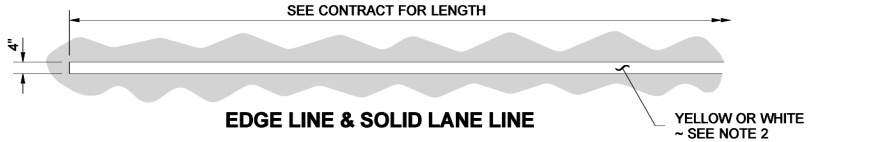

EDGE LINE & SOLID LANE LINE

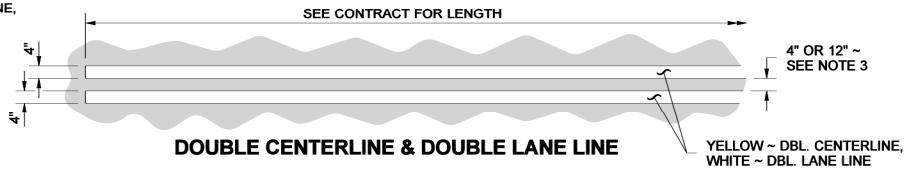

DOUBLE CENTERLINE & DOUBLE LANE LINE

WIDE LANE LINE

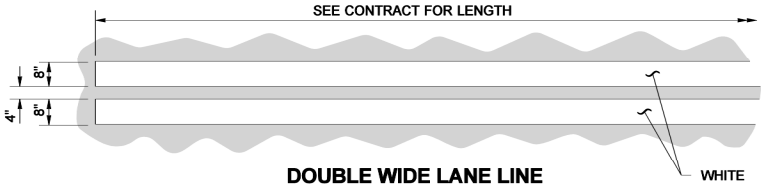

DOUBLE WIDE LANE LINE

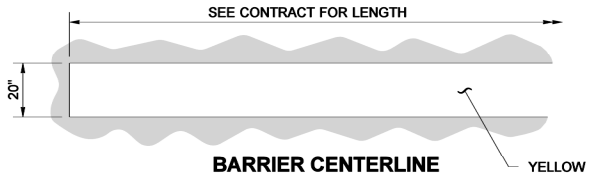

BARRIER CENTERLINE

NOTES

1. Dotted Extension Line shall be the same color as the line it is extending.
2. Edge Line shall be white on the right edge of traveled way, and yellow on the left edge of traveled way (on one-way roadways). Solid Lane Line shall be white.
3. The distance between the lines of the Double Centerline shall be 12" everywhere, except 4" for left-turn channelization and narrow roadways with lane widths of 10 feet or less. Local Agencies (on non-state routes) may specify a 4" distance for all locations.

   The distance between the lines of the Double Lane Line shall be 4".

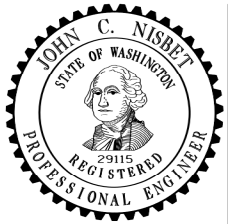

NOTE: THIS PLAN IS NOT A LEGAL ENGINEERING DOCUMENT BUT AN ELECTRONIC DUPLICATE. THE ORIGINAL, SIGNED BY THE ENGINEER AND APPROVED FOR PUBLICATION, IS KEPT ON FILE AT THE WASHINGTON STATE DEPARTMENT OF TRANSPORTATION. A COPY MAY BE OBTAINED UPON REQUEST.

LONGITUDINAL MARKING PATTERNS

STANDARD PLAN M-20.10-02

SHEET 1 OF 1 SHEET

APPROVED FOR PUBLICATION

Pasco Bakotich III — STATE DESIGN ENGINEER

06-03-11 — DATE

Washington State Department of Transportation

PROJECT PLANS

CITY OF FIFE
70TH AVE SIGNAL MODIFICATIONS

PROJECT VICINITY MAP

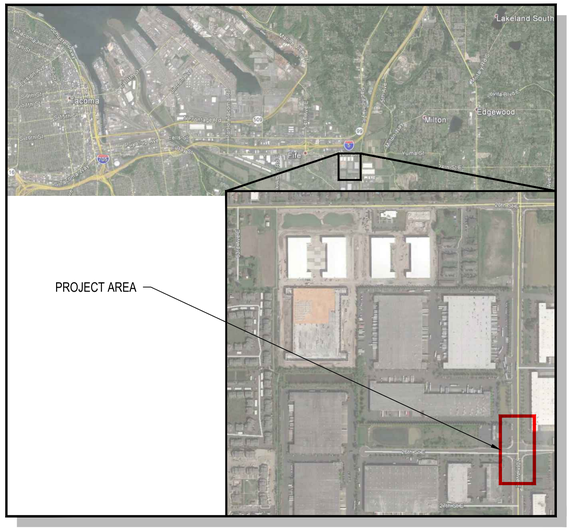

SURVEY NOTES

HORIZONTAL DATUM: NORTH AMERICAN DATUM 1983/1991 WASHINGTON STATE PLANE COORDINATE SYSTEM, SOUTH ZONE.

VERTICAL DATUM: NGVD 1929 DATUM

CALL 48 HOURS BEFORE YOU DIG
ONE CALL 811

REPORT ALL SPILLS
DEPT. OF ECOLOGY 1-800-258-5990

GEOFFREY G. DILLARD — STATE OF WASHINGTON — 31196 — REGISTERED PROFESSIONAL ENGINEER
SIGNED: 09/15/16

ERIK R. HOWE — STATE OF WASHINGTON — 41072 — REGISTERED PROFESSIONAL ENGINEER
SIGNED: 09/15/16

RH2 ENGINEERS PLANNERS SCIENTISTS

LEGEND

EXISTING LEGEND

- MAG NAIL CONTROL POINT
- FIRE HYDRANT (2 PORT)
- WATER GATE VALVE
- WATER METER
- WATER FLOW OFF VALVE
- STANDPIPE
- STORM DRAIN MANHOLE
- CATCH BASIN (ROUND)
- CATCH BASIN (RECTANGULAR)
- CULVERT DAYLIGHT
- SANITARY SEWER MANHOLE
- SANITARY SEWER CLEANOUT
- IRRIGATION VALVE
- SPRINKLER HEAD
- TELEPHONE POLE
- POWER POLE
- PAD MOUNTED TRANSFORMER
- POWER JUNCTION BOX
- POWER METER
- POWER MANHOLE
- POWER VAULT
- CABLE VAULT
- TELEPHONE VAULT
- NATURAL GAS VALVE
- STREET LIGHT ASSEMBLY
- SINGLE POST SIGN
- RIP RAP
- TREE (CONIFER)
- TREE (DECIDUOUS)
- BOLLARD
- FENCE GATE POST
- TV — UNDERGROUND CABLE
- T — UNDERGROUND TELEPHONE
- G — NATURAL GAS
- P — UNDERGROUND POWER
- OHP — OVERHEAD POWER
- SS — SANITARY SEWER
- STORM DRAIN CULVERT
- ST — STORM DRAIN LINE
- W — WATER LINE
- WATER SERVICE LINE
- EASEMENT
- PROPOSED EASEMENT
- UTILITY EASEMENT
- PROPERTY LINE
- RIGHT OF WAY CENTERLINE
- BUILDING EDGE
- PARKING LOT CURB
- ROADWAY CURB
- FENCE
- TOPO FLOWLINE
- TOE — TOPO TOE OF SLOPE
- TOP — TOPO TOP OF SLOPE
- EDGE OF STORM POND
- ROAD STRIPING

PROPOSED LEGEND

STRIPING LEGEND

- PAINTED EDGE LINE
- PAINTED SKIP CENTERLINE
- PLASTIC TYPE 2SL/2SR ARROW
- SIGN

DRAWING INDEX

SHEET NO.	DRAWING NAME	DWG NO.
1	COVER	COV
2	GENERAL NOTES	G01
3	TRAFFIC SIGNAL PLAN	S01
4	SIGNAL DETAILS 1	S02
5	SIGNAL DETAILS 2	S03
6	SIGNAL DETAILS 3	S04
7	70TH AVE E ROADWAY PREPARATION	S05
8	ROADWAY DELINEATION 1	S06
9	ROADWAY DELINEATION 2	S07
10	TRAFFIC CONTROL PLAN 1	TC1
11	TRAFFIC CONTROL PLAN 2	TC2
12	WORK ZONE TRAFFIC CONTROL - CLASS A SIGN PLAN	WZ1

SUBSURFACE UTILITY LEGEND

THE CLASSIFICATIONS FOR SUBSURFACE UTILITIES ARE OUTLINED AND EXPLAINED IN THE FOLLOWING LIST:

UTILITY QUALITY LEVEL A. POTHOLE LOCATION — W — W — W — : - PRECISE HORIZONTAL AND VERTICAL LOCATION OF UTILITIES OBTAINED BY THE ACTUAL EXPOSURE OF (OR VERIFICATION OF PREVIOUSLY EXPOSED AND SURVEYED UTILITIES) AND SUBSEQUENT MEASUREMENT OF SUBSURFACE UTILITIES, USUALLY AT A SPECIFIC POINT. UNLESS OTHERWISE NOTED, QUALITY LEVEL A IS ONLY APPLICABLE AT POTHOLED LOCATIONS ON THE PLANS. AT ALL OTHER AREAS, THE UTILITY SHOULD BE ASSUMED TO BE QUALITY LEVEL B.

UTILITY QUALITY LEVEL B. — W — W — W — : - INFORMATION OBTAINED THROUGH THE APPLICATION OF APPROPRIATE SURFACE GEOPHYSICAL METHODS TO DETERMINE THE EXISTENCE AND APPROXIMATE HORIZONTAL POSITION OF SUBSURFACE UTILITIES.

UTILITY QUALITY LEVEL C. — W — W — : - INFORMATION OBTAINED BY SURVEYING AND PLOTTING VISIBLE ABOVE-GROUND UTILITY FEATURES

UTILITY QUALITY LEVEL D. — • • • W • • • • W • • • • W — : - INFORMATION DERIVED FROM EXISTING RECORDS OR ORAL RECOLLECTIONS

NOTE: THE USE OF THE LINE TYPES PROVIDED ABOVE WAS A PRIMARY METHOD FOR INDICATING THE ACCURACY OF THE UTILITIES SHOWN WITHIN THESE PLANS. WHEN THE SOURCE OF THE INFORMATION WAS UNKNOWN OR THE METHOD FOR LOCATING THE UTILITIES WAS UNAVAILABLE, QUALITY LEVEL D WAS USED AS THE DEFAULT.

SECTION AND DETAIL REFERENCES

THE FOLLOWING CONVENTIONS HAVE BEEN USED WITHIN THESE DRAWINGS TO REFER THE READER BETWEEN THE SECTION/DETAIL AND THE PLAN FROM WHICH IT IS REFERENCED.

REFERENCE BUBBLES

X / X000 — PLAN REFERENCE BUBBLE - REFERS READER BACK TO THE PLAN FROM WHICH THE DETAIL OR SECTION ORIGINATED.

X / X000 — DETAIL/SECTION REFERENCE BUBBLE - REFERS READER TO THE DRAWING ON WHICH THE DETAIL OR SECTION IS LOCATED.

WHERE, ID = SECTION/DETAIL REFERENCE NUMBER
= DRAWING NUMBER ON WHICH DETAIL ORIGINATED OR RESIDES.

SECTION/DETAIL REFERENCE NUMBER CONVENTIONS:
SECTIONS OR ELEVATIONS SHOULD HAVE A LETTER REFERENCE NUMBER (A THROUGH ZZ).

ABBREVIATIONS

CB	CATCH BASIN	N	NORTHING
CONC	CONCRETE	PE	POLYETHYLENE
CL	CENTERLINE	PROP	PROPOSED
CPEP	CORRUGATED POLYETHYLENE	PVC	POLYVINYL CHLORIDE
CSBC	CRUSHED SURFACING BASE COURSE	R	RIGHT
CSTC	CRUSHED SURFACING TOP COURSE	RT	RIGHT
DIAM	DIAMETER	ROW	RIGHT-OF-WAY
DI	DUCTILE IRON	SPEC	SPECIFICATIONS
DWG	DRAWING	SS	SANITARY SEWER
E	EASTING	SSMH	SANITARY SEWER MANHOLE
ELEV	ELEVATION	ST	STORM
EOP	EDGE OF PAVEMENT	STA	STATION LINE
EX	EXISTING	STD	STANDARD
HMA	HOT MIXED ASPHALT	SY	SQUARE YARDS
L	LEFT	TYP	TYPICAL
LT	LEFT	W	WATER
LF	LINEAR FEET		

CONTACT PERSONNEL

CONTACT	AGENCY	PHONE
ERIK HOWE, P.E. (PROJECT MANAGER)	RH2 ENGINEERING	(509) 886-6761
OLGA MARTYUSHEVA (STAFF ENGINEER)	RH2 ENGINEERING	(509) 886-6775
KEN GILL, P.E.	CITY OF FIFE, CITY ENGINEER	(253) 896-8208
XXX	AT & T BROADBAND	
AARON CANTRELL	COMCAST COMMUNICATIONS	(206) 510-4222
DARIUS SPARKS	CENTURY LINK	(206) 733-8866
BRENDA JOLIN	PUGET SOUND ENERGY	(253) 841-6244
BOB TAYLOR	PUGET SOUND ENERGY, GAS	(425) 466-8377
XXX	TACOMA/FIFE FIRE DEPT	(253) 591-5712
XXX	TACOMA POWER	(253) 502-8277
XXX	QWEST COMMUNICATIONS	
CITY OF FIFE UTILITIES		(253) 922-9315
GARY HAMMER	CITY OF FIFE, ELECTRICAL & SIGNALS	
KEN GREEN	CITY OF FIFE, SEWER	
SCOTT NYBERG	CITY OF FIFE, STORMWATER	
AARON JONES	CITY OF FIFE, STREET	
ART GREGG	CITY OF FIFE, WATER	

Sep. 15, 2016
66TH-P-COV-SIGNAL.DWG

SUMMARY OF QUANTITIES

ITEM NO.	SPEC. REF.	TOTAL QTY	UNIT	ITEM
				TAX SCHEDULE - SEE SPECIFICATION SECTION 1-07.2(1)
				PREPARATION
1	1-09.7	1	LS	MOBILIZATION
2	2-02.5	1	LS	REMOVAL OF STRUCTURES AND OBSTRUCTION
				EROSION CONTROL AND PLANTING
3	1-09.6	1	LS	EROSION/WATER POLLUTION CONTROL
				TRAFFIC
4	8-22.5	692	LF	PAINT LINE
5	8-22.5	8	EA	PLASTIC TRAFFIC ARROW
6	8-22.5	171	LF	PLASTIC STOP LINE
7	8-22.5	200	LF	PLASTIC WIDE LANE LINE
8	1-10.5(1)	1	LS	PROJECT TEMPORARY TRAFFIC CONTROL
9	8-21.5	1	LS	PERMANENT SIGNING
10	8-20.5	1	LS	TRAFFIC SIGNAL SYSTEM
				OTHER ITEMS
11	1-05.4	1	LS	ROADWAY SURVEYING
12	7-08.5	1	LS	SHORING OR EXTRA EXCAVATION CLASS B
13	1-09.6	10000	DOL	UNKNOWN UTILITY REPAIR
14	1-09.6	5000	DOL	ROADSIDE CLEANUP
15	1-07.15(1)	1	LS	SPCC PLAN

GENERAL NOTES

1. ALL WORKMANSHIP, CONSTRUCTION AND MATERIALS SHALL BE PERFORMED OR SUPPLIED IN ACCORDANCE WITH THESE SPECIAL PROVISIONS, PLANS, CITY OF FIFE STANDARD DETAILS, AND THE WSDOT STANDARD SPECIFICATIONS FOR ROAD, BRIDGE, AND MUNICIPAL CONSTRUCTION, 2016 EDITION, AS ISSUED BY THE WASHINGTON STATE DEPARTMENT OF TRANSPORTATION AND THE AMERICAN PUBLIC WORKS ASSOCIATION, WHICH IS HEREINAFTER REFERRED TO AS THE STANDARD SPECIFICATIONS.
2. A PRECONSTRUCTION CONFERENCE IS REQUIRED PRIOR TO CONSTRUCTION, AND 48 HOURS ADVANCE NOTIFICATION PRIOR TO ACTUAL START OF WORK IS REQUIRED.
3. THE EXISTING TOPOGRAPHIC AND PHYSICAL FEATURES SHOWN ON THESE PLANS ARE BASED ON A FIELD SURVEY BY PRIZM SURVEYING INC., RECORD DRAWINGS, AND FIELD RECONNAISSANCE BY RH2 ENGINEERING.
4. THE LOCATIONS AND ELEVATIONS OF EXISTING UNDERGROUND UTILITIES SHOWN ON THE PLANS ARE APPROXIMATE. THE CONTRACTOR SHALL DETERMINE THE EXACT LOCATION OF ALL EXISTING UTILITIES PRIOR TO COMMENCING WORK TO AVOID DAMAGE OR DISTURBANCE, AND AGREES TO BE FULLY RESPONSIBLE FOR ANY AND ALL DAMAGES WHICH MIGHT BE CAUSED BY THE CONTRACTOR'S FAILURE TO EXACTLY LOCATE AND PRESERVE ALL UNDERGROUND UTILITIES. IT IS UNDERSTOOD THAT OTHER ABOVE GROUND AND UNDERGROUND FACILITIES NOT SHOWN ON THE PLANS MAY BE ENCOUNTERED DURING THE COURSE OF THE WORK.
5. THE CONTRACTOR SHALL PROTECT BUILDINGS, FENCES, APPURTENANCES, ABOVE GROUND UTILITIES, AND OTHER PROPERTY ADJACENT TO ALL CONSTRUCTION AREAS. THE CONTRACTOR SHALL BE SOLELY RESPONSIBLE FOR REPAIRING ALL DAMAGE CAUSED BY CONSTRUCTION ACTIVITIES.
6. IN ACCORDANCE WITH THE DEPARTMENT OF ECOLOGY AIR QUALITY STANDARDS, THE CONTRACTOR SHALL BE RESPONSIBLE FOR CONTROLLING ALL FUGITIVE DUST THAT MAY BE GENERATED BY THE CONSTRUCTION PROJECT.
7. THE CONTRACTOR SHALL CONTAIN WORK TO WITHIN RIGHT-OF-WAY OR THE CONSTRUCTION LIMITS AS ILLUSTRATED IN THE PLANS.
8. THE CONTRACTOR SHALL SECURE NECESSARY PERMITS PRIOR TO STARTING CONSTRUCTION. THE CITY OF FIFE WILL OBTAIN SOME OF THE REQUIRED PERMITS. SEE SPECIAL PROVISIONS FOR FURTHER INFORMATION REGARDING PERMITS.
9. ONSITE EROSION CONTROL MEASURES SHALL BE THE RESPONSIBILITY OF THE CONTRACTOR AND BE IN PLACE PRIOR TO CONSTRUCTION. ANY PROBLEMS OCCURRING BEFORE FINAL ACCEPTANCE BY THE CITY OF FIFE SHALL BE CORRECTED BY THE CONTRACTOR. UPON FINAL ACCEPTANCE BY THE CITY OF FIFE, OR AS OTHERWISE DIRECTED BY THE ENGINEER, THE CONTRACTOR SHALL REMOVE ALL TEMPORARY, NON-DEGRADABLE EROSION CONTROL MEASURES.
10. ANY REVISIONS TO PLANS MUST BE MADE BY THE ENGINEER AND APPROVED BY THE CITY OF FIFE PRIOR TO ANY IMPLEMENTATION IN THE FIELD.
11. ALL PAVEMENT MARKINGS AND SIGNING SHALL CONFORM TO THE REQUIREMENTS OF THE MUTCD.
12. A COPY OF THE APPROVED PLANS MUST BE ON THE JOB SITE WHENEVER CONSTRUCTION IS IN PROGRESS.

SIGNED: 09/15/16

SIGNED: 09/15/16

RH2 ENGINEERS PLANNERS SCIENTISTS
RH2 ENGINEERING, INC.
www.rh2.com
TACOMA, WA 1.800.720.8052
930 Pacific Avenue, Suite 1220

CITY OF FIFE
70TH SIGNAL MODIFICATIONS

GENERAL NOTES

ENGINEER: OAM
REVIEWED: ERH
SAVE DATE: Sep 15, 2016
PLOT DATE: Sep 19, 2016
CLIENT: FIFE
FILENAME: 66TH-P-COV-SIGNAL.DWG
JOB NO.: 515-108

REVISIONS

NO.	DATE	DESCRIPTION	BY	REVIEW

SCALE: SHOWN
0" 1" 2"
DRAWING IS FULL SCALE WHEN BAR MEASURES 2"

DWG NO.: G01
SHEET NO.: 2 / 12

SIGNAL LEGEND

- EXISTING SIGNAL EQUIPMENT
- 1 EXISTING/UNMODIFIED CONDUIT
- NEW/MODIFIED SIGNAL EQUIPMENT
- 18 NEW AND/OR MODIFIED CONDUIT

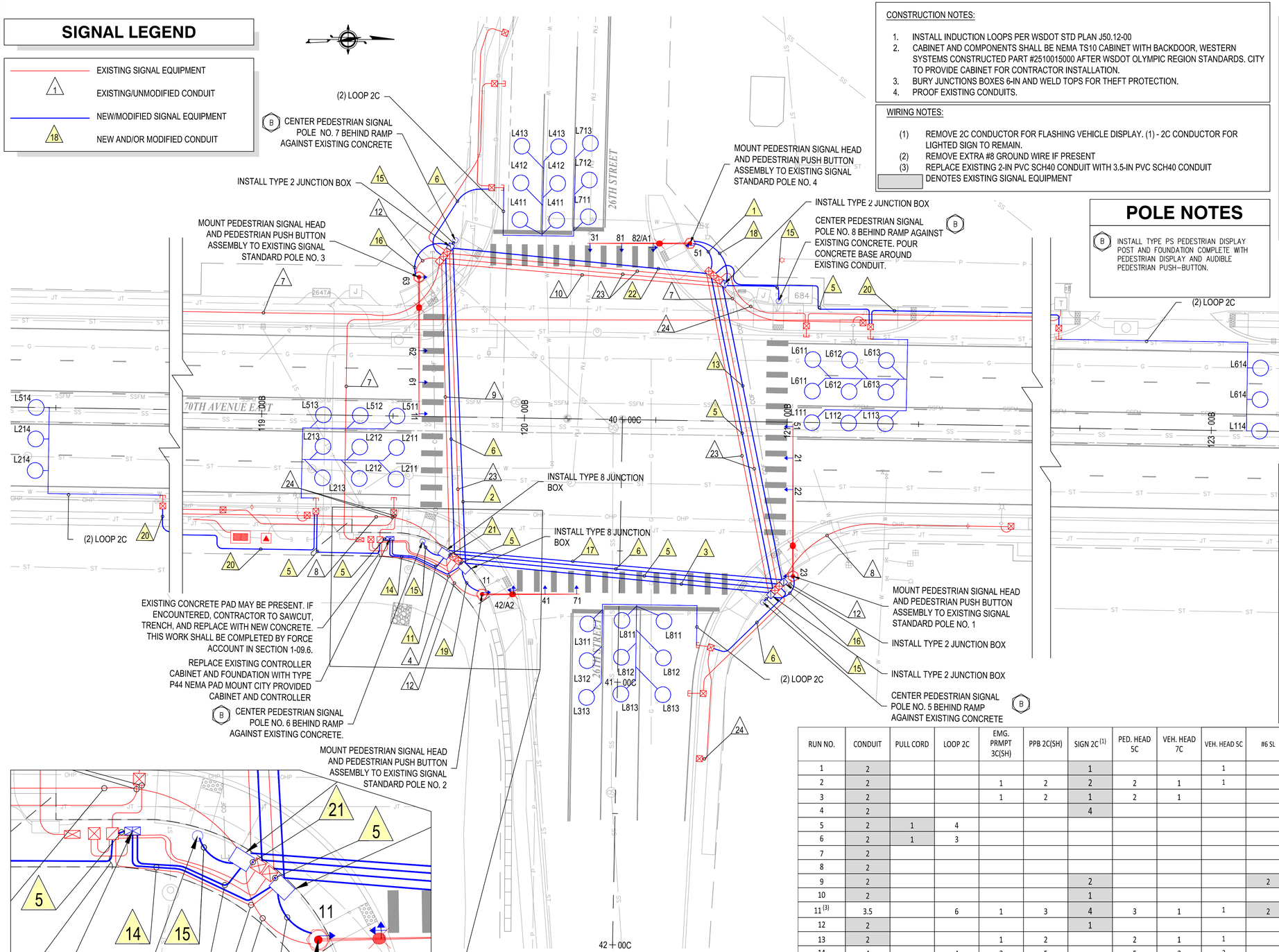

TRAFFIC SIGNAL PLAN VIEW

1" = 20'

CONSTRUCTION NOTES:

1. INSTALL INDUCTION LOOPS PER WSDOT STD PLAN J50.12-00
2. CABINET AND COMPONENTS SHALL BE NEMA TS10 CABINET WITH BACKDOOR, WESTERN SYSTEMS CONSTRUCTED PART #2510015000 AFTER WSDOT OLYMPIC REGION STANDARDS. CITY TO PROVIDE CABINET FOR CONTRACTOR INSTALLATION.
3. BURY JUNCTIONS BOXES 6-IN AND WELD TOPS FOR THEFT PROTECTION.
4. PROOF EXISTING CONDUITS.

WIRING NOTES:

(1) REMOVE 2C CONDUCTOR FOR FLASHING VEHICLE DISPLAY. (1) - 2C CONDUCTOR FOR LIGHTED SIGN TO REMAIN.
(2) REMOVE EXTRA #8 GROUND WIRE IF PRESENT
(3) REPLACE EXISTING 2-IN PVC SCH40 CONDUIT WITH 3.5-IN PVC SCH40 CONDUIT
DENOTES EXISTING SIGNAL EQUIPMENT

POLE NOTES

B INSTALL TYPE PS PEDESTRIAN DISPLAY POST AND FOUNDATION COMPLETE WITH PEDESTRIAN DISPLAY AND AUDIBLE PEDESTRIAN PUSH-BUTTON.

DISPLAY PANEL

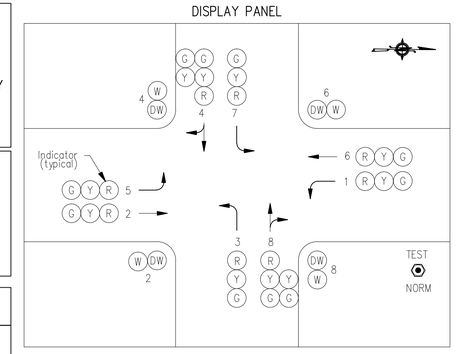

EVPE PHASES		PHASE DIAGRAM	
A	Ø2 + Ø5	Ø1	Ø5
B	Ø4 + Ø7	Ø2	Ø6
C	Ø1 + Ø6	Ø3	Ø7
D	Ø3+ Ø8	Ø4	Ø8

SIGNAL HEAD AND PHASE ID

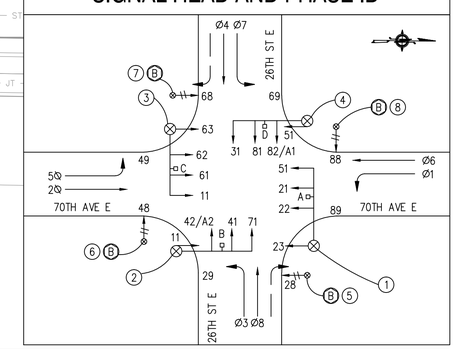

RUN NO.	CONDUIT	PULL CORD	LOOP 2C	EMG. PRMPT 3C(SH)	PPB 2C(SH)	SIGN 2C (1)	PED. HEAD 5C	VEH. HEAD 7C	VEH. HEAD 5C	#6 SL	#8 SL	#8 GFI	#8 GROUND (2)	#3/0 CONTROL PWR	FILL AREA	Notes
1	2					1			1				1		8.7%	Existing Conduit
2	2			1	2	2	2	1	1				1		37.4%	Existing Conduit
3	2			1	2	1	2	1					1		29.4%	Existing Conduit
4	2					4							1		14.5%	Existing Conduit
5	2	1	4												13.2%	Existing Conduit
6	2	1	3												8.8%	Existing Conduit
7	2													3	28.4%	Existing Conduit
8	2										2				3.4%	Existing Conduit
9	2					2				2	2	2	1		21.1%	Existing Conduit
10	2					1					2	2	1		12.9%	Existing Conduit
11 (3)	3.5		6	1	3	4	3	1	1	2	2	2	1		24.6%	New Conduit
12	2					1					2	2	1		11.2%	Existing Conduit
13	2			1	2		2	1	1				1		31.2%	Existing Conduit
14	4		4	3	5		5	3	3				1		23.3%	New Conduit
15	1.5				1		1						1		14.4%	New Conduit
16	2			1	1	1	1	1					1		18.7%	Existing Conduit
17	2			1	2	1	2	1	1		2	2	1		42.1%	Existing Conduit
18	2			1	1	1	1	1	1		2	2	1		29.8%	Existing Conduit
19	2			1	1		1	1	2				1		24.5%	Existing Conduit
20	2		2												5.5%	Existing Conduit
21	2		6												16.4%	New Conduit
22	2					1			1				1		9.9%	Existing Conduit
23	2	1													0.7%	Existing Conduit
24	2	1													0.6%	Existing Conduit

SIGNED: 09/15/16

SIGNED: 09/15/16

RH2 ENGINEERING, INC.
www.rh2.com
Tacoma, WA T:1.800.720.8052
550 Pacific Avenue, Suite 1220

CITY OF FIFE
70TH SIGNAL MODIFICATIONS

TRAFFIC SIGNAL PLAN

NO.	DATE	DESCRIPTION	BY	REVIEW

REVISIONS

ENGINEER: OAM
REVIEWED: ERH
SAVE DATE: Sep 14, 2016
PLOT DATE: Sep 15, 2016
CLIENT: FIF
FILENAME: 66TH-DS-SIGNAL.DWG
JOB NO.: 515-108

SCALE: SHOWN

0" 1" 2"

DRAWING IS FULL SCALE WHEN BAR MEASURES 2"

DWG NO.: S01
SHEET NO.: 3 / 12

LEGEND

PROPOSED	EXISTING
A. VEHICLE SIGNAL HEAD	D. STREET NAME SIGN EXISTING
B. PEDESTRIAN SIGNAL HEAD	E. PRE-EMPT DETECTOR
C. PEDESTRIAN PUSH BUTTON ASSEMBLY	F. TERMINAL CABINET EXISTING

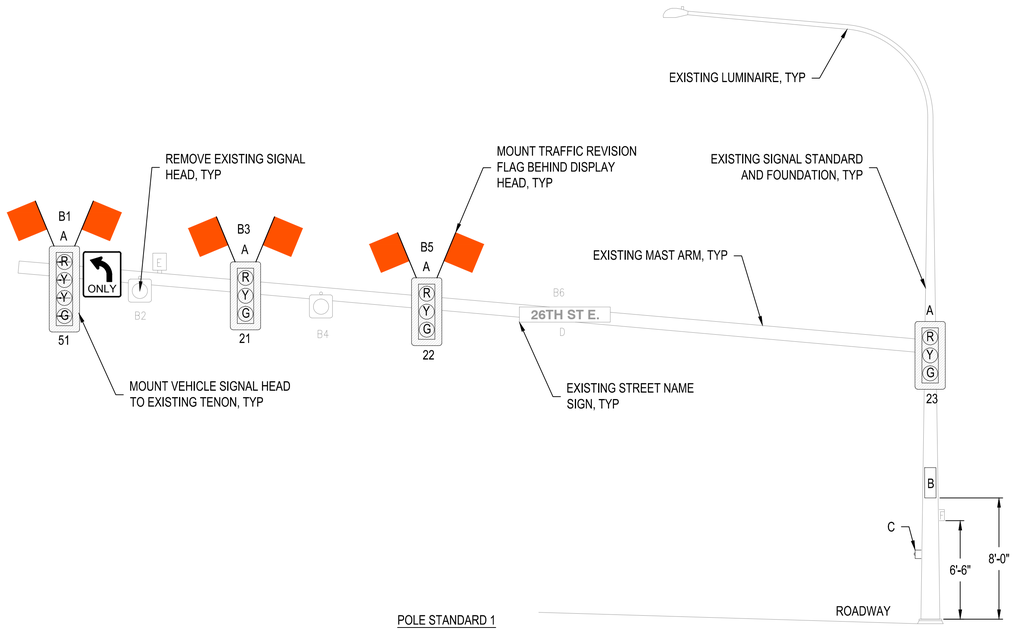

POLE STANDARD 1

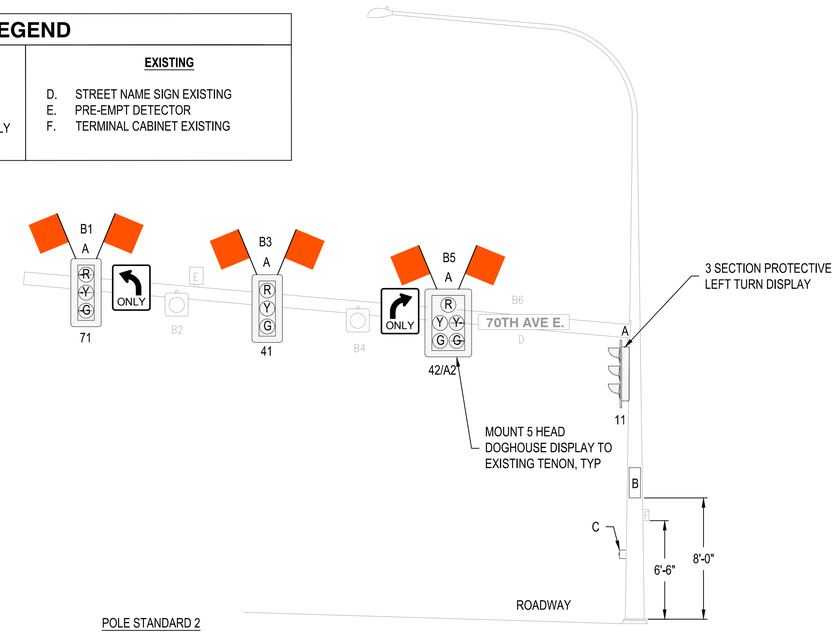

POLE STANDARD 2

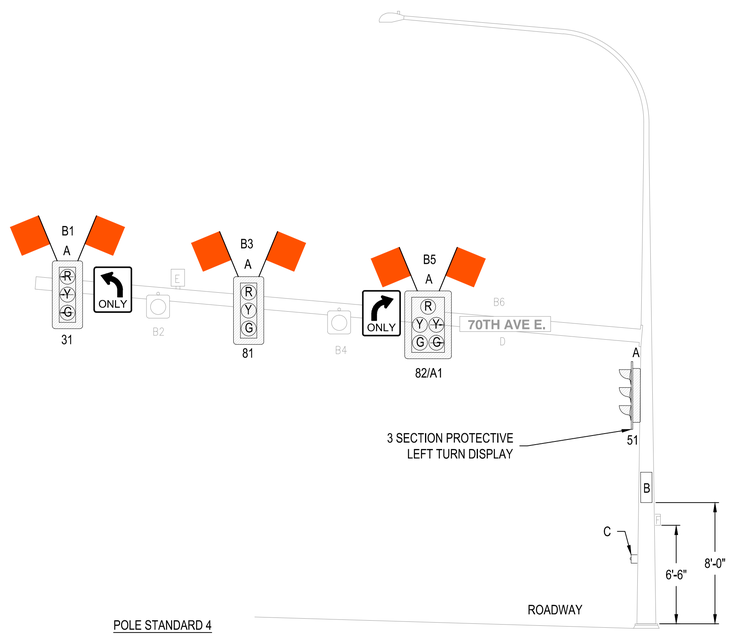

POLE STANDARD 4

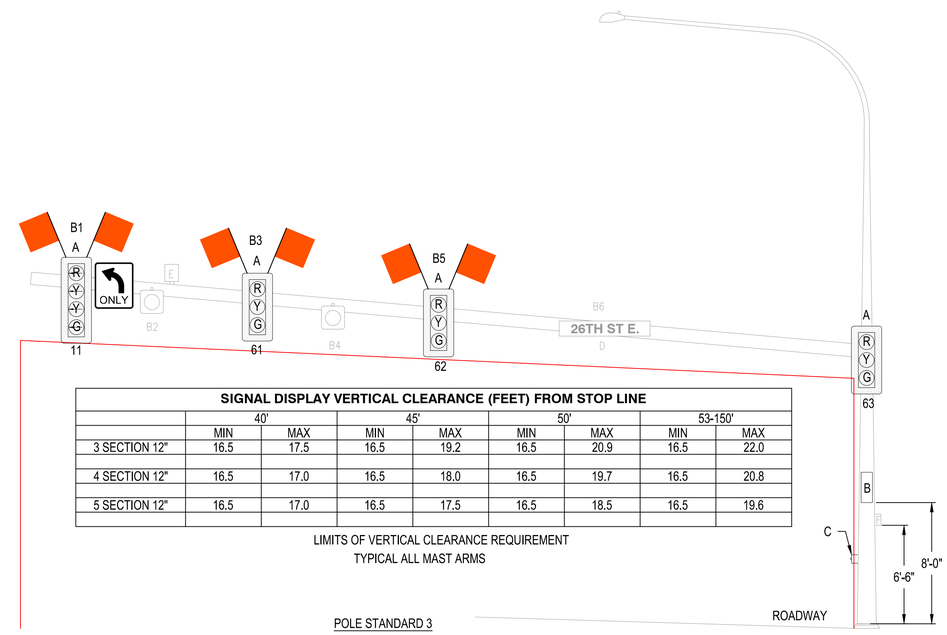

POLE STANDARD 3

SIGNAL DISPLAY VERTICAL CLEARANCE (FEET) FROM STOP LINE

	40'		45'		50'		53-150'	
	MIN	MAX	MIN	MAX	MIN	MAX	MIN	MAX
3 SECTION 12"	16.5	17.5	16.5	19.2	16.5	20.9	16.5	22.0
4 SECTION 12"	16.5	17.0	16.5	18.0	16.5	19.7	16.5	20.8
5 SECTION 12"	16.5	17.0	16.5	17.5	16.5	18.5	16.5	19.6

LIMITS OF VERTICAL CLEARANCE REQUIREMENT
TYPICAL ALL MAST ARMS

SIGNAL STANDARD DETAIL CHART

STD. No.	FIELD LOCATION					TYPE	SIGNAL MAST ARM DATA: OFFSET DISTANCES (FT) (Z) (POLE CL TO ATTACHMENT POINT)						WINDLOAD AREAS (FT)^2 (X)(Y)						(X)(Y)(Z) TOTAL (FT)^3	LUMINAIRE ARM (FT)	FOUNDATION DEPTH (FT)	REMARKS (SEE NOTE BELOW)
	STATION	OFFSET	LT.	RT.	P.O.A.		B1	B2	B3	B4	B5	B6	B1	B2	B3	B4	B5	B6		C	3'RD.	
1	121+03	58'		X	0	III	57	54	45	-	33	24	11.6	7.5	9.2	-	9.2	6	1928	16	9	EXISTING POLE AND FOUNDATION
2	119+86	67'		X	90	III	36	33	24	15	12	7	9.2	7.5	9.2	7.5	14.4	6	1127	16	8	EXISTING POLE AND FOUNDATION
3	119+59	53'	X		0	III	52	49	40	-	28	17	11.6	7.5	9.2	-	9.2	6	1698	16	9	EXISTING POLE AND FOUNDATION
4	120+61	67'	X		90	III	38	35	26	17	14	9	9.2	7.5	9.2	7.5	14.4	6	1234	16	8	EXISTING POLE AND FOUNDATION

NOTE:
REQUIRES ALLOWABLE LATERAL BEARING PRESSURE 2500 PSF OR GREATER.

RH2 ENGINEERING, INC.
www.rh2.com
TACOMA, WA 1.800.720.8052
930 Pacific Avenue, Suite 1220

SIGNED: 09/15/16
SIGNED: 09/15/16

CITY OF FIFE
70TH SIGNAL MODIFICATIONS

SIGNAL DETAILS 1

ENGINEER: OAM
REVIEWED: ERH
SAVE DATE: Sep 14, 2016
PLOT DATE: Sep 19, 2016
CLIENT: FIFE
FILENAME: 66TH-D-SIGNAL.DWG
JOB NO.: 515-108

REVISIONS

NO.	DATE	DESCRIPTION	BY	REVIEW

SCALE: SHOWN
0" 1" 2"
DRAWING IS FULL SCALE WHEN BAR MEASURES 2"

DWG NO.: S02
SHEET NO.: 4 / 12

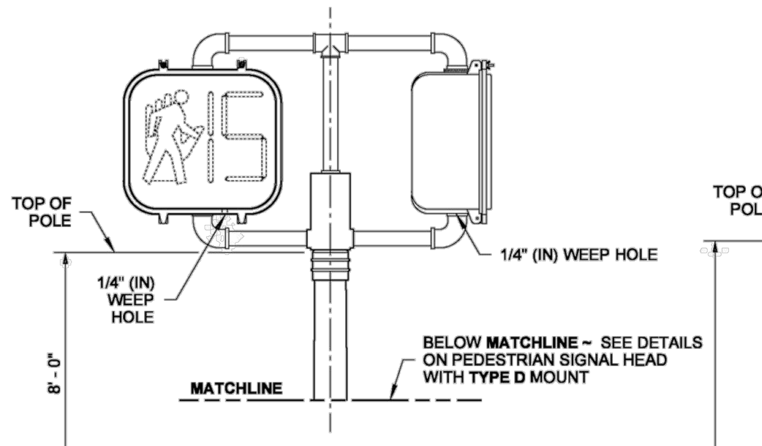

TYPE C MOUNT PLACEMENT

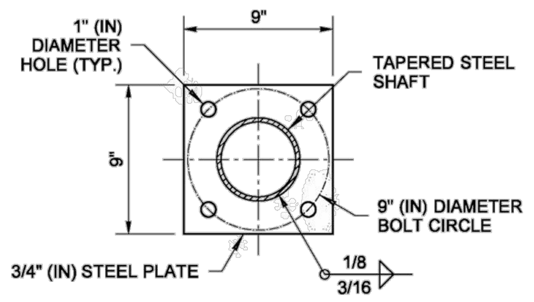

BASE PLATE DETAIL

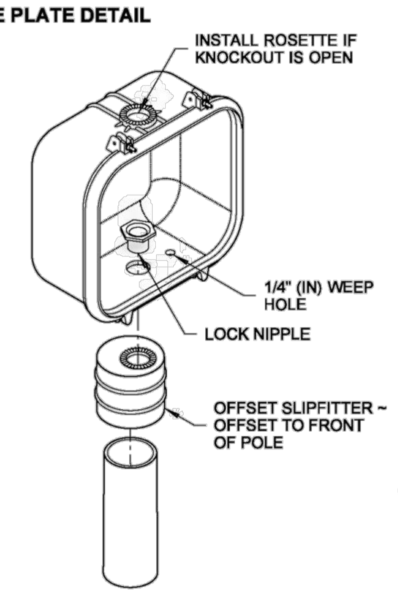

VIEW (A)

TYPE D MOUNTING DETAIL

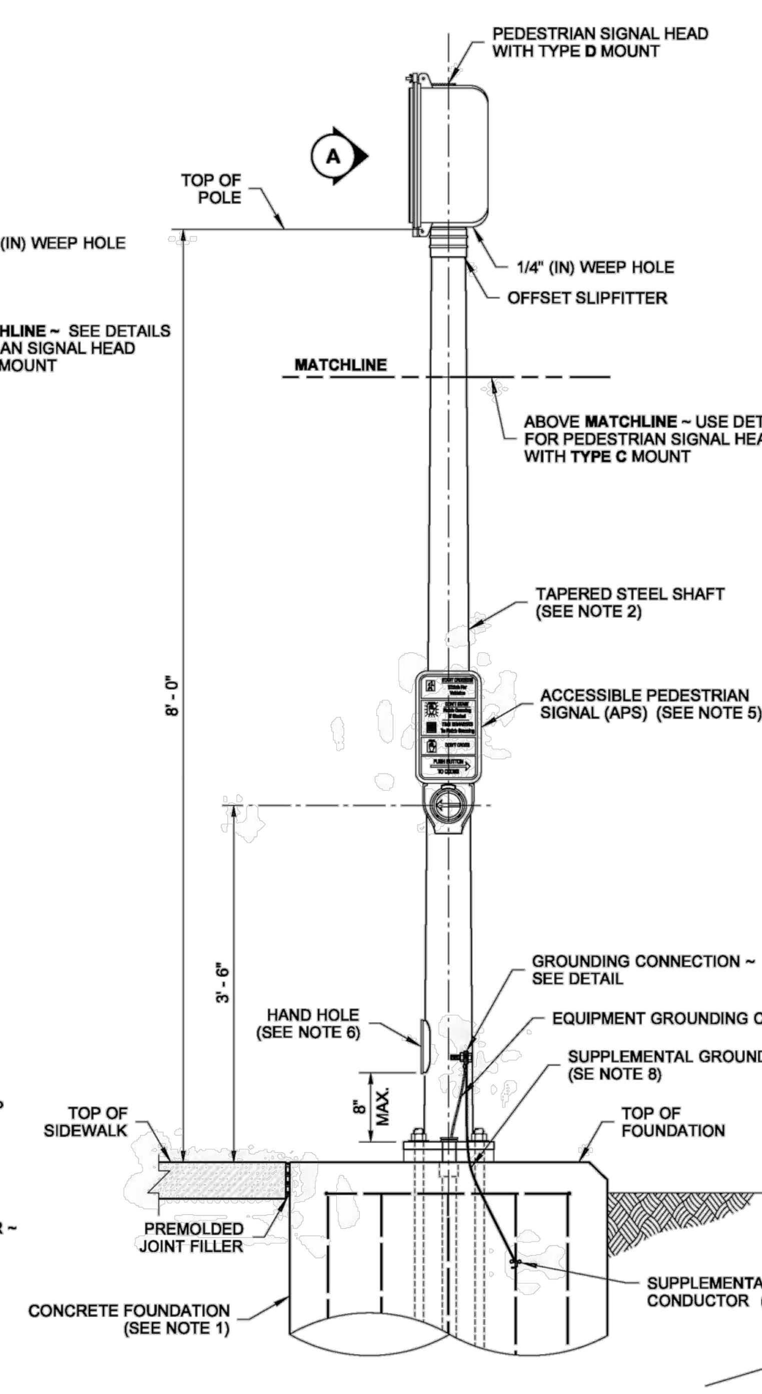

TYPE D MOUNT

PEDESTRIAN SIGNAL STANDARD

(FIXED BASE SHOWN)

NOTES

1. See **Standard Plan J-21.10** for Signal Standard Foundation with Fixed Base and Slip Base details.
2. Steel shaft shall be tapered either round or dodecagon (12-sided), 11 gage, 4 1/2" (in) O.D. at slipfitter weld. Taper shall be 0.14" (in) per foot.
3. Welding of structures shall be in accordance with the latest edition of the AWS D1.1 Structural Welding Code - Steel. All butt welds shall be ground flush with base metal.
4. See **Standard Plan J-20.26** for Accessible Pedestrian Pushbutton details.
5. See **Standard Plan J-20.20** for Accessible Pedestrian Signal Standard Electrical details.
6. Hand holes shall include a removable, rain-tight cover and gasket, fastened with two stainless steel screws (ASTM 593).
7. Supplemental grounding conductor shall be non-insulated #4 AWG stranded copper and shall be clamped to vertical rebar with a connector suitable for use embedded in concrete. Provide 3' - 0" min. slack. Attach to pole grounding stud with a full circle crimp-on connector (crimped with a manufacturer recommended crimper).
8. The junction box serving the standard shall preferably be located 5' - 0" (10' - 0" max.) from the standard.
9. Where shown in the plans, install plaque (R10 - 32P) "PUSH BUTTON FOR 2 SECONDS FOR EXTRA CROSSING TIME" two inches above the Accessible Pedestrian Signal (APS) Assembly.

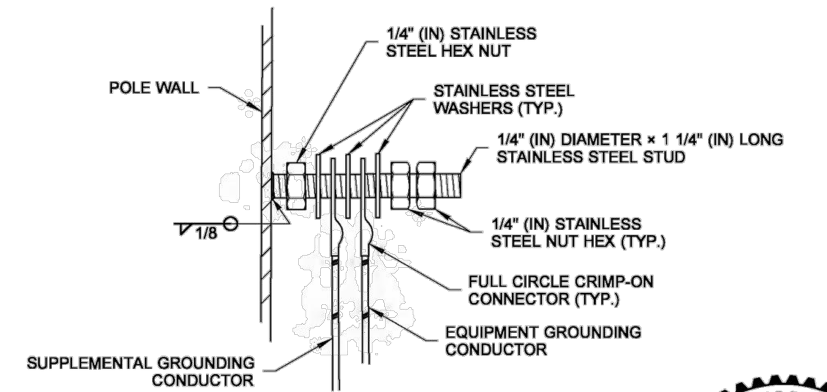

GROUNDING CONNECTION DETAIL

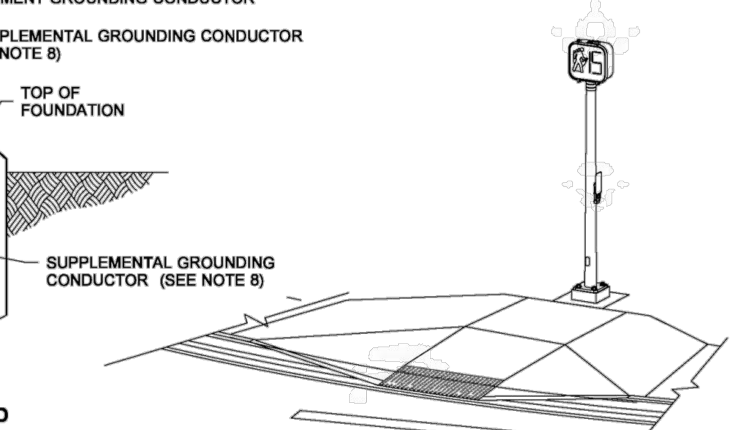

PERSPECTIVE VIEW

Bailey, Ted
Jun 26 2014 4:26 PM

PEDESTRIAN SIGNAL STANDARD (TYPE PS) DETAILS

STANDARD PLAN J-20.16-02

SHEET 1 OF 1 SHEET

APPROVED FOR PUBLICATION
Bakotich, Pasco
Jun 30 2014 3:12 PM
STATE DESIGN ENGINEER
Washington State Department of Transportation

DRAWN BY: FERN LIDDELL

DRAWN BY: LISA CYFORD

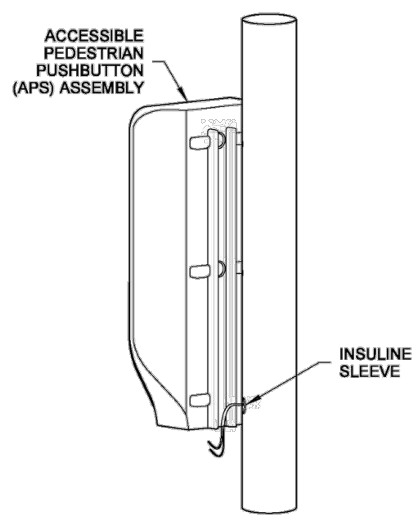

WIRE ROUTING
PERSPECTIVE VIEW

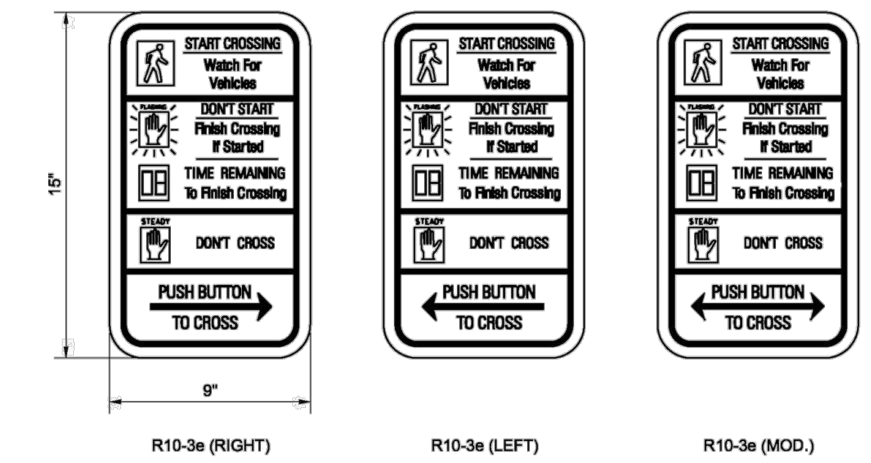

PEDESTRIAN PUSHBUTTON INSTRUCTIONAL SIGN

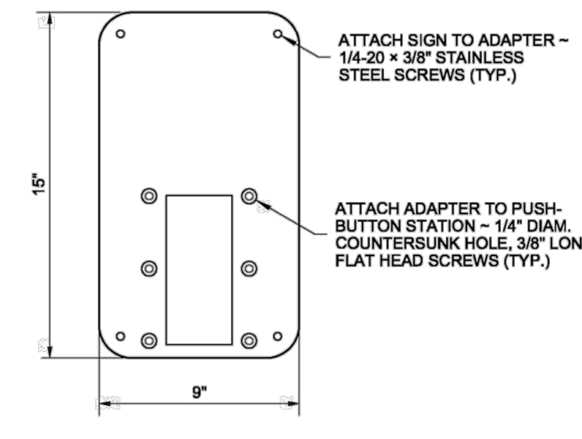

PEDESTRIAN PUSHBUTTON FRAME ADAPTER

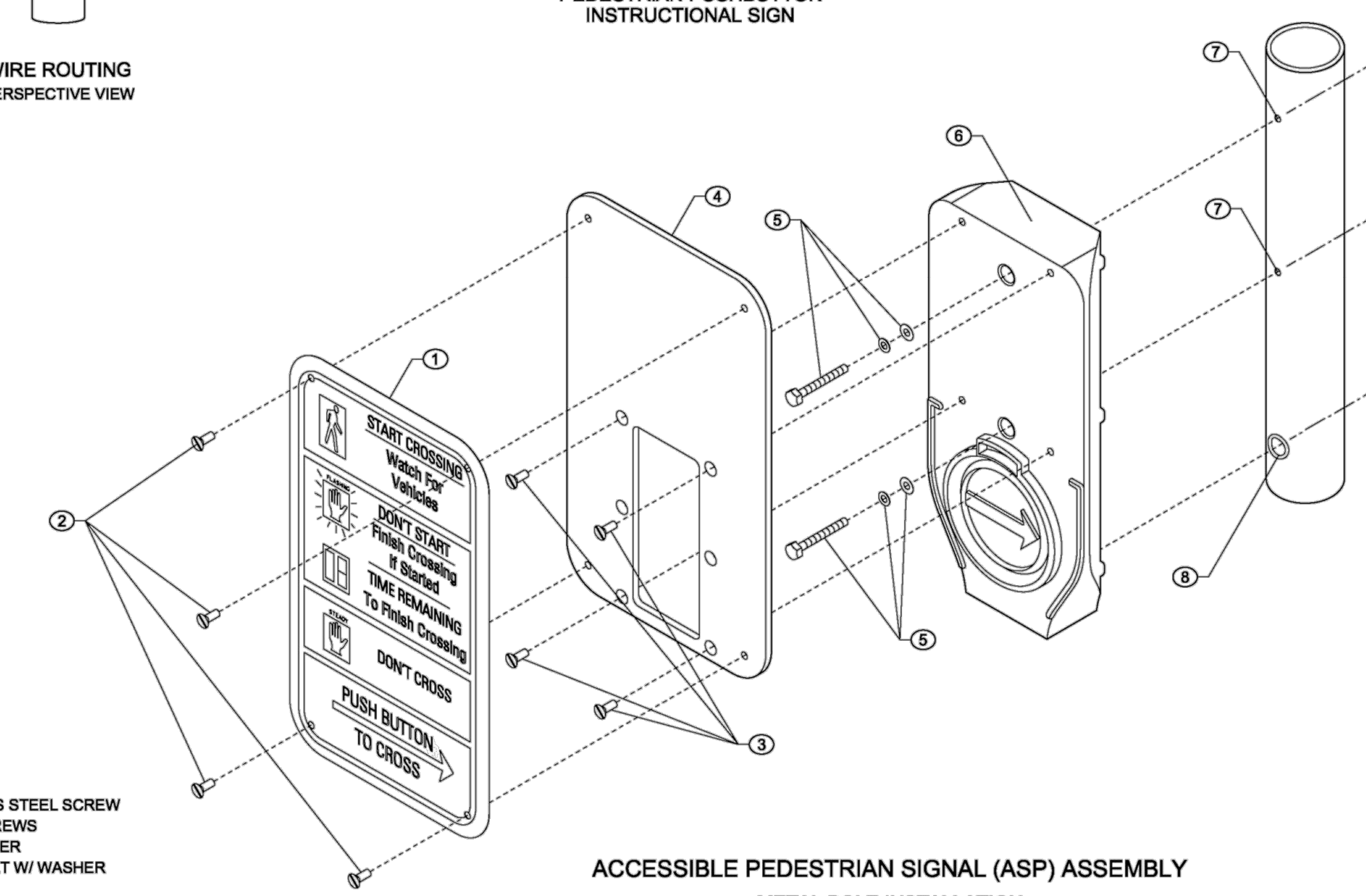

KEY

1. FACE PLATE
2. 1/4-20 × 3/8" LONG STAINLESS STEEL SCREW
3. 1/4-20 STAINLESS STEEL SCREWS
4. PUSHBUTTON FRAME ADAPTER
5. 1/4-20 STAINLESS STEEL BOLT W/ WASHER AND LOCK WASHER
6. PUSHBUTTON STATION
7. DRILL AND TAP SHAFT FOR 1/4" DIAM. BOLT
8. DRILL AND TAP SHAFT FOR 5/8" WIRE GUIDE HOLE - ADD INSULINER

ACCESSIBLE PEDESTRIAN SIGNAL (ASP) ASSEMBLY

METAL POLE INSTALLATION
PPB-M

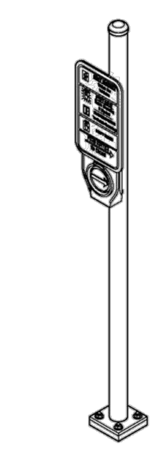

ISOMETRIC VIEW
(METAL POLE SHOWN)

ACCESSIBLE PEDESTRIAN PUSHBUTTON (PPB) DETAILS

STANDARD PLAN J-20.26-01

SHEET 1 OF 2 SHEETS

APPROVED FOR PUBLICATION
Pasco Bakotich III 7/12/12
STATE DESIGN ENGINEER DATE
Washington State Department of Transportation

NOTE: THIS PLAN IS NOT A LEGAL ENGINEERING DOCUMENT BUT AN ELECTRONIC DUPLICATE. THE ORIGINAL, SIGNED BY THE ENGINEER AND APPROVED FOR PUBLICATION, IS KEPT ON FILE AT THE WASHINGTON STATE DEPARTMENT OF TRANSPORTATION. A COPY MAY BE OBTAINED UPON REQUEST.

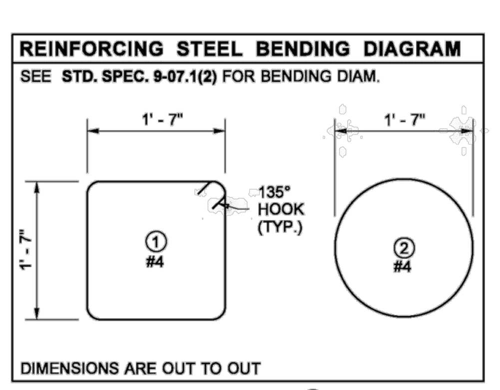

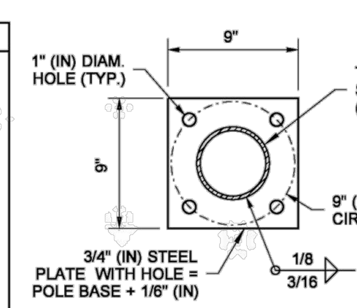

BASE PLATE DETAIL

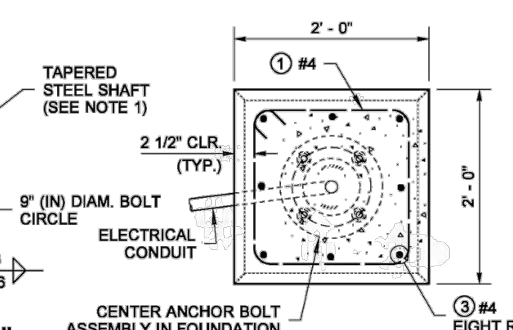

SECTION (B)

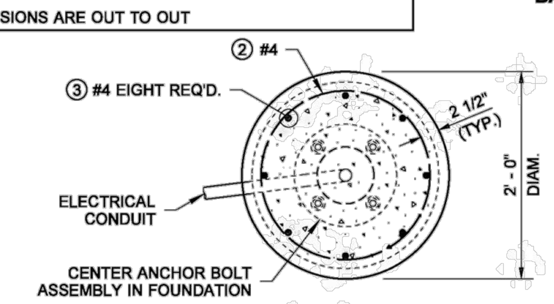

SECTION (A)

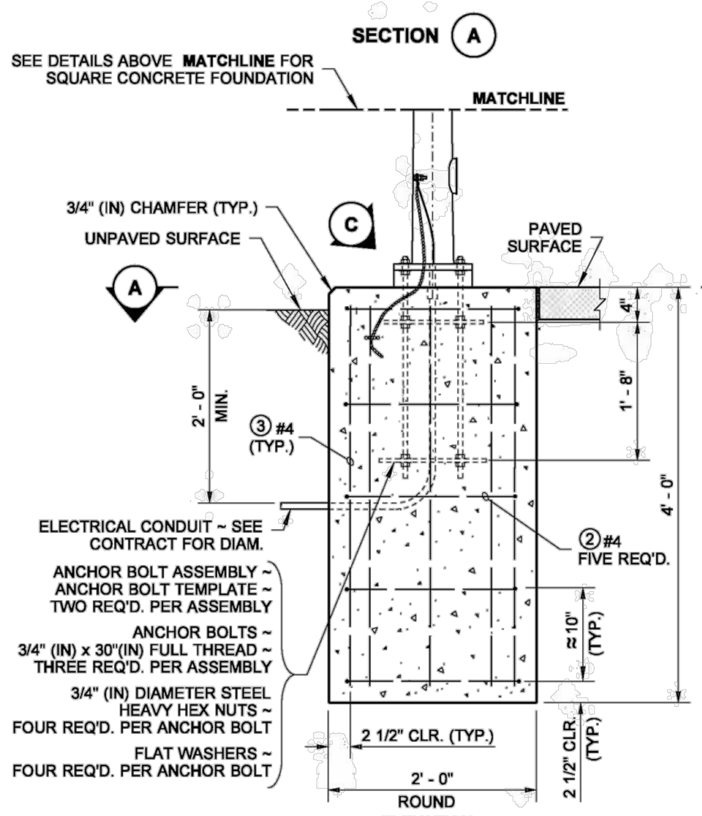

ROUND CONCRETE FOUNDATION DETAIL

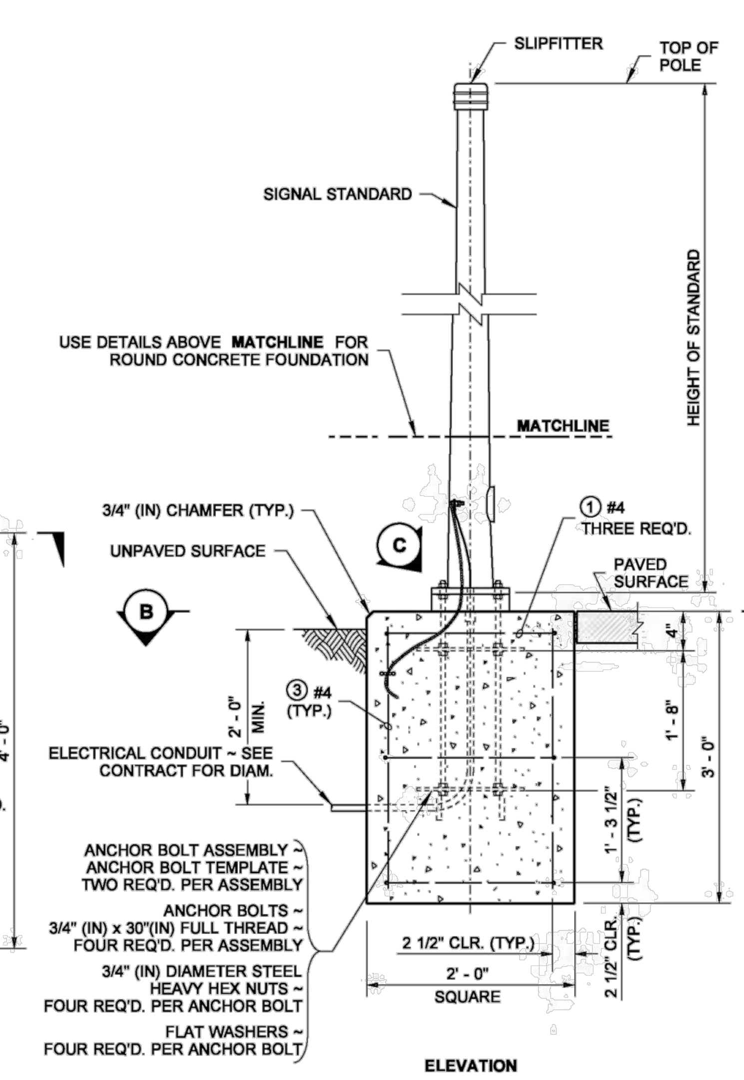

FIXED BASE

SQUARE CONCRETE FOUNDATION DETAIL

NOTES

1. Clamping bolts shall be tightened to 50 ft-lbs max. torque. After state inspection, burr threads to prevent nut rotation. DO NOT OVERTIGHTEN.
2. The final height of the Anchor Bolts shall be below the top of the slip plate assembly to ensure proper function of the slip base.
3. Supplemental grounding conductor shall be non-insulated #4 AWG stranded copper and shall be clamped to vertical rebar with a connector suitable for use embedded in concrete: Provide 3' - 0" min. slack. Attach to pole grounding stud with a full circle crimp-on connector (crimped with a manufacturer recommended crimper).
4. Junction box serving the Standard shall preferably be located 5' - 0" (10' - 0" Max.) from the Standard.
5. Provide cable tie at wiring entering the junction box (for slip base installations only) ~ See **Detail A, Standard Plan J-28.70**.
6. Keeper Plate shall not extend beyond the edges of the pole base plate.

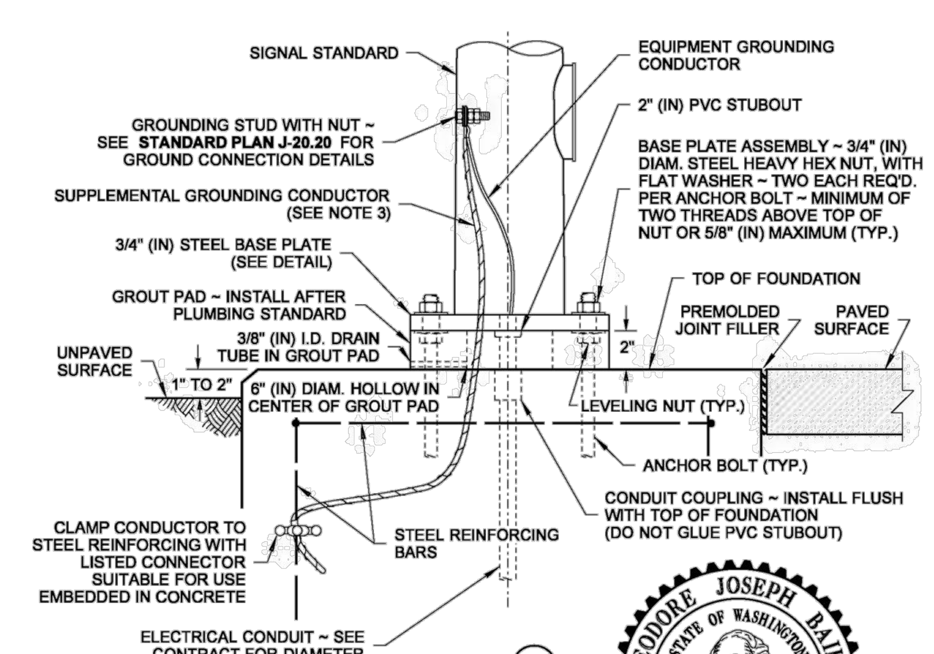

DETAIL (C)

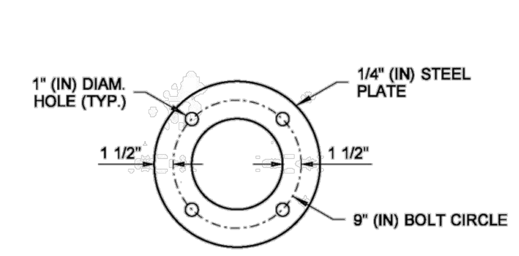

ANCHOR BOLT TEMPLATE

Bailey, Ted
Jun 26 2014 4:29 PM

TYPE PS, TYPE 1, RM & FB SIGNAL STANDARD FOUNDATION DETAILS

STANDARD PLAN J-21.10-04

SHEET 1 OF 2 SHEETS

APPROVED FOR PUBLICATION
Bakotich, Pasco
Jun 30 2014 3:12 PM
STATE DESIGN ENGINEER
Washington State Department of Transportation

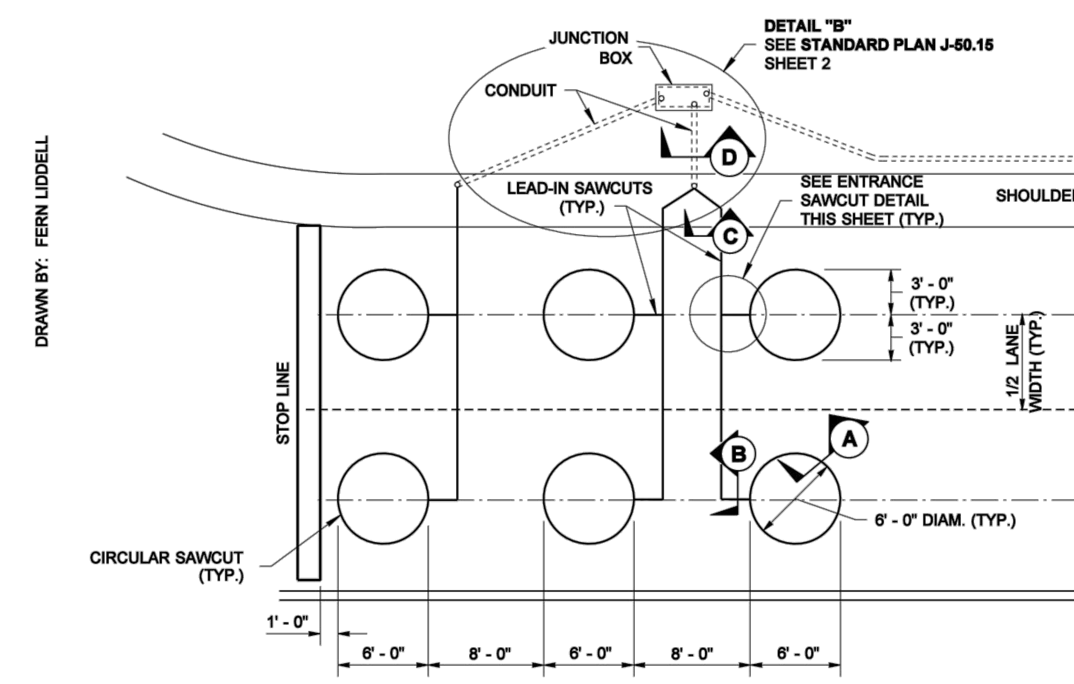

TYPE 3 STOP LINE LOOPS

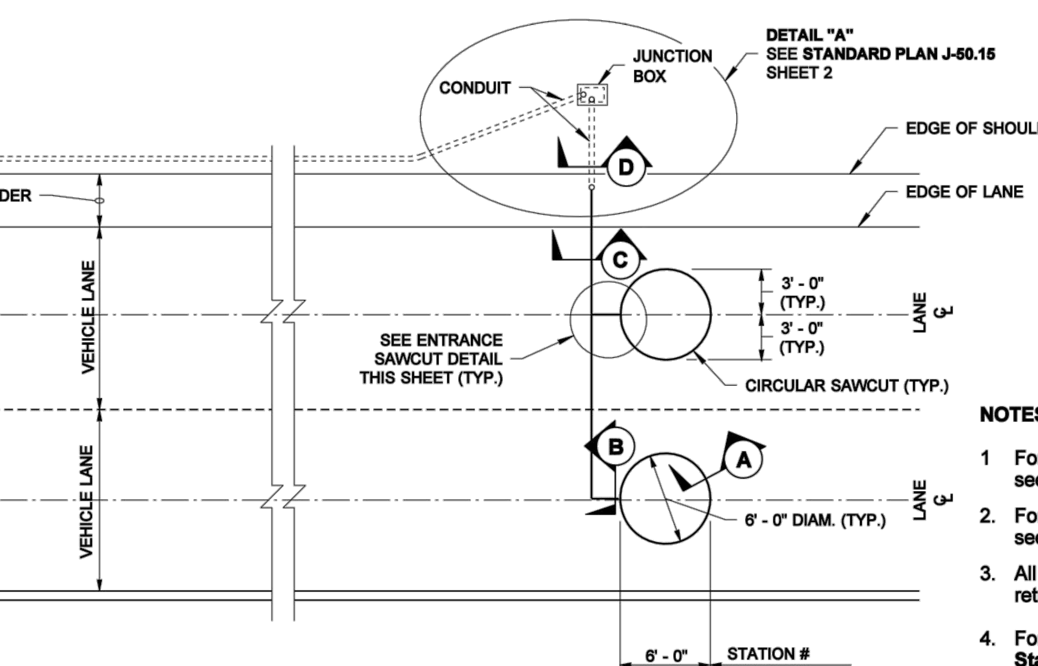

TYPE 3 ADVANCE LOOPS

NOTES

1. For Installation Notes and Details see **Standard Plan J-50.15.**
2. For Sections A, B, C, and D, see **Standard Plan J-50.15.**
3. All of the loop lead-in wires shall return to the Junction Box.
4. For Splice Detail, see **Standard Plan J-50.15.**
5. For Loop numbering Layout Details, see **sheet 3.**
6. For additional Induction Loop Details, see **Standard Plan J-50.15.**

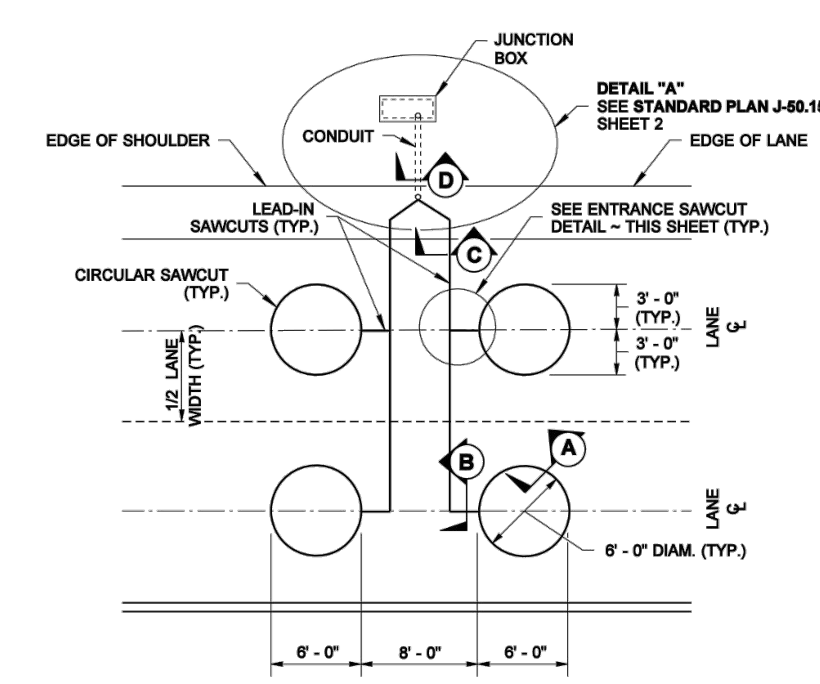

TYPE 3 SAMPLING LOOPS

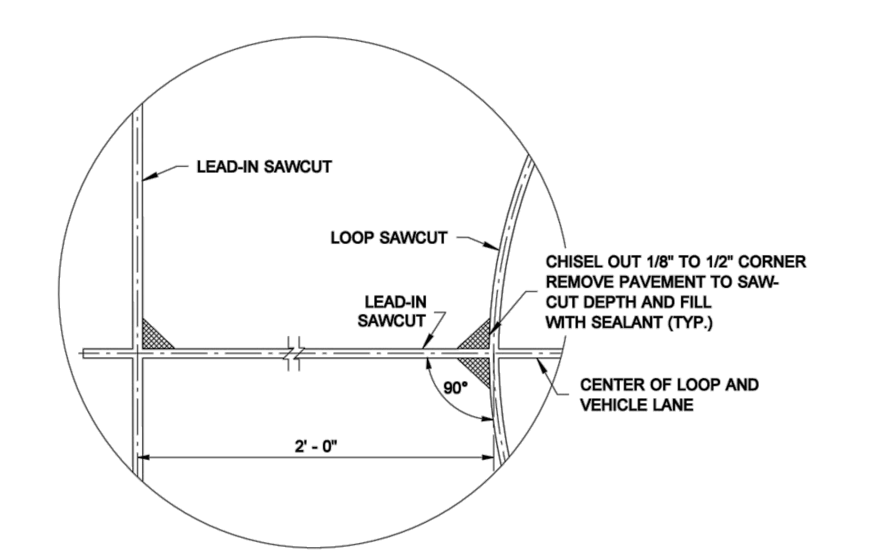

ENTRANCE SAWCUT DETAIL

TYPE 3 INDUCTION LOOP

STANDARD PLAN J-50.12-00

SHEET 1 OF 3 SHEETS

APPROVED FOR PUBLICATION
Pasco Bakotich III 06-03-11
STATE DESIGN ENGINEER DATE
Washington State Department of Transportation

NOTE: THIS PLAN IS NOT A LEGAL ENGINEERING DOCUMENT BUT AN ELECTRONIC DUPLICATE. THE ORIGINAL, SIGNED BY THE ENGINEER AND APPROVED FOR PUBLICATION, IS KEPT ON FILE AT THE WASHINGTON STATE DEPARTMENT OF TRANSPORTATION. A COPY MAY BE OBTAINED UPON REQUEST.

SIGNED: 09/15/16

SIGNED: 09/15/16

RH2 ENGINEERS PLANNERS SCIENTISTS

RH2 ENGINEERING, INC.
www.rh2.com 1.800.720.8052
TACOMA, WA
950 Pacific Avenue, Suite 1220

CITY OF FIFE

70TH SIGNAL MODIFICATIONS

SIGNAL DETAILS 2

FIFE WASHINGTON

ENGINEER: OAM | SAVE DATE: Sep 14, 2016 | CLIENT: FIF | JOB NO.: 515-108

REVIEWED: ERH | PLOT DATE: Sep 15, 2016 | FILENAME: 66TH-D-SIGNAL.DWG

REVISIONS

NO.	DATE	DESCRIPTION	BY	REVIEW

SCALE: SHOWN

0" 1" 2"

DRAWING IS FULL SCALE WHEN BAR MEASURES 2"

DWG NO.: S03

SHEET NO.: 5 / 12

DRAWN BY: FERN LUDDELL

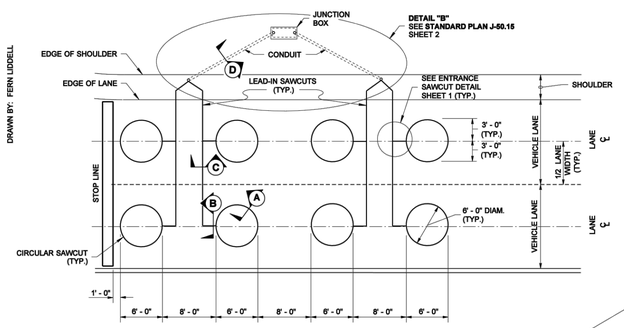

PLAN
TYPE 3A STOP LINE LOOPS

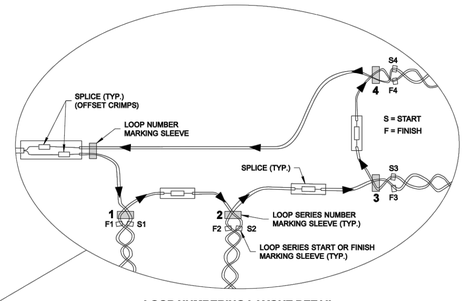

LOOP NUMBERING LAYOUT DETAIL

LOOP NUMBER MARKING DETAIL

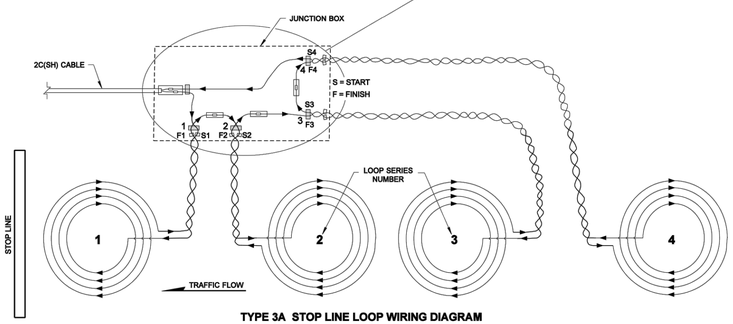

TYPE 3A STOP LINE LOOP WIRING DIAGRAM
SERIES SPLICE SHOWN

JOHN C. NISBET
STATE OF WASHINGTON
29115
REGISTERED
PROFESSIONAL ENGINEER

NOTE: THIS PLAN IS NOT VALID UNLESS THIS DOCUMENT BEARS AN ORIGINAL LOCAL SEAL, THE ORIGINAL SIGNATURE OF THE PROFESSIONAL ENGINEER, AND THE DATE OF SIGNATURE. PLOT OF THE WASHINGTON STATE DEPARTMENT OF TRANSPORTATION, A COPY MUST BE ORDERED FROM YOUR AGENCY.

TYPE 3 INDUCTION LOOP

STANDARD PLAN J-50.12-00

SHEET 3 OF 3 SHEETS

APPROVED FOR PUBLICATION

Pasco Bakotich III *06-03-11*
STATE DESIGN ENGINEER DATE
Washington State Department of Transportation

DRAWN BY: FERN LUDDELL

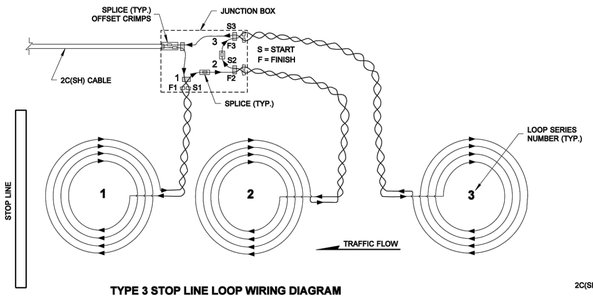

TYPE 3 STOP LINE LOOP WIRING DIAGRAM
SERIES SPLICE SHOWN

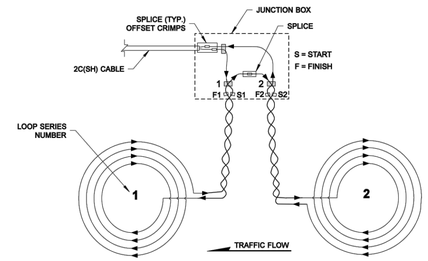

TYPE 3 SAMPLING LOOP WIRING DIAGRAM
SERIES SPLICE SHOWN

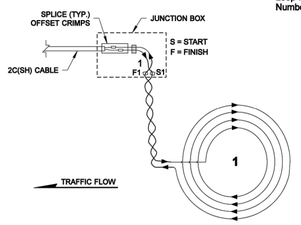

TYPE 3 ADVANCE
LOOP WIRING DIAGRAM

LOOP NUMBER MARKING DETAIL

NOTES

Loop numbering layout will be simillar to Loop Numbering Layout Detail, Sheet 3

JOHN C. NISBET
STATE OF WASHINGTON
29115
REGISTERED
PROFESSIONAL ENGINEER

NOTE: THIS PLAN IS NOT VALID UNLESS THIS DOCUMENT BEARS AN ORIGINAL LOCAL SEAL, THE ORIGINAL SIGNATURE OF THE PROFESSIONAL ENGINEER, AND THE DATE OF SIGNATURE. PLOT OF THE WASHINGTON STATE DEPARTMENT OF TRANSPORTATION, A COPY MUST BE ORDERED FROM YOUR AGENCY.

TYPE 3 INDUCTION LOOP

STANDARD PLAN J-50.12-00

SHEET 2 OF 3 SHEETS

APPROVED FOR PUBLICATION

Pasco Bakotich III *06-03-11*
STATE DESIGN ENGINEER DATE
Washington State Department of Transportation

STATE OF WASHINGTON
JOHN R. HOME
29115
REGISTERED PROFESSIONAL ENGINEER
SIGNED: 09/15/16

STATE OF WASHINGTON
GEORGE T. DILAHUNT
43748
REGISTERED PROFESSIONAL ENGINEER
SIGNED: 09/15/16

RH2 ENGINEERS PLANNERS SCIENTISTS

RH2 ENGINEERING, INC.
www.rh2.com
TACOMA, WA 1.800.720.8052
550 Pacific Avenue, Suite 1220

FIFE WASHINGTON

CITY OF FIFE

70TH SIGNAL MODIFICATIONS

SIGNAL DETAILS 3

ENGINEER: OAM
REVIEWED: ERH
SAVE DATE: Sep 14, 2016
PLOT DATE: Sep 15, 2016
CLIENT: FIFE
FILENAME: 66TH-D-SIGNAL.DWG
JOB NO.: 515-108

REVISIONS

NO.	DATE	DESCRIPTION	BY	REVIEW

SCALE: SHOWN
0" 1" 2"
DRAWING IS FULL SCALE WHEN BAR MEASURES 2"

DWG NO.: S04
SHEET NO.: 6 / 12

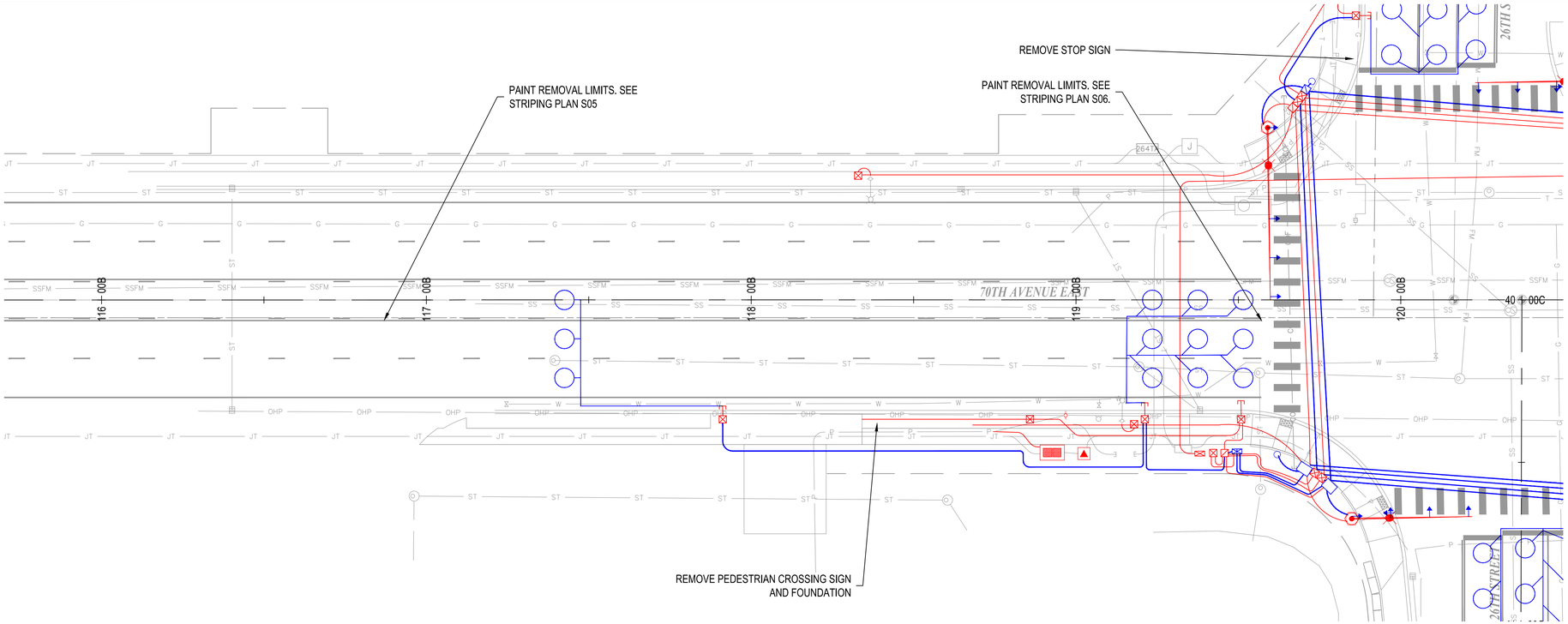

PLAN VIEW

1" = 20'

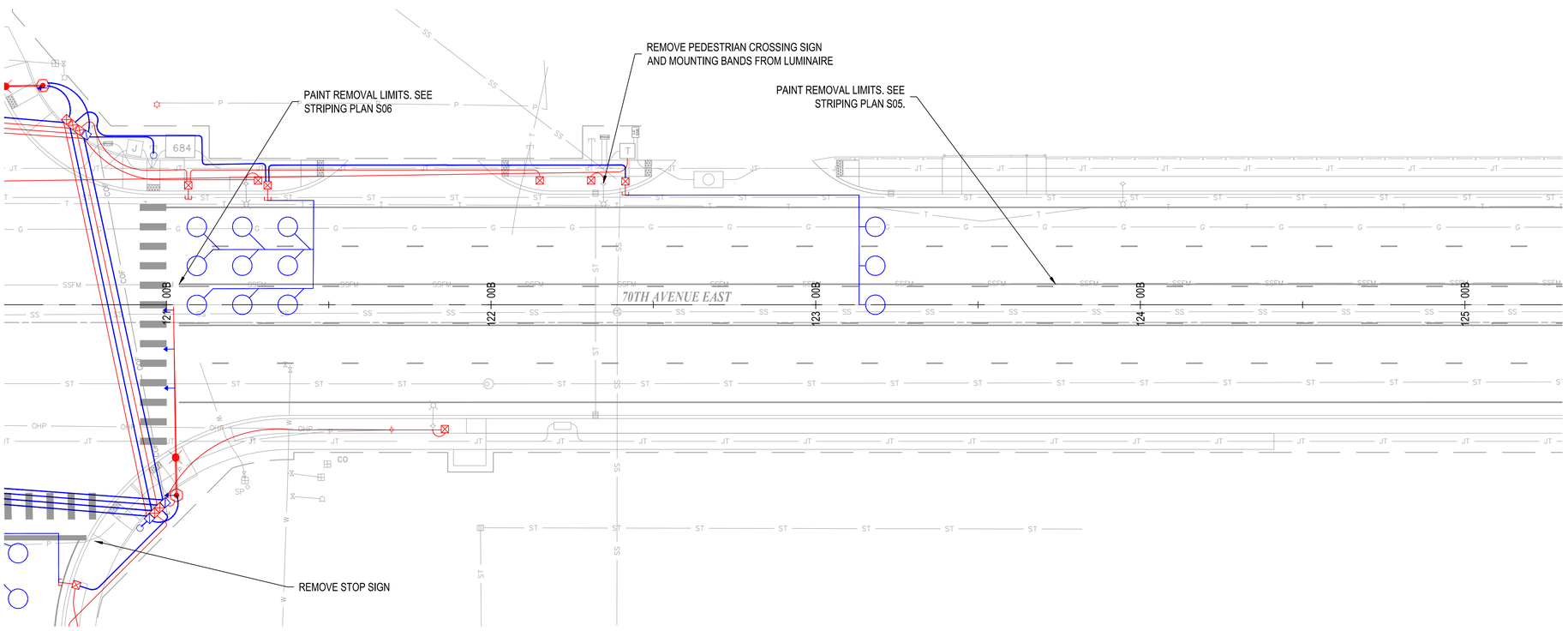

PLAN VIEW

1" = 20'

VICINITY MAP

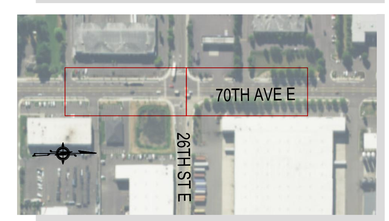

SIGNED: 09/15/16

SIGNED: 09/15/16

RH2 ENGINEERING, INC.
www.rh2.com
TACOMA, WA 1.800.720.8052
930 Pacific Avenue, Suite 1220

CITY OF FIFE
70TH SIGNAL MODIFICATIONS

70TH AVE E ROADWAY PREPARATION

JOB NO.: 515-108
CLIENT: FIFE
FILENAME: 66TH-DI-SIGNAL.DWG
SAVE DATE: Sep 14, 2016
PLOT DATE: Sep 15, 2016
ENGINEER: OAM
REVIEWED: ERH

REVISIONS

NO.	DATE	DESCRIPTION	BY	REVIEW

SCALE: SHOWN

0" 1" 2"

DRAWING IS FULL SCALE WHEN BAR MEASURES 2"

DWG NO.: S05

SHEET NO.: 7 / 12

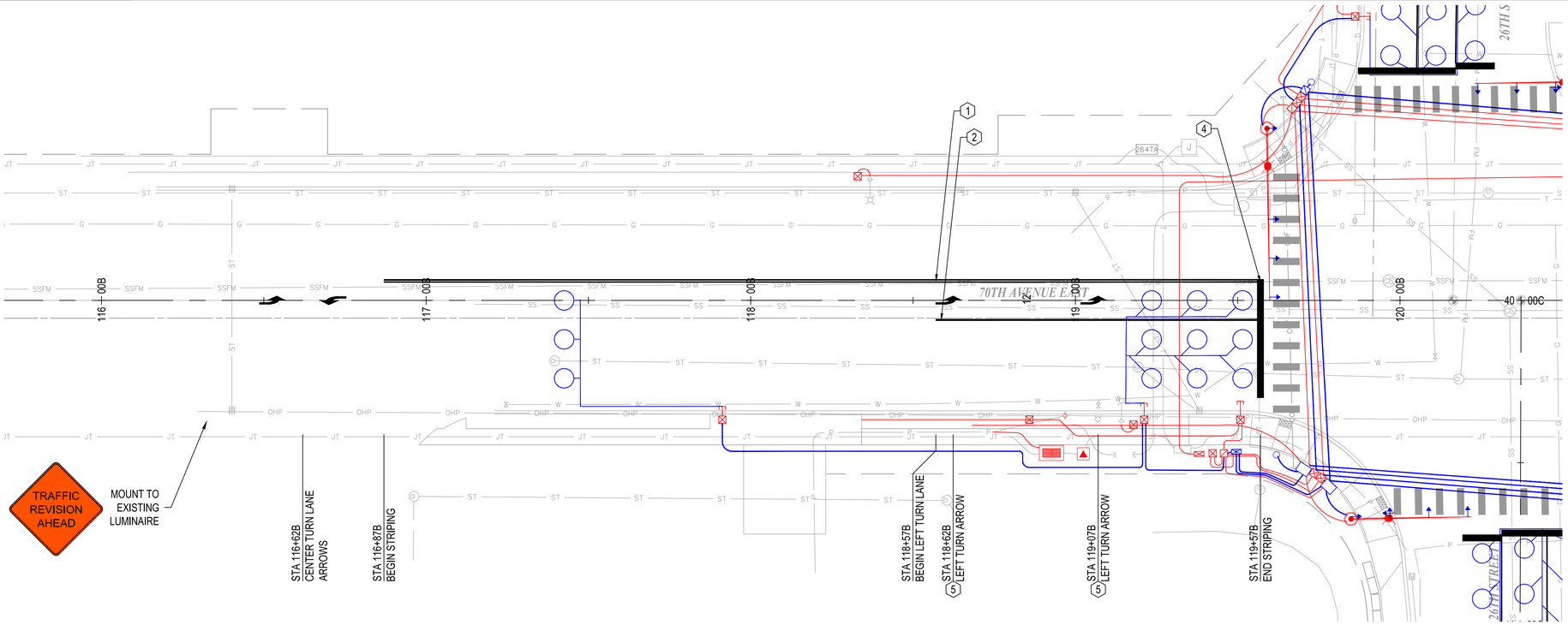

PLAN VIEW

1" = 20'

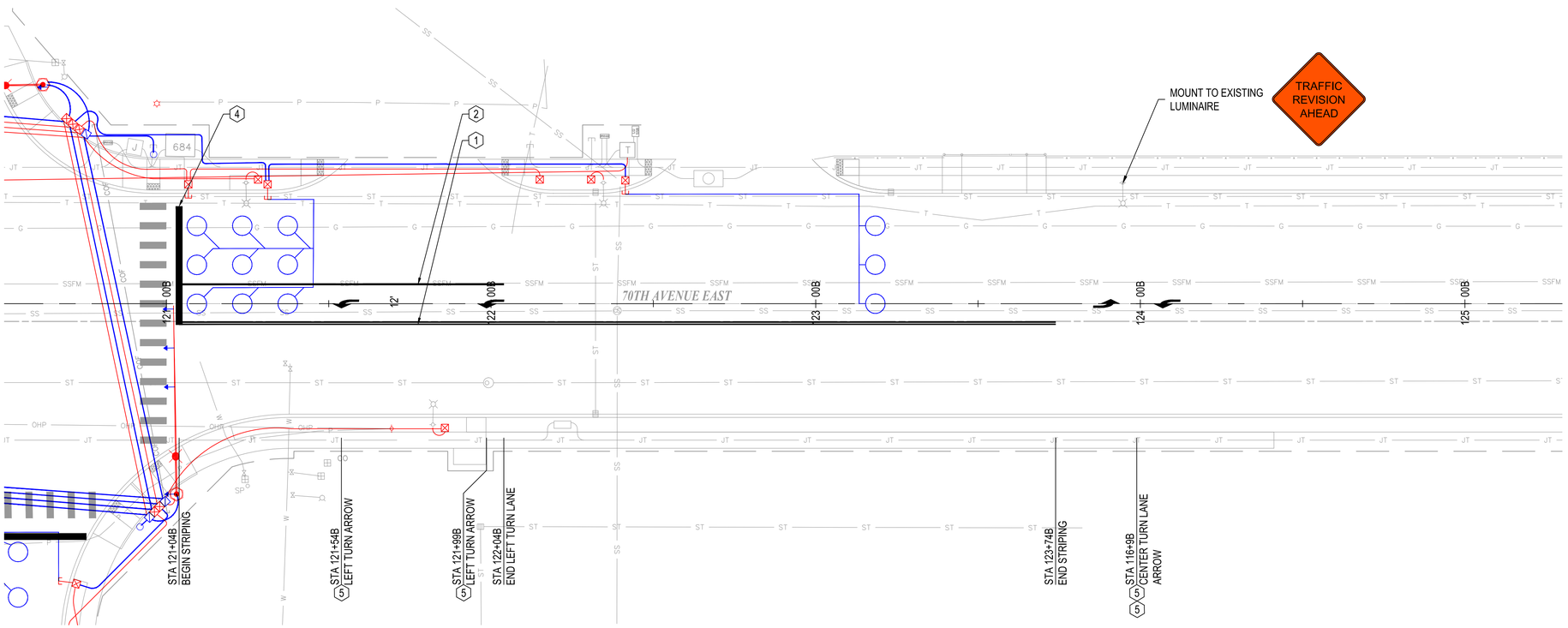

PLAN VIEW

1" = 20'

STRIPING & SIGNING NOTES

1) WIDTHS SHOWN ON PLANS ARE MEASURED FROM CENTER OF STRIPE, FEATURE OR FACE OF CURB.
2) REMOVE PAINT THAT CONFLICTS WITH NEW STRIPING.

STRIPING & SIGNING LEGEND

1	PAINT LINE	4" DOUBLE CENTERLINE YELLOW (4" GAP)
2	PAINT LINE	8" WIDE LANE LINE (WHITE)
3	PAINT LINE	4" EDGE LINE (WHITE)
4	PLASTIC LINE	24" STOP LINE (WHITE)
5	PLASTIC	TRAFFIC ARROW TYPE 2SR/2SL

VICINITY MAP

STATE OF WASHINGTON — NICHOLAS R. HOME — REGISTERED PROFESSIONAL ENGINEER — SIGNED: 09/15/16

STATE OF WASHINGTON — G. DILLARD — REGISTERED PROFESSIONAL ENGINEER — SIGNED: 09/15/16

RH2 ENGINEERING, INC.
www.rh2.com
TACOMA, WA 1.800.720.8052
930 Pacific Avenue, Suite 1220

CITY OF FIFE
70TH SIGNAL MODIFICATIONS

ROADWAY DELINEATION 1

ENGINEER: OAM | SAVE DATE: Sep 14, 2016 | CLIENT: FIFE | JOB NO.: 515-108
REVIEWED: ERH | PLOT DATE: Sep 15, 2016 | FILENAME: 66TH-D-SIGNAL.DWG

REVISIONS

NO.	DATE	DESCRIPTION	BY	REVIEW

SCALE: SHOWN

0" 1" 2"

DRAWING IS FULL SCALE WHEN BAR MEASURES 2"

DWG NO.: S06 | SHEET NO.: 8 / 12

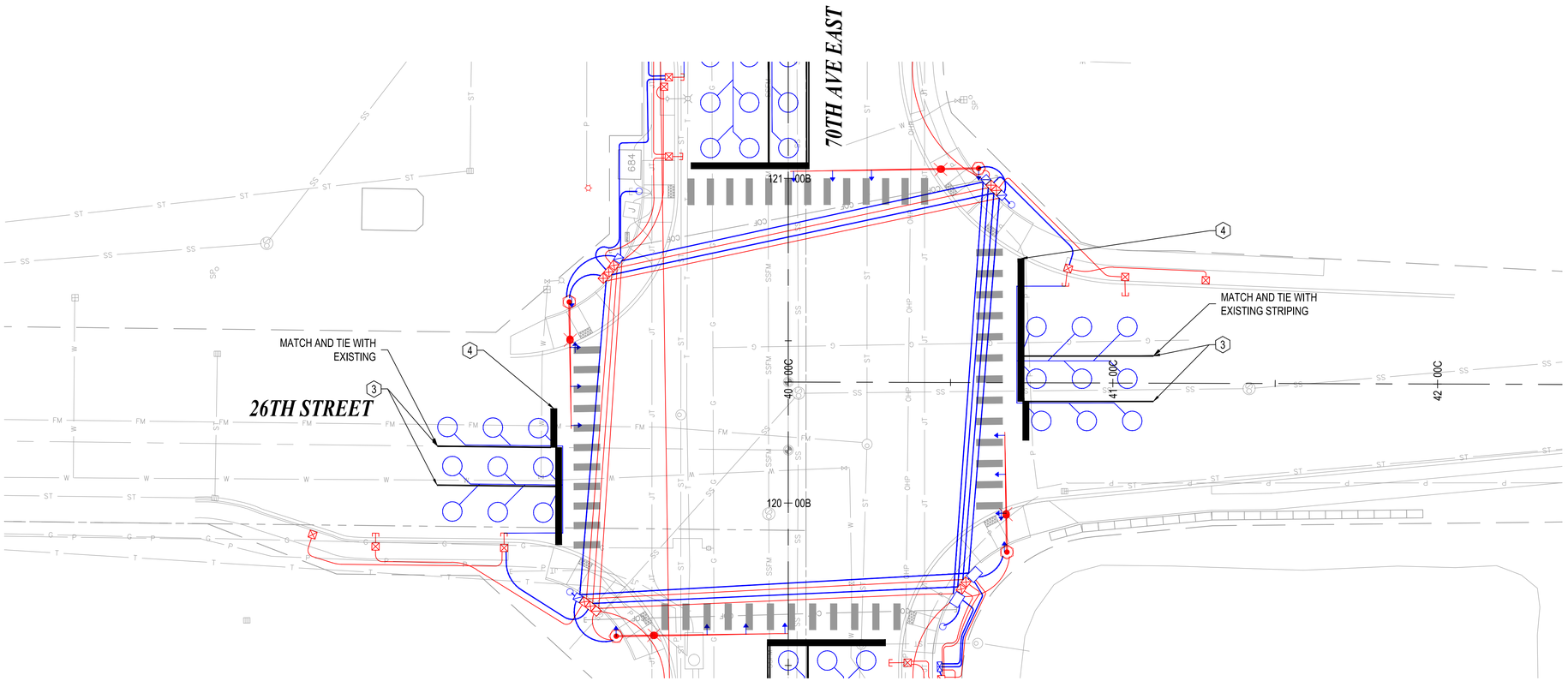

PLAN VIEW

1" = 20'

STRIPING & SIGNING NOTES

1) WIDTHS SHOWN ON PLANS ARE MEASURED FROM CENTER OF STRIPE, FEATURE OR FACE OF CURB.
2) REMOVE PAINT THAT CONFLICTS WITH NEW STRIPING.

STRIPING & SIGNING LEGEND

1	PAINT LINE	4" DOUBLE CENTERLINE YELLOW (4" GAP)
2	PAINT LINE	8" WIDE LANE LINE (WHITE)
3	PAINT LINE	4" EDGE LINE (WHITE)
4	PLASTIC LINE	24" STOP LINE (WHITE)
5	PLASTIC	TRAFFIC ARROW TYPE 2SR/2SL

VICINITY MAP

SIGNED: 09/15/16

SIGNED: 09/15/16

RH2 ENGINEERING, INC.
www.rh2.com
TACOMA, WA 1.800.720.8052
930 Pacific Avenue, Suite 1220

CITY OF FIFE
70TH SIGNAL MODIFICATIONS

ROADWAY DELINEATION 2

ENGINEER: OAM
REVIEWED: ERH
SAVE DATE: Sep 14, 2016
PLOT DATE: Sep 15, 2016
CLIENT: FIFE
FILENAME: 66TH-D-SIGNAL.DWG
JOB NO.: 515-108

REVISIONS

NO.	DATE	DESCRIPTION	BY	REVIEW

SCALE: SHOWN

0" 1" 2"

DRAWING IS FULL SCALE WHEN BAR MEASURES 2"

DWG NO.: S07

SHEET NO.: 9 / 12

BUFFER DATA

LONGITUDINAL BUFFER SPACE = B										
SPEED (MPH)	25	30	35	40	45	50	55	60	65	70
LENGTH (FEET)	155	200	250	305	360	425	495	570	645	–

BUFFER VEHICLE ROLL AHEAD DISTANCE = R	
TRANSPORTABLE ATTENUATOR: MINIMUM HOST VEHICLE WEIGHT 15,000 LBS. THE MAXIMUM WEIGHT SHALL BE IN ACCORDANCE WITH THE MANUFACTURERS RECOMMENDATION.	30 FEET MIN. TO 100 FEET MAX.
PROTECTIVE VEHICLE: MAY BE A WORK VEHICLE STRATEGICALLY LOCATED TO SHIELD THE WORK AREA.	NO SPECIFIED DISTANCE REQUIRED

MINIMUM LANE CLOSURE TAPER LENGTH = L (FEET)

LANE WIDTH (FEET)	POSTED SPEED (MPH)									
	25	30	35	40	45	50	55	60	65	70
10	105	150	205	270	450	500	550	–	–	–
11	115	165	225	295	495	550	605	660	–	–
12	125	180	245	320	540	600	660	720	–	–

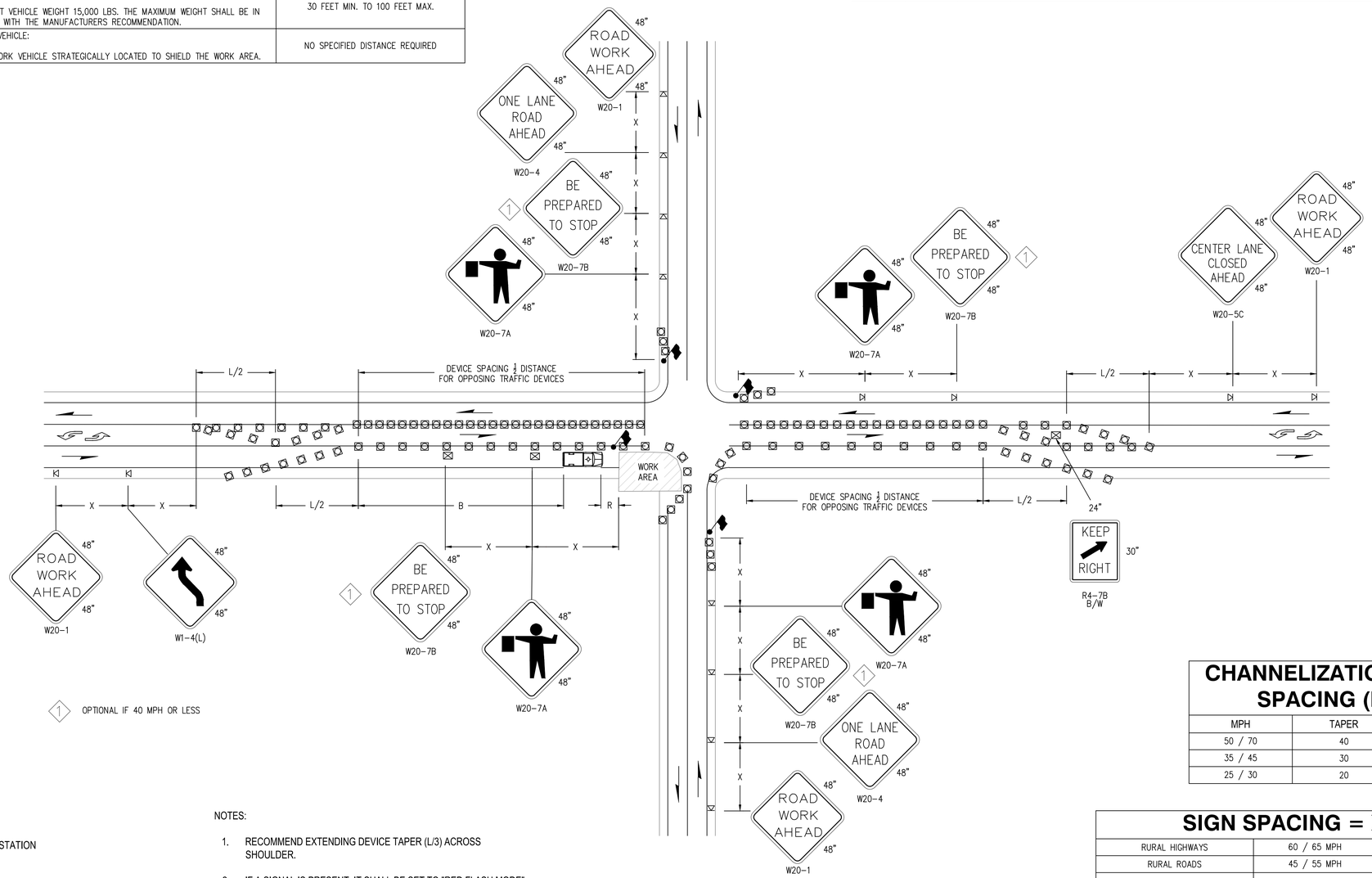

CHANNELIZATION DEVICE SPACING (FEET)

MPH	TAPER	TANGENT
50 / 70	40	80
35 / 45	30	60
25 / 30	20	40

SIGN SPACING = X(1)

RURAL HIGHWAYS	60 / 65 MPH	800'
RURAL ROADS	45 / 55 MPH	500'
RURAL ROADS & URBAN ARTERIALS	35 / 40 MPH	350'
RURAL ROADS, URBAN ARTERIALS, RESIDENTIAL & BUSINESS DISTRICTS	25 / 30 MPH	200' (2)
URBAN STREETS	25 MPH OR LESS	100' (2)

1. ALL SPACING MAY BE ADJUSTED TO ACCOMMODATE INTERCHANGE RAMPS, AT-GRADE INTERSECTIONS AND DRIVEWAYS.
2. THIS SPACING MAY BE REDUCED IN URBAN AREAS TO FIT ROADWAY CONDITIONS.

LEGEND

- FLAGGING STATION
- TEMPORARY SIGN LOCATION
- CHANNELIZING DEVICES
- PROTECTIVE VEHICLE - RECOMMENDED
- TEMPORARY SIGN LOCATION (5' MOUNTING HEIGHT)

NOTES:

1. RECOMMEND EXTENDING DEVICE TAPER (L/3) ACROSS SHOULDER.
2. IF A SIGNAL IS PRESENT, IT SHALL BE SET TO "RED FLASH MODE" OR TURNED OFF DURING FLAGGING OPERATIONS.
3. LAW ENFORCEMENT OFFICER MAY BE USED IN LIEU OF FLAGGERS TO CONTROL INTERSECTION TRAFFIC.
4. FOR SPEED LIMIT OF 30 MPH OR LESS USE SIGN W1-3 IN LIEU OF SIGN W1-4.
5. MAINTAIN A MINIMUM OF ONE ACCESS POINT FOR EACH BUSINESS WITHIN WORK AREA LIMITS.

INTERSECTION LANE CLOSURE - THREE LANE ROADWAY

NOT TO SCALE

SIGNED: 09/15/16

SIGNED: 09/15/16

RH2 ENGINEERING, INC.
TACOMA, WA
www.rh2.com
1.800.720.8052
930 Pacific Avenue, Suite 1220

CITY OF FIFE
70TH SIGNAL MODIFICATIONS

TRAFFIC CONTROL PLAN 1

ENGINEER: OAM | SAVE DATE: Sep 14, 2016 | CLIENT: FIFE | JOB NO.: 515-108
REVIEWED: ERH | PLOT DATE: Sep 15, 2016 | FILENAME: 66TH-P-TC-SIGNAL.DWG

REVISIONS

NO.	DATE	DESCRIPTION	BY	REVIEW

SCALE: SHOWN
0" 1" 2"
DRAWING IS FULL SCALE WHEN BAR MEASURES 2"

DWG NO.: TC1
SHEET NO.: 10 / 12

SIGN SPACING = X(1)

RURAL ROADS	45 / 55 MPH	500'
RURAL ROADS & URBAN ARTERIALS	35 / 40 MPH	350'
RURAL ROADS, URBAN ARTERIALS, RESIDENTIAL & BUSINESS DISTRICTS	25 / 30 MPH	200' (2)
URBAN STREETS	25 MPH OR LESS	100' (2)

1. ALL SPACING MAY BE ADJUSTED TO ACCOMMODATE INTERCHANGE RAMPS, AT-GRADE INTERSECTIONS AND DRIVEWAYS.
2. THIS SPACING MAY BE REDUCED IN URBAN AREAS TO FIT ROADWAY CONDITIONS.

MINIMUM LANE CLOSURE TAPER LENGTH = L (FEET)

LANE WIDTH (FEET)	POSTED SPEED (MPH)									
	25	30	35	40	45	50	55	60	65	70
10	105	150	205	270	450	500	–	–	–	–
11	115	165	225	295	495	550	–	–	–	–
12	125	180	245	320	540	600	–	–	–	–

CHANNELIZATION DEVICE SPACING (FEET)

MPH	TAPER	TANGENT
50	40	80
35 / 45	30	60
25 / 30	20	40

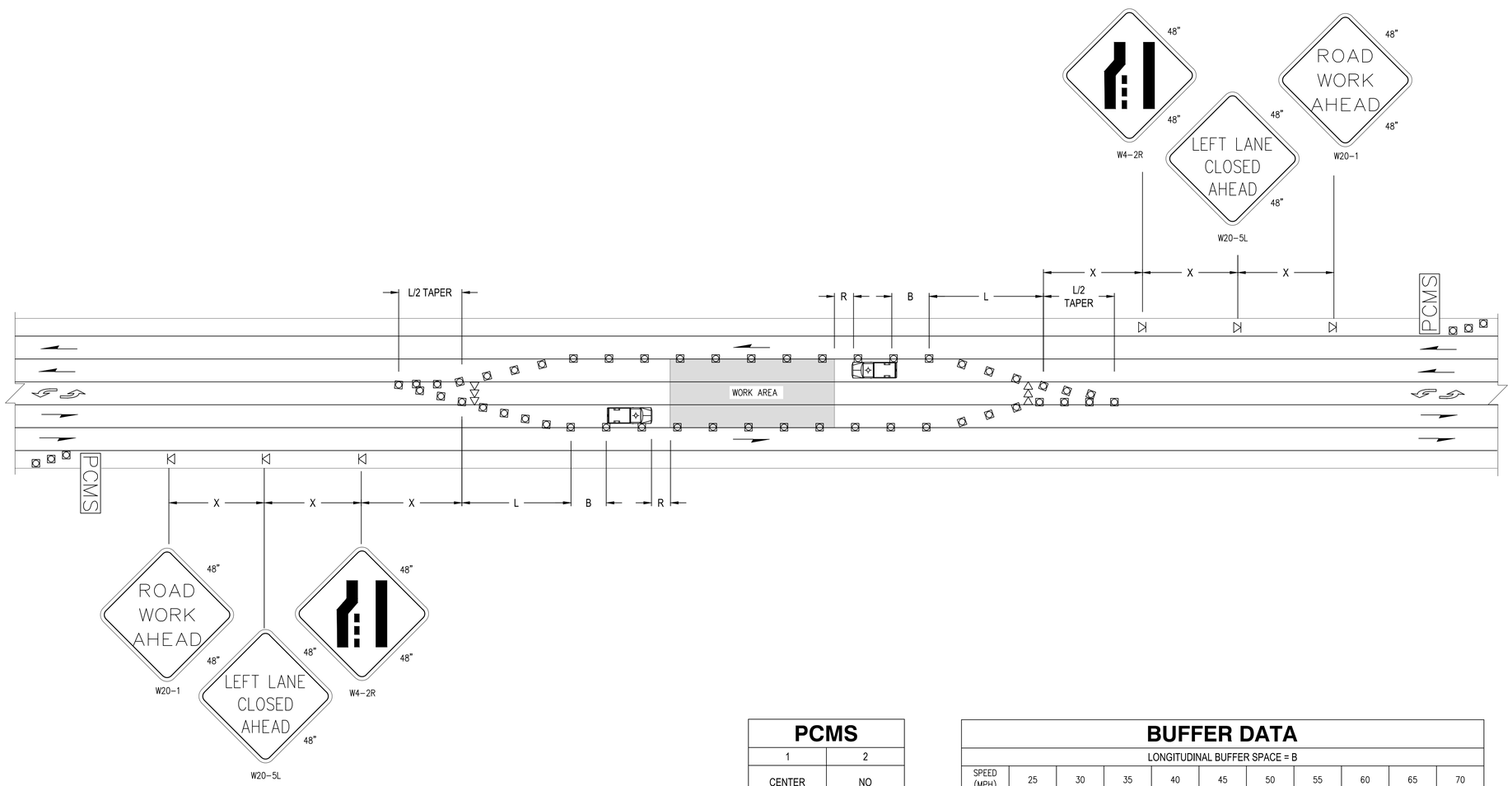

LEGEND

- TEMPORARY SIGN LOCATION
- CHANNELIZING DEVICES
- SEQUENTIAL ARROW SIGN
- PROTECTIVE VEHICLE

NOTES:

1. NO FLAGGER'S OR SPOTTERS.
2. ALL SIGNS ARE BLACK ON ORANGE.
3. SEE SPECIAL PROVISIONS FOR WORK HOUR RESTRICTIONS.

PCMS

1	2
CENTER LANE CLOSED	NO LEFT TURNING
2.0 SEC	2.0 SEC

FIELD LOCATE IN ADVANCE OF TEMPORARY SIGNS.

BUFFER DATA

LONGITUDINAL BUFFER SPACE = B										
SPEED (MPH)	25	30	35	40	45	50	55	60	65	70
LENGTH (FEET)	155	200	250	305	360	425	–	–	–	–

BUFFER VEHICLE ROLL AHEAD DISTANCE = R	
TRANSPORTABLE ATTENUATOR: MINIMUM HOST VEHICLE WEIGHT 15,000 LBS. THE MAXIMUM WEIGHT SHALL BE IN ACCORDANCE WITH THE MANUFACTURERS RECOMMENDATION.	30 FEET MIN. TO 100 FEET MAX.
PROTECTIVE VEHICLE: MAY BE A WORK VEHICLE STRATEGICALLY LOCATED TO SHIELD THE WORK AREA.	NO SPECIFIED DISTANCE REQUIRED

LEFT LANE AND CENTER TURN LANE CLOSURE - FIVE LANE ROADWAY

NOT TO SCALE

SIGNED: 09/15/16

SIGNED: 09/15/16

RH2 ENGINEERING, INC.
TACOMA, WA
www.rh2.com
1.800.720.8052
550 Pacific Avenue, Suite 1220

CITY OF FIFE

70TH SIGNAL MODIFICATIONS

TRAFFIC CONTROL PLAN 2

JOB NO.: 515-108

CLIENT: FIF

FILENAME: 66TH-P-TC-SIGNAL.DWG

ENGINEER: CAM

REVIEWED: ERH

SAVE DATE: Sep 14, 2016

PLOT DATE: Sep 15, 2016

REVISIONS

NO.	DATE	DESCRIPTION	BY	REVIEW

SCALE: SHOWN

0" 1" 2"

DRAWING IS FULL SCALE WHEN BAR MEASURES 2"

DWG NO.: TC2

SHEET NO.: 11 / 12

W20-1
36" x 36"

1

G20-2
36" x 18"

2

LEGEND

CLASS A CONSTRUCTION SIGN

CONSTRUCTION SIGNING PLAN

1" = 200'

SIGNED: 09/15/16

SIGNED: 09/15/16

RH2 ENGINEERING, INC.
www.rh2.com
TACOMA, WA
1.800.720.8052
930 Pacific Avenue, Suite 1220

CITY OF FIFE

70TH SIGNAL MODIFICATIONS

WORK ZONE TRAFFIC CONTROL - CLASS A SIGN PLAN

ENGINEER: OAM	JOB NO.: 515-108
REVIEWED: ERH	CLIENT: FIF
SAVE DATE: Sep 14, 2016	FILENAME: 66TH-P-CLASSA-SIGNAL.DWG
PLOT DATE: Sep 15, 2016	

REVISIONS

NO.	DATE	DESCRIPTION	BY	REVIEW

SCALE: SHOWN

0" 1" 2"

DRAWING IS FULL SCALE WHEN BAR MEASURES 2"

DWG NO.: WZ1

SHEET NO.: 12 / 12