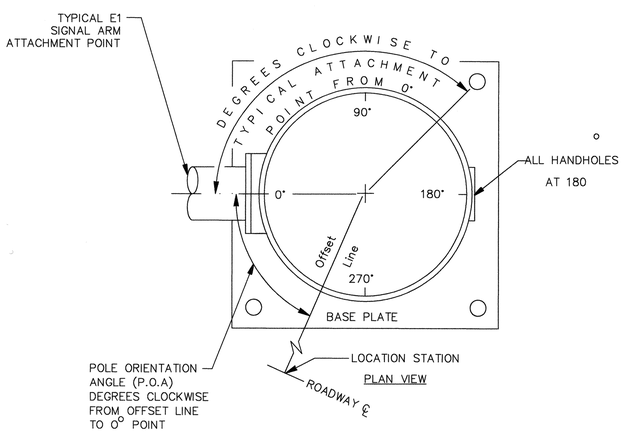

POLE ORIENTATION AND ATTACHMENT POINT DETAIL

NOTES

1. MOUNTING COUPLING INSTALLED BY FABRICATOR AT OFFSET DISTANCES INDICATED IN CHART. IF TYPE "N" MOUNTING IS USED, DRILL 1" HOLE IN MAST ARM AND INSTALL PLASTIC SPLIT BUSHING FOR CABLE ENTRANCE.
2. FIELD INSTALLED
3. SIGN/BUTTON HOUSING FRAME MOUNTED DIRECTLY TO POLE, FIELD DRILL AS REQUIRED.

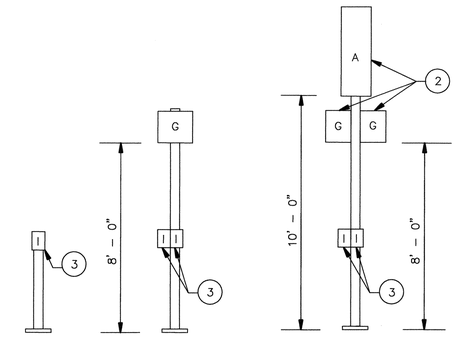

TYPE PPB
PPB POST

TYPE PS
PED. HEAD
STANDARD

TYPE I
VEHICLE HEAD
STANDARD

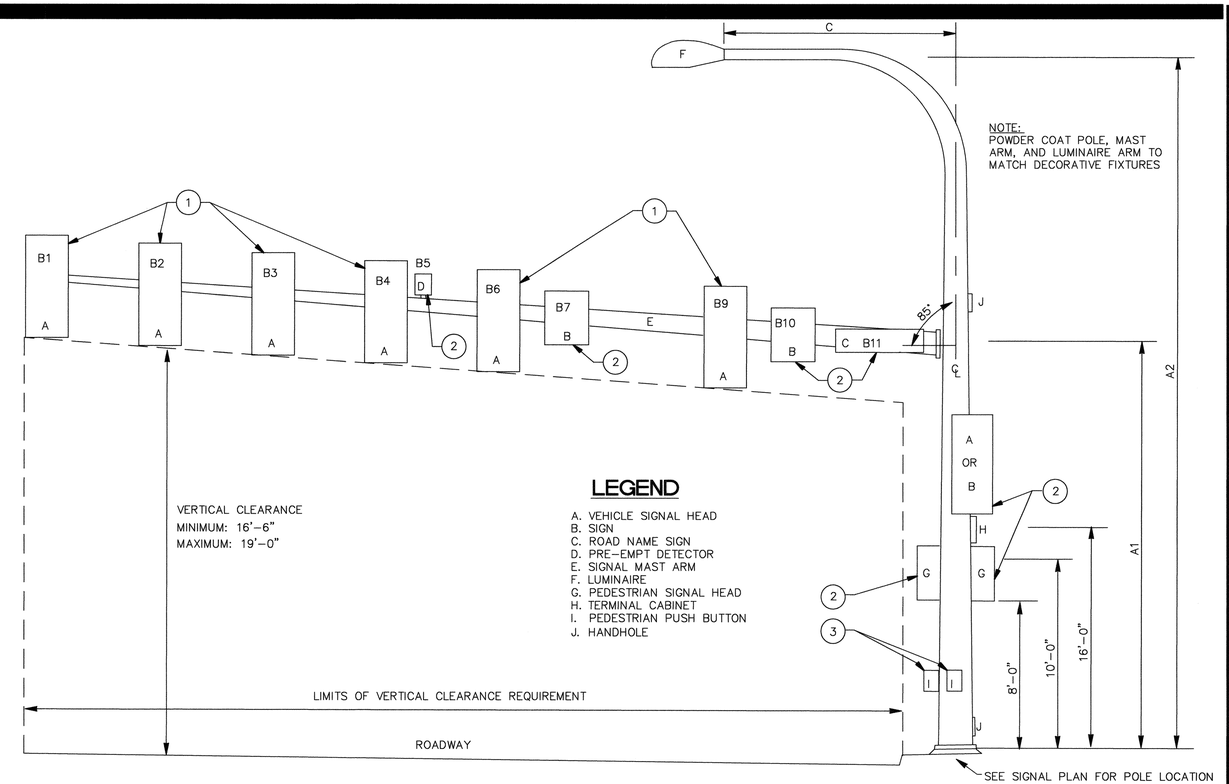

LEGEND

A. VEHICLE SIGNAL HEAD
B. SIGN
C. ROAD NAME SIGN
D. PRE-EMPT DETECTOR
E. SIGNAL MAST ARM
F. LUMINAIRE
G. PEDESTRIAN SIGNAL HEAD
H. TERMINAL CABINET
I. PEDESTRIAN PUSH BUTTON
J. HANDHOLE

TYPE II
MAST ARM
SIGNAL STANDARD

TYPE IV
STRAIN POLE
STANDARD

TYPE III
COMBINATION LIGHTING
AND MAST ARM
SIGNAL STANDARD

TYPE V
COMBINATION LIGHTING
AND STRAIN
POLE STANDARD

TYPE SD
SPECIAL DESIGN STANDARD

GORDON E. NELSON
STATE OF WASHINGTON
REGISTERED
PROFESSIONAL ENGINEER

RECORD DRAWING NOTE

THESE RECORD DRAWINGS HAVE BEEN COMPILED BY DAVID EVANS AND ASSOCIATES, INC. (DEA) BASED ON FIELD CHANGES, INFORMATION INCLUDED IN CONSTRUCTION CHANGE ORDERS, AND SURVEY INFORMATION. THE LINED OUT PORTIONS OF THESE DRAWINGS REPRESENT CHANGES TO THE APPROVED PLANS. THESE DRAWINGS DO NOT REPRESENT A SURVEY OF ALL PROJECT IMPROVEMENTS INCLUDED IN THE CONTRACT PLANS.

THESE RECORD DRAWINGS ACCURATELY REFLECT FIELD CONDITIONS AS OF THIS DATE: 1-22-14

SIGNAL STANDARD DETAIL CHART

STD. No.	FIELD LOCATION					POLE TYPE	MOUNTING HEIGHT(FT)		SIGNAL MAST ARM DATA															LUMINAIRE ARM(FT)	POLE ATTACHMENT POINT ANGLES (deg)								FOUNDATION DEPTHS(FT)	REMARKS
									OFFSET DISTANCES (FT) (Z) (POLE ℄ TO ATTACHMENT POINT)								WINDLOAD AREAS $(FT)^2$ (X)(Y)							(X)(Y)(Z) TOTAL$(FT)^3$											
	STATION**	OFFSET**	LT.	RT.	P.O.A.		A1	A2	B1	B2	B3	B4	B5	B6	B9	B11	B1	B2	B3	B4	B6	B9	B11		C	E	F	A/B	G1	G2	H	I1	I2	3'RD.	
1	141+06	56'	X		90	III	18.5	40	52		44		48	35		26	9.2		9.2		14.4		6	1544	16	0	0		0		135	0		11	
1A	140+92	69'	X		0	PS																							TOP			0			
2	141+16	58'		X	0	III	18	40	63		41		55	29		19	9.2		9.2		9.2		6	1338	16	0	0		270		135	270		9	
2A	141+04	71'		X	0	PS																													
3	140+05	71'		X	90	III	19	40	47		39		43	30		16	9.2		9.2		14.4		6	1320	16	0	0		270		135	270		9	
3A	139+89	55'		X	0	PS																													
4	139+91	57'	X		0	III	18	40	62		51		45	38	26	16	9.2		9.2		9.2	9.2	6	1725	16	0	0		270		135	270		11	
4A	140+03	69'	X		0	PS																													

* FUTURE SIGNAL HEADS; PLUG AND CAP TENON
** SEE DETAIL ON SHEET SG-07 FOR LOCATION OF POLE IN RELATIONSHIP TO CURB RAMP

RECORD DRAWING

PROJECT ENGINEER:	A. TEBALDI
DESIGNED BY:	A. TEBALDI, G. NELSON
DRAWN BY:	S. HICKS, J. KIRKMAN, B. MORRIS
CHECKED BY:	L. ONORATI, M. CLARK
DATE PLOTTED:	JULY 2012
FILE:	TTSG006FIFE00000165.DWG

DATE	REVISIONS	APPRVD.

ALAN M. TEBALDI
STATE OF WASHINGTON
20436
REGISTERED
PROFESSIONAL ENGINEER

City of Fife
Department of Public Works
5411-23rd Street East
Fife, Washington 98424

PLANS PREPARED BY:
DAVID EVANS AND ASSOCIATES INC.
3700 Pacific Hwy. East, Suite 311
Fife, Washington 98424
Phone: 253.922.9780

CITY OF FIFE
70TH AVENUE EAST - PHASE 2
INTERSECTION OF AND 70TH AVE E AND 20TH ST E

TRAFFIC SIGNAL POLE DETAIL PLAN

SHEET SG-6
139 OF 192

jkto 01/22/14 3:30pm – P:\K\FIFE00000165\0400CAD\TT\Dwg\RECORD DRAWINGS\08 Traffic Signal Plans\TTSG006FIFE00000165.DWG