DRAWN BY: LISA CYFORD

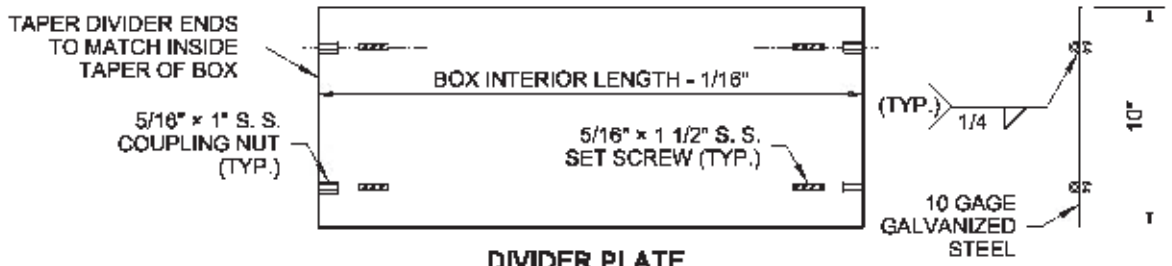

DIVIDER PLATE

ELEVATION VIEW

(FOR TYPE 2 JUNCTION BOX ONLY)

MARK	ITEM	BOX TYPE	
		TYPE 1	TYPE 2
A	OUTSIDE LENGTH OF JUNCTION BOX	22"	33"
B	OUTSIDE WIDTH OF JUNCTION BOX	17"	22 1/2"
C	INSIDE LENGTH OF JUNCTION BOX	18" ~ 19"	28" ~ 29"
D	INSIDE WIDTH OF JUNCTION BOX	13" ~ 14"	17" ~ 18"
E	LID LENGTH	17 5/8"	28 5/8"
F	LID WIDTH	12 5/8"	18 1/8"
	CAPACITY ~ CONDUIT DIAMETER	6"	12"

JUNCTION BOX DIMENSION TABLE

NOTES

1. All box dimensions are approximate. Exact configurations vary among manufacturers.
2. Minimum lid thickness shown. The diamond pattern shall be a minimum of 28% of the overall thickness. Junction Boxes installed in sidewalks, walkways, and shared-use paths shall have a slip-resistant coating on the lid and lip cover plate, and shall be installed with the surface flush with and matched to the grade of the sidewalk, walkway, or shared-use path. The non-slip lid shall be identified with permanent markings on the underside, indicating the type of surface treatment (see Contract Documents for details) and the year of manufacture. The permanent marking shall be 1/8" inch line thickness formed with a stainless steel weld bead and shall be placed prior to hot-dip galvanizing.
3. Lid support members shall be 3/16" minimum thick steel C, L, or T shape, welded to the frame.
4. A 1/4-20 NC × 3/4" stainless steel ground stud shall be welded to the bottom of the lid; include (2) stainless steel nuts and (2) stainless steel flat washers.
5. Bolts and nuts shall be liberally coated with anti-seize compound.
6. Equipment Bonding Jumper shall be # 8 AWG min. × 4' of tinned braided copper.
7. The System Identification letters shall be 1/8" line thickness formed by engraving, stamping, or with a S. S. weld bead. See Cover Marking detail. Grind off diamond pattern before forming letters. For System Identification details, see **Standard Specification 9-29.2(4).**
8. When required in the Contract, provide a 10" x 27 1/2", 10 gage divider plate, complete, with fasteners, in each Type 2 Junction Box where specified.
9. When required in Contract, provide a 12" deep extension for each Type 2 Junction Box where specified.
10. See the Standard Specifications for alternative reinforcement and class of concrete.
11. Headed Anchor Shear Studs must be welded to the Steel Cover Lip Plate and wire tied in two places to the vertical Welded Reinforcement Wire when in contact with each other. Wire tie all other Headed Anchor Shear Studs to the horizontal Welded Reinforcement Wire.
12. Lid Bolt Down Attachment Tab provides a method of retrofitting by using a mechanical process in lieu of welding. Attachment Tab shown depicts a typical component arrangement; actual configurations of assembly will vary among manufacturers. See approved manufacturers' shop drawings for specifics.
13. Unless otherwise noted in the plans or approved by the Engineer, Junction Boxes, Cable Vaults, and Pull Boxes shall not be placed within the sidewalks, walkways, shared use paths, traveled ways or paved shoulders. All Junction Boxes, Cable Vaults, and Pull Boxes placed within the traveled way or paved shoulders shall be Heavy-Duty.
14. Distance between the top of the conduit and the bottom of the Junction Box lid shall be 6" min. to 8" max. for final grade of new construction only. See **Standard Specification 8-20.3(5).** Where adjustments are to be made to existing Junction Boxes, or for interim construction stages during the contract, the limits shall be from 6" min. to 10" max. See **Standard Specification 8-20.3(6).**

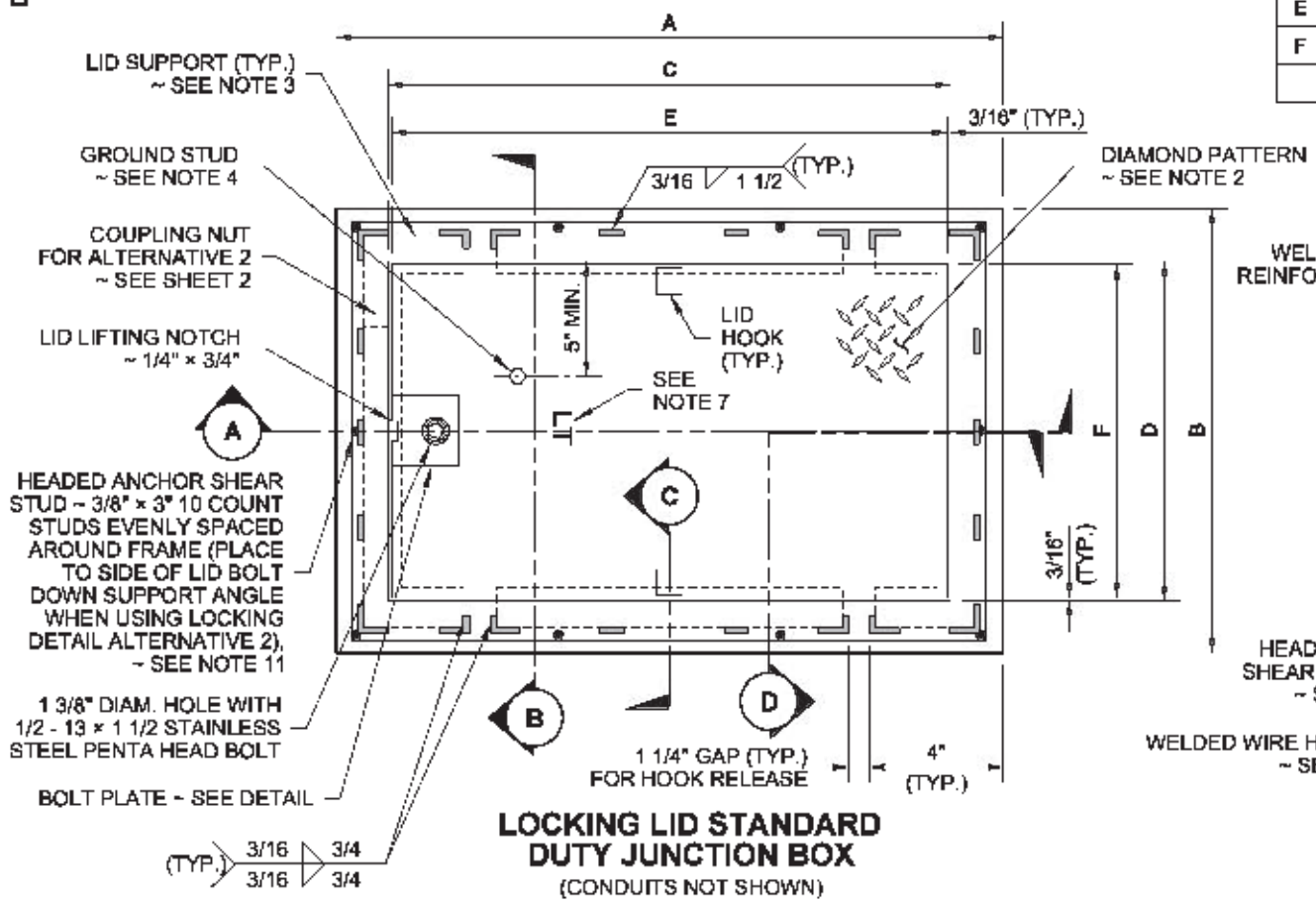

LOCKING LID STANDARD DUTY JUNCTION BOX

(CONDUITS NOT SHOWN)

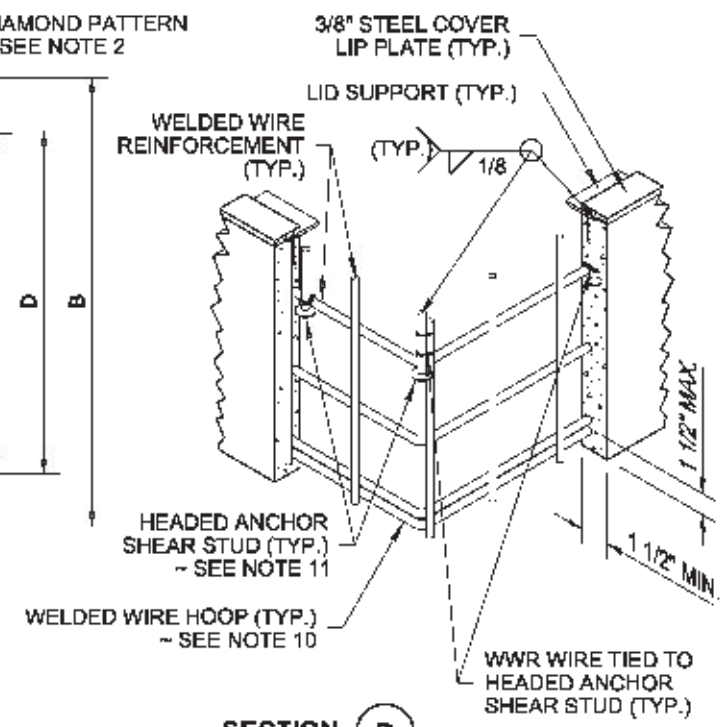

SECTION (D)

PERSPECTIVE VIEW

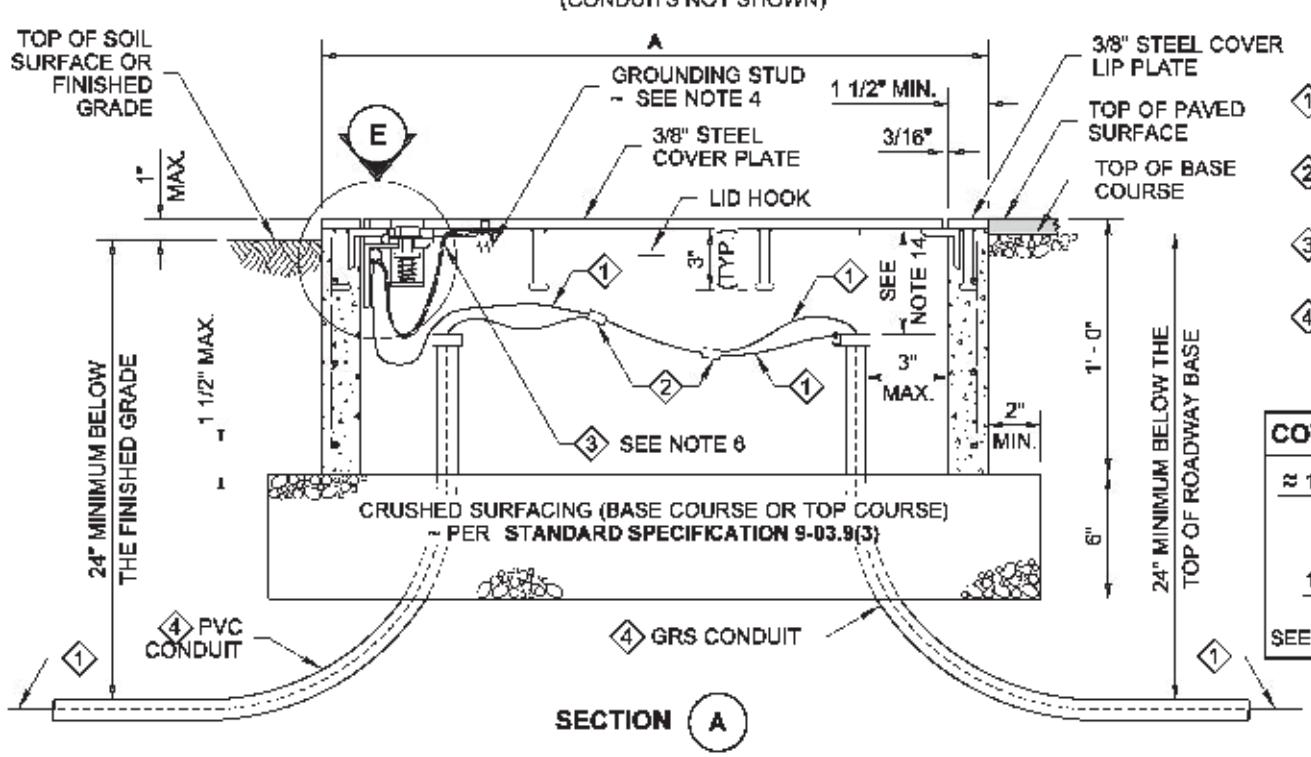

SECTION (A)

1. Equipment Grounding Conductor
2. Copper Solderless Crimp Connector
3. Equipment Bonding Jumper ~ see note 6
4. See Contract for conduit size and number

COVER MARKING DETAIL

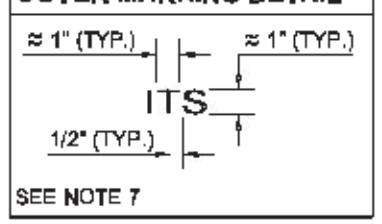

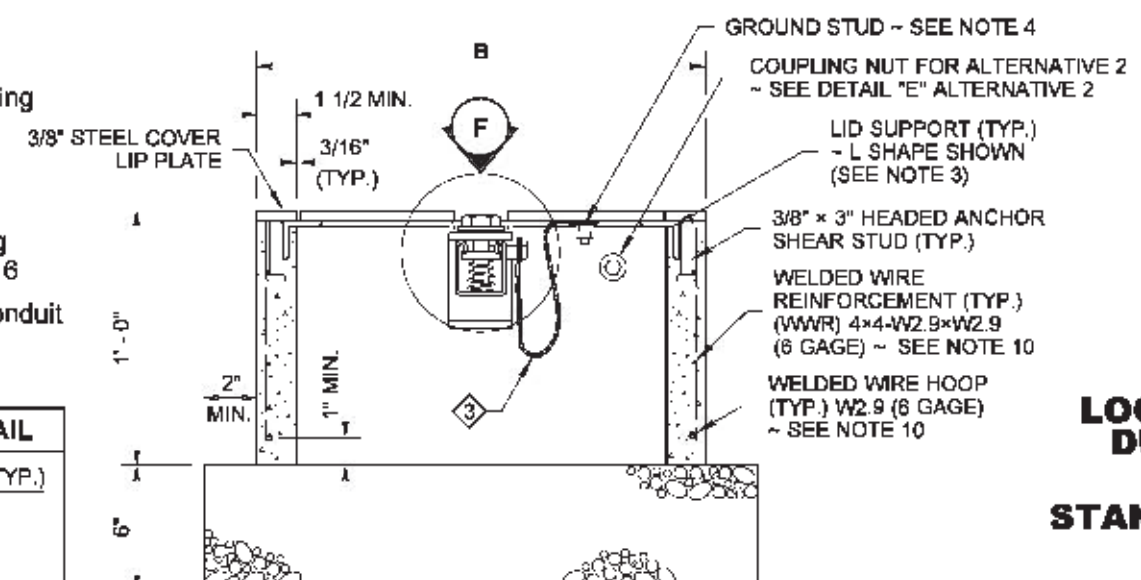

SECTION (B)

(CONDUITS NOT SHOWN)

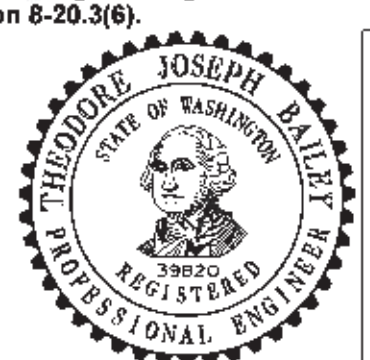

NOTE: THIS PLAN IS NOT A LEGAL ENGINEERING DOCUMENT BUT AN ELECTRONIC DUPLICATE. THE ORIGINAL, SIGNED BY THE ENGINEER, AND APPROVED FOR PUBLICATION, IS KEPT ON FILE AT THE WASHINGTON STATE DEPARTMENT OF TRANSPORTATION. A COPY MAY BE OBTAINED UPON REQUEST.

LOCKING LID STANDARD DUTY JUNCTION BOX TYPES 1 & 2

STANDARD PLAN J-40.10-03

SHEET 1 OF 2 SHEETS

APPROVED FOR PUBLICATION

Pasco Bakotich III — STATE DESIGN ENGINEER — *5/20/13* — DATE

Washington State Department of Transportation

DRAWN BY: LISA CYFORD

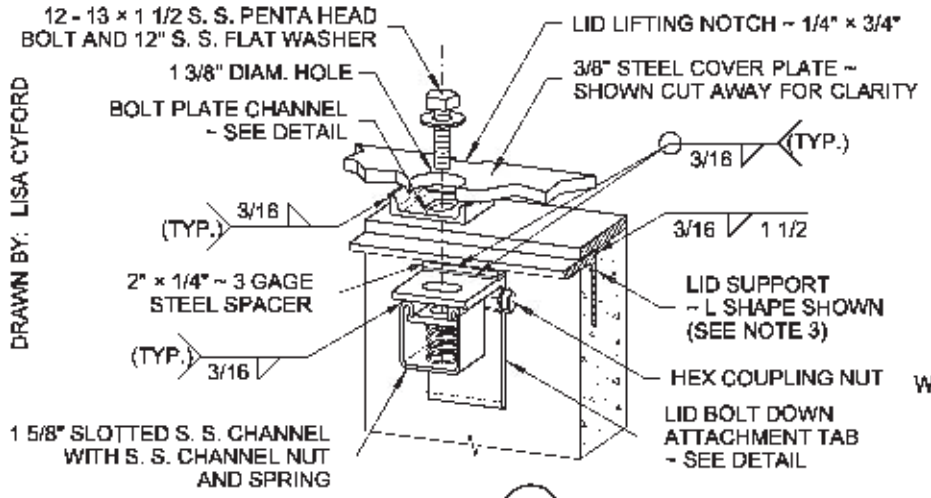

DETAIL (F)

ALTERNATIVE 1 SHOWN PERSPECTIVE VIEW

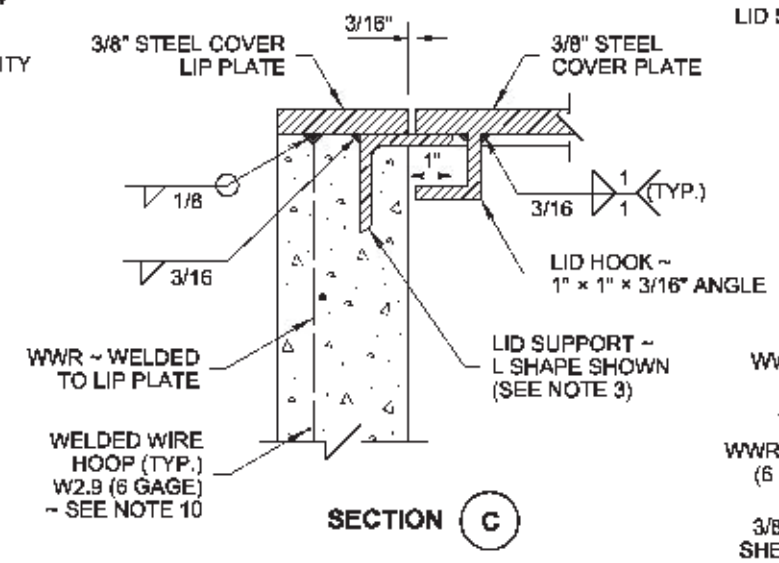

SECTION (C)

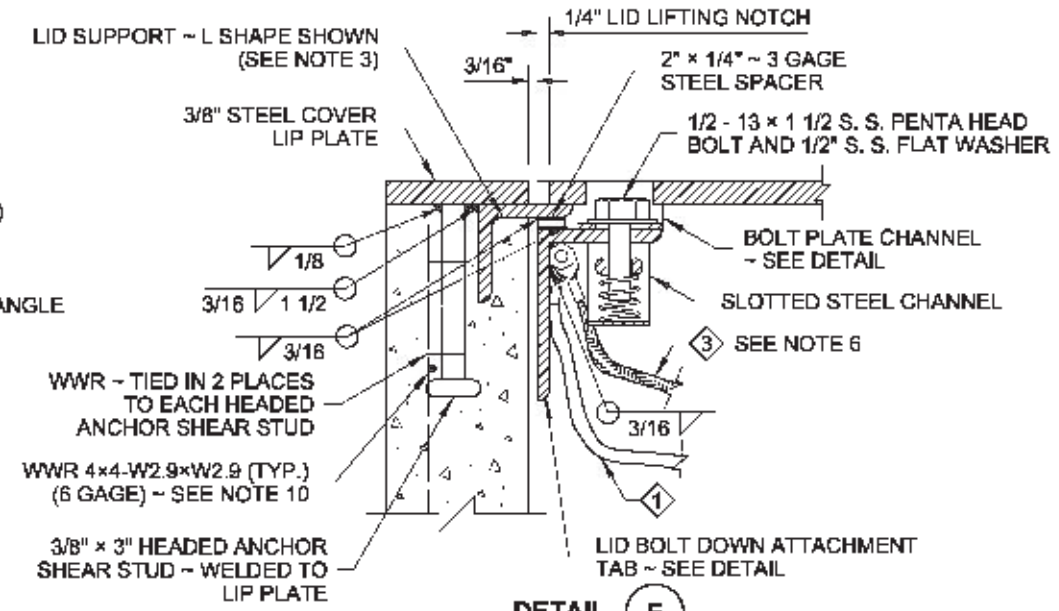

DETAIL (E)

ALTERNATIVE 1 SHOWN

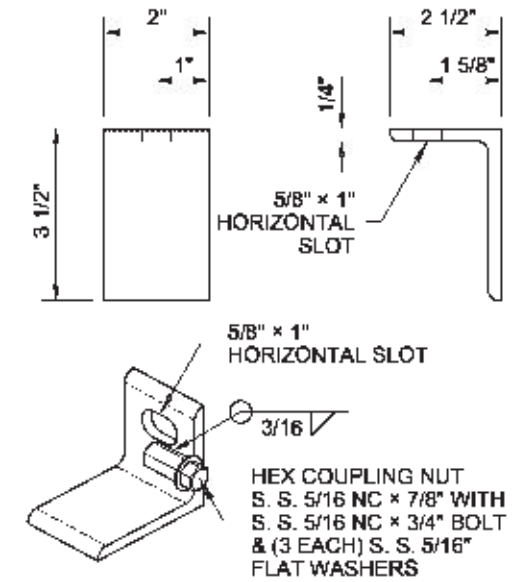

ALTERNATIVE 1
LID BOLT DOWN ATTACHMENT TAB
(SEE NOTE 12)

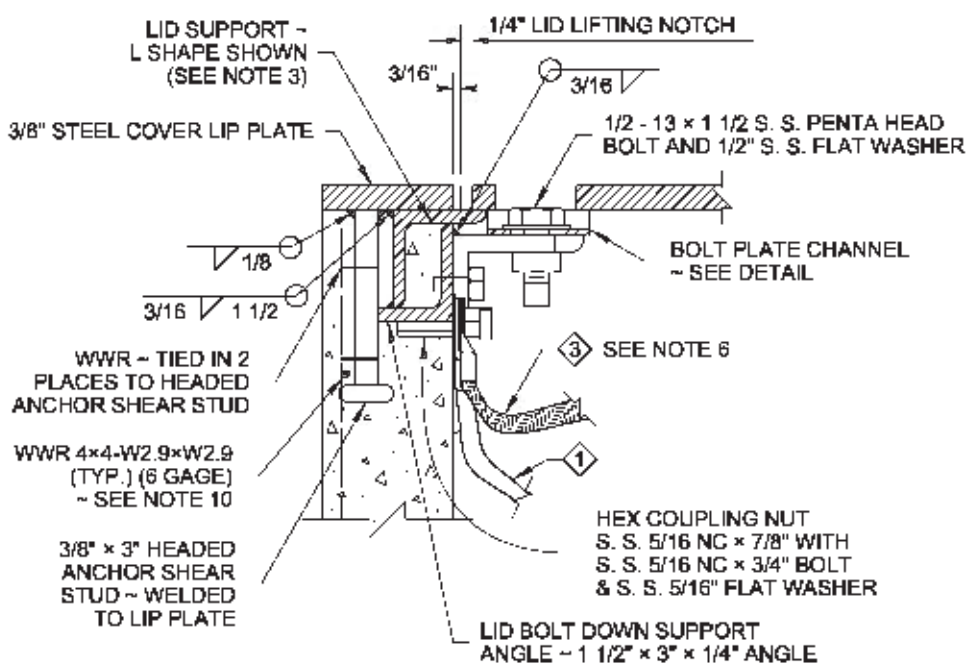

DETAIL (E)

ALTERNATIVE 2 SHOWN

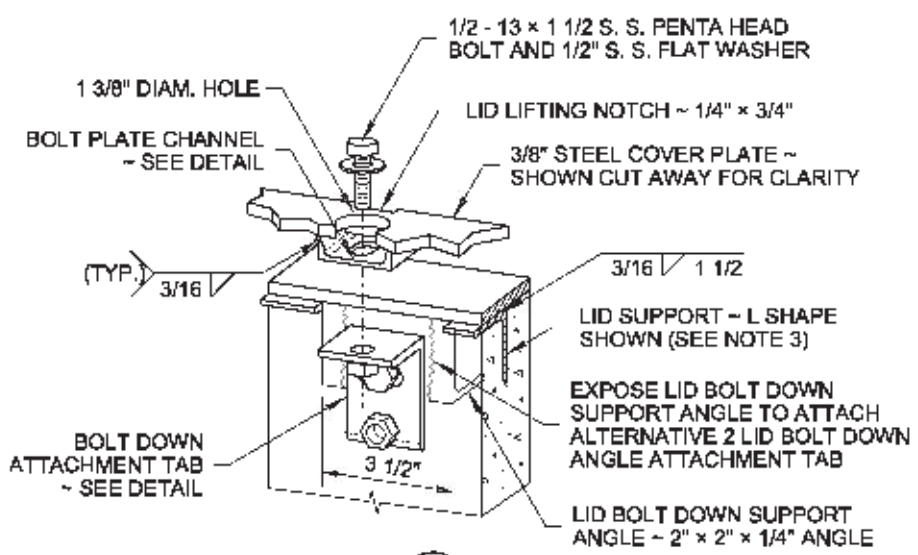

DETAIL (F)

ALTERNATIVE 2 SHOWN PERSPECTIVE VIEW

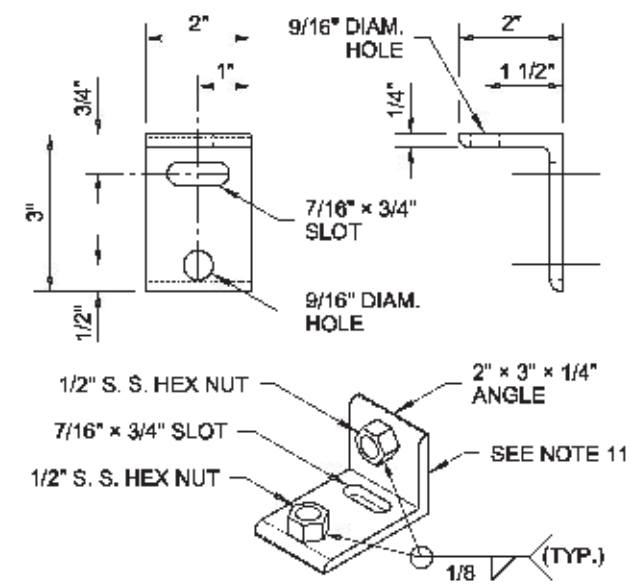

ALTERNATIVE 2
LID BOLT DOWN ATTACHMENT TAB
(SEE NOTE 12)

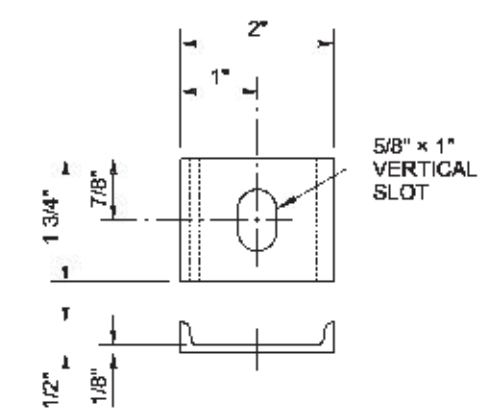

BOLT PLATE CHANNEL

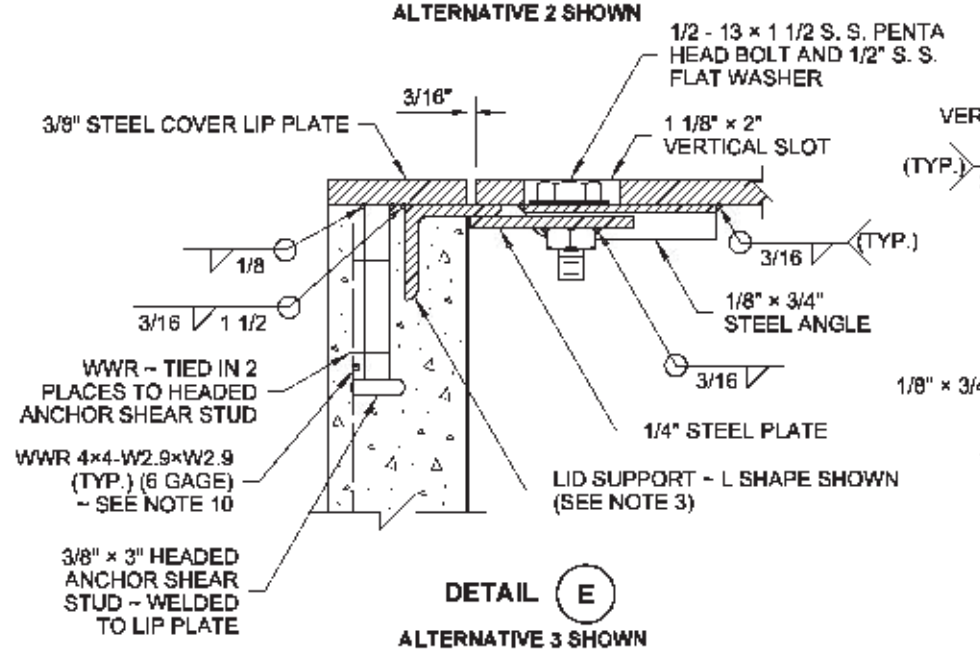

DETAIL (E)

ALTERNATIVE 3 SHOWN

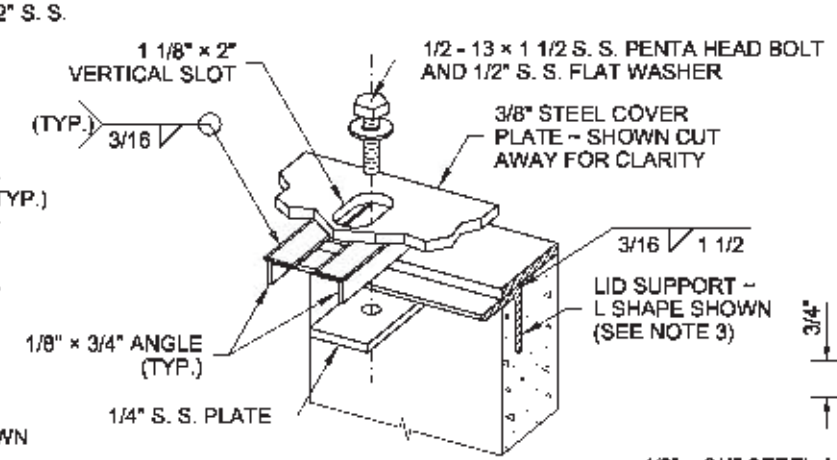

DETAIL (F)

ALTERNATIVE 3 SHOWN PERSPECTIVE VIEW

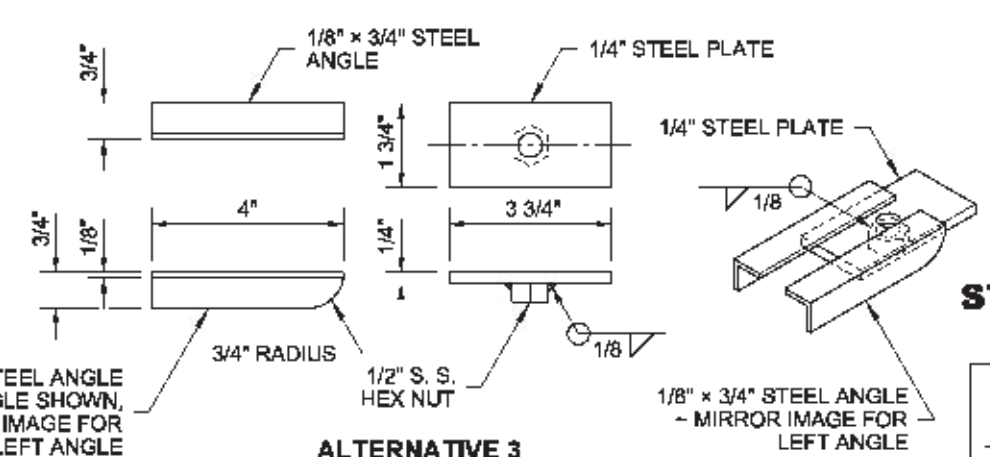

ALTERNATIVE 3
LID BOLT DOWN ATTACHMENT TAB
(SEE NOTE 12)

NOTE: THIS PLAN IS NOT A LEGAL ENGINEERING DOCUMENT BUT AN ELECTRONIC DUPLICATE. THE ORIGINAL, SIGNED BY THE ENGINEER, AND APPROVED FOR PUBLICATION, IS KEPT ON FILE AT THE WASHINGTON STATE DEPARTMENT OF TRANSPORTATION. A COPY MAY BE OBTAINED UPON REQUEST.

LOCKING LID STANDARD DUTY JUNCTION BOX TYPES 1 & 2

STANDARD PLAN J-40.10-03

SHEET 2 OF 2 SHEETS

APPROVED FOR PUBLICATION

Pasco Bakotich III — 5/20/13

STATE DESIGN ENGINEER — DATE

Washington State Department of Transportation