## REINFORCING STEEL BENDING DIAGRAM

SEE **STD. SPEC. 9-07.1(2)** FOR BENDING DIAM.

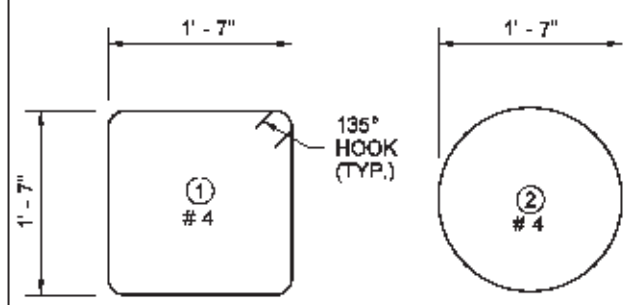


DIMENSIONS ARE OUT TO OUT

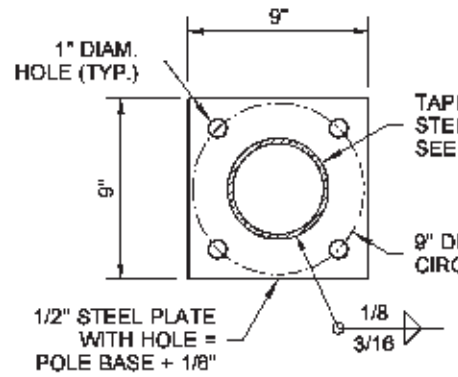


**BASE PLATE DETAIL**

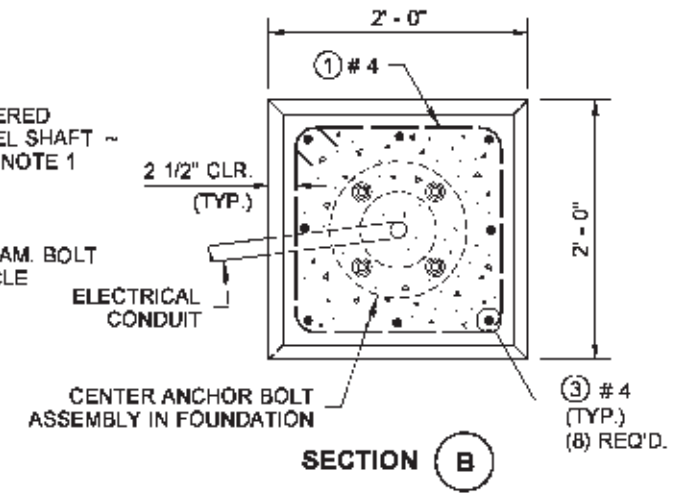


**SECTION (B)**

## NOTES

1. Steel Shaft shall be tapered either round or dodecagon (12-sided), 11-gauge, 4 1/2" O.D. at slipfitter. Taper shall be 0.14 inches per foot.
2. Hand Holes shall include a removable, rain-tight cover and gasket, fastened with two stainless steel screws (ASTM F 593).
3. Clamping Bolts shall be tightened to 50 ft-lbs max. torque. After state inspection, burr threads to prevent nut rotation. DO NOT OVERTIGHTEN.
4. The final height of the Anchor Bolts must be below the top of the Slip Plate Assembly to ensure proper function of the Slip Base.
5. All Poles shall be hot dip galvanized per AASHTO M111.
6. Supplemental Grounding Conductor shall be non-insulated #4 AWG stranded copper, provide 3' - 0" min. slack. Clamp to vertical steel reinforcing bar with connector suitable for use embedded in concrete.
7. Junction Box serving the Standard shall preferably be located 5' - 0" (10' - 0" Max.) from the Standard.
8. Provide Cable Tie at wiring entering the Junction Box (for Slip Base installations only) ~ See **Detail A, Standard Plan J-28.70**.

DRAWN BY: FERN LIDDELL

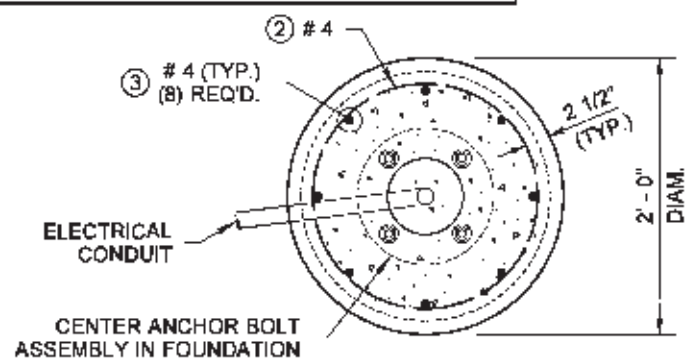


**SECTION (A)**

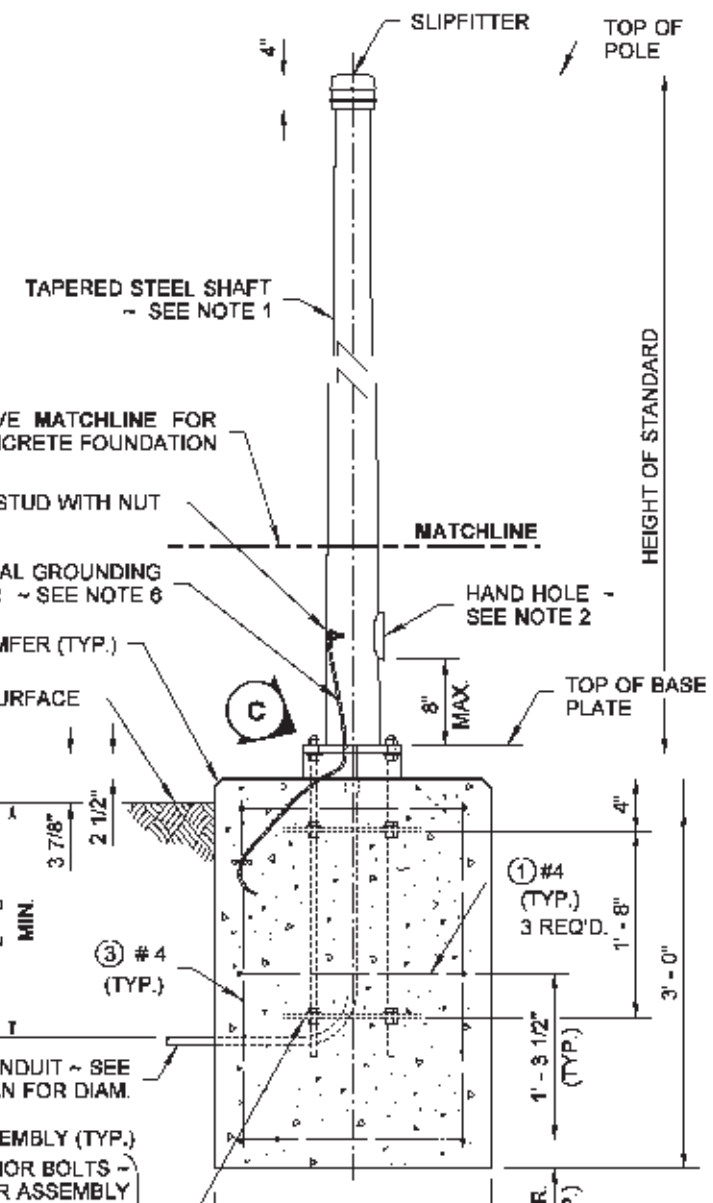


ELEVATION
**SQUARE CONCRETE FOUNDATION DETAIL**

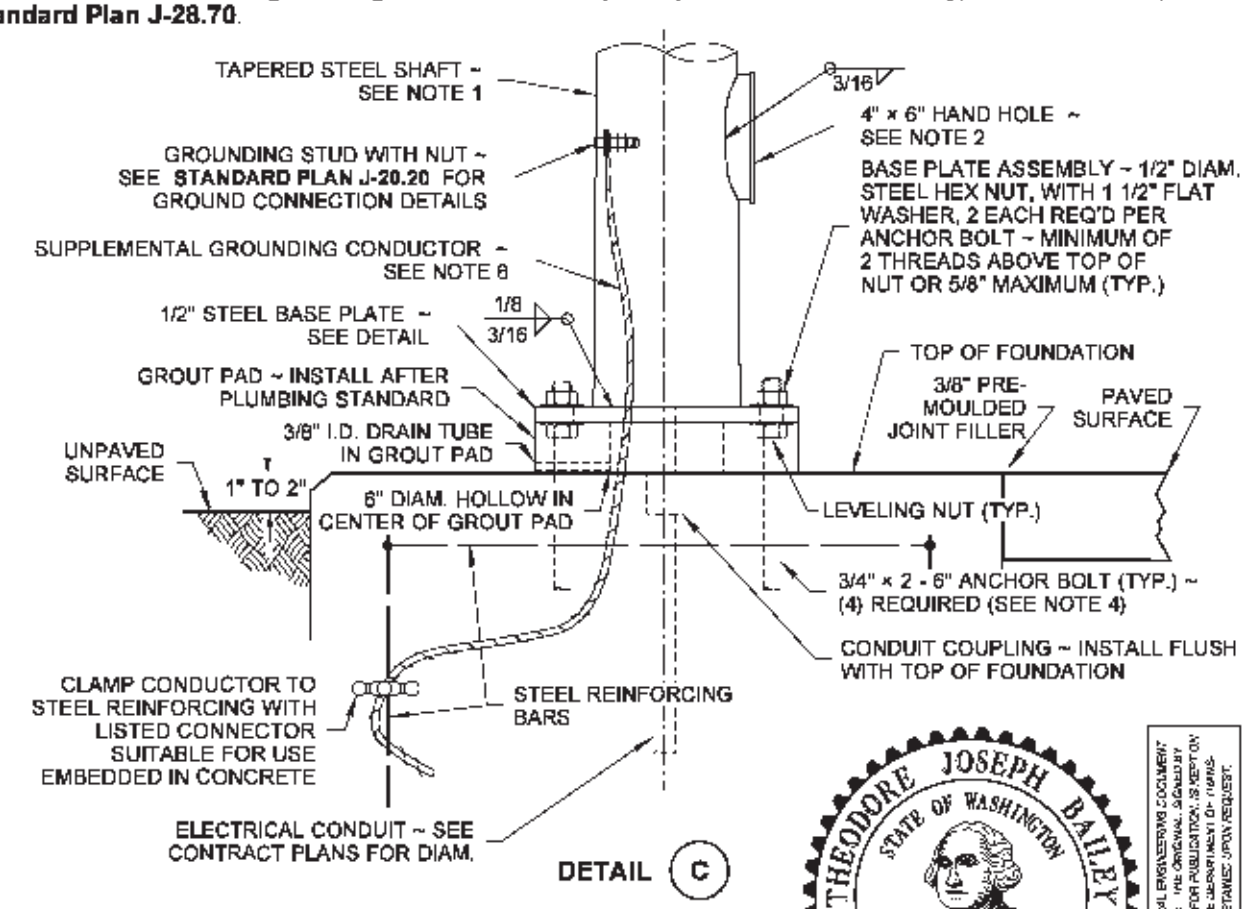


**DETAIL (C)**

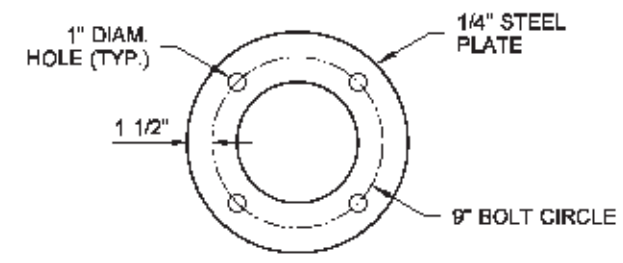


**ANCHOR BOLT TEMPLATE**

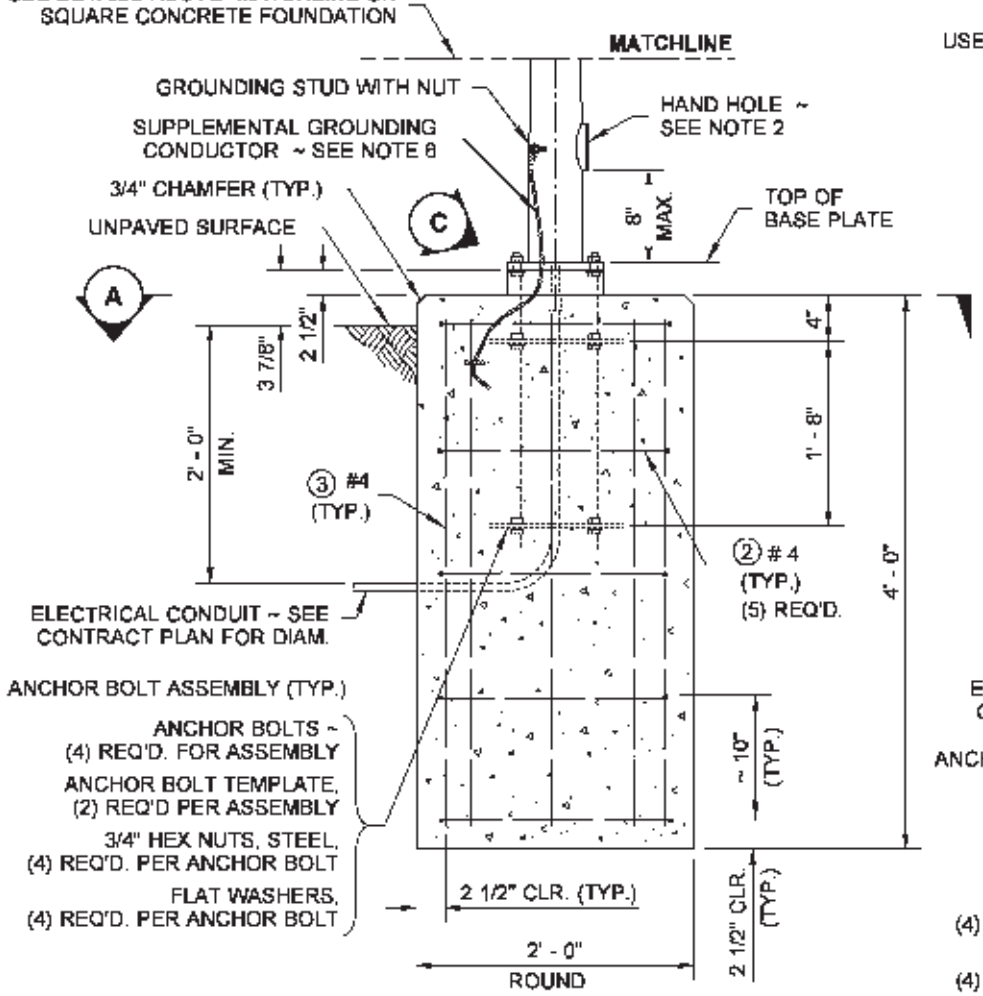


ELEVATION
**ROUND CONCRETE FOUNDATION DETAIL**

**FIXED BASE**

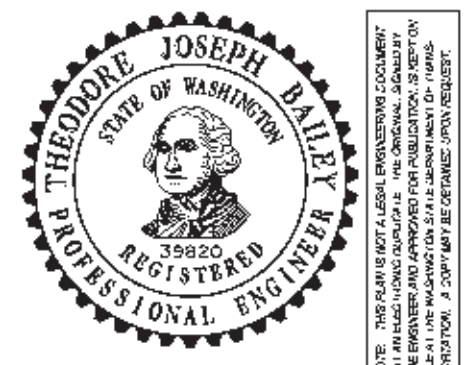


NOTE: THIS PLAN IS NOT A LEGAL ENGINEERING DOCUMENT UNLESS BEARING THE ORIGINAL SIGNATURE OF THE ENGINEER AND APPROVED FOR PUBLICATION. IT IS KEPT ON FILE AT THE WASHINGTON STATE DEPARTMENT OF TRANSPORTATION. A COPY MAY BE OBTAINED UPON REQUEST.

# TYPE PS, TYPE 1, RM & FB SIGNAL STANDARD FOUNDATION DETAILS

## STANDARD PLAN J-21.10-03

SHEET 1 OF 2 SHEETS

APPROVED FOR PUBLICATION

*Pasco Bakotich III* — STATE DESIGN ENGINEER

*6/10/13* — DATE

Washington State Department of Transportation